September 8, 2020
4:30 p.m.
Conference Call:
1-929-205-6099
Access Code: 300611887

COMMITTEE ON WAYS AND MEANS

1. Invocation – Councilmember Appel

2. Approval of Minutes:

   July 28, 2020

   August 18, 2020

3. Bids and Purchases

4. Planning Preservation and Sustainability (Business and Neighborhood Services): Approval of Memorandum of Understanding between City and LDC for management and administration of the EDA CARES Act Revolving Loan Fund and authorization for Mayor to sign any additional documentation required by EDA for implementation of the Revolving Loan Fund. ***(To be sent under separate cover by the Legal Department)***

5. Budget Finance and Revenue Collections: Approval of the Second Amendment to the contract with JLA in the amount of $100,000 to act as the City's representative during the design and construction of the Magnolia PUD. The scope of the services is to act as an approved reviewing consultant for the City of Charleston. As the reviewing consultant, JLA will assist with the review of construction documents, shop drawings and pay request. They will also assist with the observation of construction to verify that it is satisfactory with project requirements. JLA will also attend construction site meetings. All final approvals will be made by the City. The previous amendment to this contract ended May 2020. Fees will be paid from the Charleston Neck TIF.

6. Budget Finance and Revenue Collections: A Supplemental Ordinance providing for the issuance and sale of one or more series of City of Charleston, South Carolina, Stormwater System Refunding Revenue Bonds; and other matters relating thereto.

7. Police Department: Approval of a Memorandum of Understanding between the CPD and the United States Department of Justice, Drug Enforcement Administration regarding CPD's participation in the DEA's Charleston Resident Office Task Force.

8. Police Department: Approval of a Memorandum of Agreement between CPD and Berkeley County School District regarding SRO's for the 2020-21 school year. Total agreed amount to be funded by BCSO for the FY20-FY21 school year is $37,699, with an additional $11,500 for summer school, if applicable.

9. Police Department: Approval of a Memorandum of Agreement between CPD and Charleston County School District regarding SRO's for the 2020-2021 school year. Total agreed amount to be funded by CCSD for the FY20-FY21 school year is $692,583.18, which includes (2) SRO positions being funded by state allocation.

10. Police Department: Approval of a Memorandum of Agreement between CPD and James Island Charter High School regarding SRO's for the 2020-2021 school year. Total agreed amount to be funded by JICH for the FY20-FY21 school year is $37,699.

11. Police Department: Approval to accept an award of $3,000 from the Ernest Kennedy Center for field intelligence training and alcohol enforcement. There is no match required for this grant.

12. Police Department: Approval to submit a request for sponsorship to the Motorola Solution Foundation for the Lighthouse Health and Wellness custom mobile app through the National Center for Prevention of Community Violence. There is no match required for this sponsorship. This sponsorship request Is due September 1st. This is an after-the-fact approval request.

13. Stormwater Management: Approval to accept the National Fish and Wildlife Foundation (NFWF) Grant for Johns Island Restoration Plan to improve flood resiliency. The grant will develop a plan to reduce barriers to coastal resilience by producing a preliminary floodplain restoration planning framework that will integrate ecological function to increase the overall resilience of Johns Island's communities, fish and wildlife. Federal Funds - $117,500, Local Match - $117,500. Matchkind funds of $117,500 are budgeted in the Drainage Fund.

14. Stormwater Management: Approval of Huger-King Street Drainage Improvements Fee Amendment #1 with Johnson, Mirmiran & Thompson, Inc., in the amount of $582,970.47 for enhanced environmental construction services, pump station and force main design and general consulting services. Approval of Fee Amendment #1 will increase the Professional Services Contract by $582,970.47 (from $405,061.21 to $988,031.68). Funding for this project is from the Cooper River Bridge TIF ($1,000,000), South Carolina Rural Infrastructure Authority Grant ($499,292) and Stormwater Operations ($3,000).

15. Stormwater Management: Approval of Windermere Neighborhood Drainage Improvement Project – Phase 1 Professional Services Contract with Thomas & Hutton Engineering Co. in the amount of $119,600 for the conceptual design phase of the project which will include a study, conceptual design of phase 1 (conceptual layout and opinion of probably cost), and project management and coordination. This Professional Services Contract will obligate $119,600 of the project budget. Funding for this project is coming from the Drainage Fund.

16. Parks-Capital Projects: Approval of International African American Museum Construction Management Fee Amendment #1 to the Construction Management Contract with Cumming Construction Management, Inc., in the amount of $296,492 for an extension of program management services to June 30, 2021, cost management/estimating services for the Lobby revisions and budget analysis and reconciliation services by CS&L. Approval of Fee Amendment will increase the Construction Management Contract by $296,492 (from $767,689 to $1,064,181). Funding sources for this project are: Accommodations Tax ($13,200,000), Charleston County Accommodations Tax ($12,500,00), State Funding ($14,000,000), IAAM Contributions ($53,000,000).

17. Parks-Capital Projects: Approval of International African American Museum GMP Change Order #4 with Turner Construction Company in the amount of $435,549 for costs to initiate the utility rough-ins for the lobby and kitchen design changes requested by the IAAM ($32,056) and costs to complete all lobby and kitchen modifications requested by the IAAM which includes plumbing revisions for the restroom reconfiguration, changes to the kitchen/dining area, utilities for food service additions and other general design adjustments to the design on the second/third level ($403,493). Approval of Change Order #4 will increase the Guarantee Maximum Price (GMP) Contract by $435,549 (from $58,457,323 to $58,892,872). This change order is fully funded by the IAAM. Funding sources for this project are: Accommodations Tax ($13,200,000), Charleston County Accommodations Tax ($12,500,000), State Funding ($14,000,000), IAAM Contributions ($53,000,000).

18. Parks-Capital Projects/Stormwater Management: Approval of Low Battery Seawall Repairs-Phase I Professional Services Contract with Insight Group in the amount of $42,000 to replace P161282 for vibration monitoring services. Attached is a memo explaining the need for extending the services and going over the $40,000 procurement threshold. Approval of the Professional Services Contract will obligates $42,000 of the $36,108,771.21 project budget. The funding sources for this project are: Hospitality Funds ($15,087,957.53), Municipal Accommodations Tax Funds ($15,548,816), CPW Contribution ($5,071,997.68), and Charleston County Accommodations Tax Fees ($400,000).

19. Parks-Capital Projects: Approval of a Construction Contract with Kompan, Inc. in the amount of $89,125.52 for the purchase and installation of new playground equipment at the St. Julian Devine Community Center. The playground equipment is being purchased through the City's cooperative purchasing membership with Omnia (US Communities). Approval of this Construction Contract will obligate $89,125.52 of the project budget $3,110,000. Funding sources for this project are: 2015 General Fund Reserves ($250,000), 2018 General Fund Reserves ($400,000), Cooper River Bridge TIF ($2,340,000), and Charleston Parks Conservancy Contribution ($210,000).

20. Parks-Capital Projects: Approval for the 2020 Park and Recreation Development (PARD) Grant Acceptance to furnish new playground structure, swing set, and safety surfacing for the Vivian Anderson Moultrie Playground. Requested funding of $32,430.60 with a 20% City Match of $8,107.65. City Match of $8,107.65 from 523000-52435 Maintenance, Playground Equipment.

21. Parks-Capital Projects: Approval of a Professional Services contract with Bennett Preservation Engineering, PC, in the amount of $89,355 for engineering services related to the partial removal and preservation of the St. Julian Devine Community Center Smoke Stacks. Approval of this engineering contract will obligate $89,355 of the project budget $3,110,000. Funding sources for this project are: 2015 General Fund Reserves ($250,000) 2018 General Fund Reserves ($400,000), Cooper River Bridge TIF ($2,250,000), and Charleston Parks Conservancy Contribution ($210,000).

22. Parks-Capital Projects: Approval of a Construction Contract with Demolition Environmental Company, LLC (DECO) in the amount of $485,990 for the partial demolition, removal and preservation of the twin smoke stacks located at the St. Julian Devine Community Center. With the approval of the project budget, Staff is authorized to award and/or amend contracts less than $40,000, to the extent contingency funds exist in the Council Approved Budget. Approval of this Construction Contract will obligate $485,990 of the project budget $3,110,000. Funding sources for this project are: 2015 General Fund Reserves ($250,000), 2018 General Fund Reserves

($400,000), Cooper River Bridge TIF ($2,250,000), and Charleston Parks Conservancy Contribution ($210,000).

23. Traffic and Transportation: Approval of a Financial Participation Agreement in the amount of $292,414.30 between the South Carolina Department of Transportation (SCDOT) and the City of Charleston. In coordination with SCDOT, schedule resurfacing of Brigade/Cypress, introduce a protected bikeway with addition of pedestrian ramps with bulb-outs, curb and gutter, leveling grades, rapid beacon flashers (RFFBs) and pavement markings. Total contribution from the City is $292,414.30 from the Cooper River Bridge TIF.

24. The Committee on Human Resources: (Meeting was held on Thursday, August 20, 2020 at 3:00 p.m.)

a. New Business

(i) Review and Approval of 2021 Healthcare Budget and contract renewals
- BCBS South Carolina – Medical and RX
- Premiums

(The 2021 Healthcare budget in the amount of $23,098,033 was approved by the HR Committee on August 20, 2020. This includes the renewal of the BCBS of South Carolina contract. There is a budget increase for 2021 of $1,668,458 which is an increase of 7.8% from the 2020 healthcare budget. The stop loss agreement has been deferred.)

(ii) Defer - Stop Loss Agreement-request to take straight to Ways and Means
(iii) COVID19 update
(iv) Employee Survey
(v) Report from Women's Commission

b. Old Business

c. Other Business

25. The Committee on Real Estate (Meeting was held on Tuesday, September 8, 2020 at 2:30 p.m., Conference Call: 1-929-205-6099; Access Code: 835 678 884) *(Meeting start times may be delayed due to prior meetings still in progress.)*

a. Request authorization for the Mayor to execute a Sublease Agreement with Charleston County for the lease of the EMS Medic Station located at 21 Courtenay Drive to house City of Charleston firefighters during renovations to City Fire Station #8. The monthly rent amount for the building and parking is $3,595.00. (TMS: 460-14-00-020)

b. Consider the following annexation:

(i) 1569 N. Pinebark Lane (TMS# 353-15-00-033) 0.27 acre, West Ashley (District 7). The property is owned by Elizabeth and Nicholas Curry.

In accordance with the Americans with Disabilities Act, people who need alternative formats, ASL (American Sign Language) Interpretation or other accommodation please contact Janet Schumacher at (843) 577-1389 or email to schumacherj@charleston-sc.gov three business days prior to the meeting.

3a.

COMMITTEE / COUNCIL AGENDA

TO: John J. Tecklenburg, Mayor

FROM: Wes Rafferree DEPT. Information Technology

SUBJECT: NETWORK EQUIPMENT REPLACEMENTS AND UPGRADES

REQUEST: APPROVAL TO PURCHASE NEW CISCO NETWORK EQUIPMENT FOR REPLACEMENTS AND UPGRADES TO EXISTING NETWORK INFRASTRUCTURE.

STATE CONTRACT#: 4400016103

COMMITTEE OF COUNCIL: Ways & Means DATE: September 8, 2020

COORDINATION: This request has been coordinated with: *(attach all recommendations/reviews)*

	Yes	N/A	Signature of Individual Contacted	Attachment
Information Technology	X			X
Procurement	X			X

FUNDING: Was funding previously approved? Yes [X] No [ ] N/A [ ]

If yes, provide the following: Dept./Div.: IT Account #: 161000-52740 161000-58020

Balance in Account $144,086.86 $173,762.28 Amount needed for this item $9,124.44 ✓ $63,228.94 ✓

Does this document need to be recorded at the RMC's Office? Yes [ ] No [X]

NOTES: This purchase provides for new network equipment (Cisco switches and associated components) to replace existing, aged equipment as well as to upgrade existing equipment for expanded and improved performance/bandwidth in support of increased City operational needs.

CFO's Signature: Dep CFO for Amy Wheeler, CFO

FISCAL IMPACT:

Mayor's Signature: John J. Tecklenburg, Mayor

ORIGINATING OFFICE PLEASE NOTE: A FULLY STAFFED/APPROVED (except Mayor's Signature) PACKAGE IS DUE IN THE CLERK OF COUNCIL'S OFFICE NO LATER THAN 10:00AM THE DAY OF THE CLERK'S AGENDA MEETING.

people connecting people

INTERNETWORK ENGINEERING

since 1996

13777 Ballantyne Corp Place Suite 305 | Charlotte, NC 28277

IP Phone: 704.540.5030 | Fax 704.541.5059 | http://www.ineteng.com

August 26, 2020

Customer's Address

City of Charleston
2 George Street, Suite 2800
Charleston, SC 29403
Attn: Ivan Torres
Phone: (843) 724-7183
Fax: (843) 965-4078
torresi@charleston-sc.gov

QUOTATION#QT-000024662-1

Please reference quote number on PO

Please make purchase order

Internetwork Engineering
13777 Ballantyne Corp. Place
Suite 305
Charlotte, NC 28277

If you have any questions concerning this quote please contact

Client Services	Account Manager
Loretta Dabbs	Ryan Jenkins
704-943-5600	704-943-5642
clientservices@ineteng.com	rjenkins@ineteng.com

SUBJECT: City of Charleston - Switches and APs

ITEM #	PART #	DESCRIPTION	QTY.	LIST PRICE	UNIT PRICE	EXTENDED PRICE
C9200L-48P-4X-E						
1	C9200L-48P-4X-E	Catalyst 9200L 48-port PoE+, 4 x 10G, Network Essentials	2	$7,300.46	$4,234.27	$8,468.54
2	CON-SNT-C9200L4X	SNTC-8X5XNBD Catalyst 9200L 48-port PoE+, 4 x 10G, Ne	2	$1,572.00	$1,383.36	$2,766.72
3	C9200L-NW-E-48	C9200L Network Essentials, 48-port license	2	$0.00	$0.00	$0.00
4	PWR-C5-1KWAC/2	1KW AC Config 5 Power Supply - Secondary Power Supply	2	$3,160.50	$1,833.09	$3,666.18
5	CAB-TA-NA	North America AC Type A Power Cable	4	$0.00	$0.00	$0.00
6	C9200-STACK-BLANK	Catalyst 9200 Blank Stack Module	4	$0.00	$0.00	$0.00
7	C9200L-DNA-E-48	C9200L Cisco DNA Essentials, 48-port Term license	2	$0.00	$0.00	$0.00
8	C9200L-DNA-E-48-3Y	C9200L Cisco DNA Essentials, 48-port, 3 Year Term license	2	$1,123.92	$651.87	$1,303.74
9	NETWORK-PNP-LIC	Network Plug-n-Play Connect for zero-touch device deployment	2	$0.00	$0.00	$0.00
					Sub-Total	$16,205.18
C9200L-48P-4G-E						
10	C9200L-48P-4G-E	Catalyst 9200L 48-port PoE+, 4 x 1G, Network Essentials	6	$5,825.32	$3,378.69	$20,272.14
11	CON-SNT-C92004GE	SNTC-8X5XNBD Catalyst 9200L 48-port PoE+, 4 x 1G, Net	6	$1,254.00	$1,103.52	$6,621.12
12	C9200L-NW-E-48	C9200L Network Essentials, 48-port license	6	$0.00	$0.00	$0.00
13	PWR-C5-1KWAC/2	1KW AC Config 5 Power Supply - Secondary Power Supply	6	$3,160.50	$1,833.09	$10,998.54
14	CAB-TA-NA	North America AC Type A Power Cable	12	$0.00	$0.00	$0.00
15	C9200-STACK-BLANK	Catalyst 9200 Blank Stack Module	12	$0.00	$0.00	$0.00
16	C9200L-DNA-E-48	C9200L Cisco DNA Essentials, 48-port Term license	6	$0.00	$0.00	$0.00
17	C9200L-DNA-E-48-3Y	C9200L Cisco DNA Essentials, 48-port, 3 Year Term license	6	$1,123.92	$651.87	$3,911.22
18	NETWORK-PNP-LIC	Network Plug-n-Play Connect for zero-touch device deployment	6	$0.00	$0.00	$0.00
					Sub-Total	$41,803.02
C9120AXI-B						
19	C9120AXI-B	Cisco Catalyst 9120AX Series	8	$1,700.93	$986.54	$7,892.32
20	CON-SNT-C9120BIX	SNTC-8X5XNBD Cisco Catalyst 9120AX Series	8	$68.00	$59.84	$478.72
21	NETWORK-PNP-LIC	Network Plug-n-Play Connect for zero-touch device deployment	8	$0.00	$0.00	$0.00
22	AIR-AP-T-RAIL-R	Ceiling Grid Clip for APs & Cellular Gateways-Recessed	8	$0.00	$0.00	$0.00
23	AIR-AP-BRACKET 1	802.11 AP Low Profile Mounting Bracket (Default)	8	$0.00	$0.00	$0.00
24	SW9120AX-CAPWAP-K9	Capwap software for Catalyst 9120AX	8	$0.00	$0.00	$0.00
25	C9120AX-DNA-OPTOUT	CISCO DNA SUBSCRIPTION OPTOUT for C9120AX	8	$0.00	$0.00	$0.00
					Sub-Total	$8,371.04

State of SC Contract# 4400016103

Please include the contract number referenced above on any order authorization or Purchase Order you submit related to this goods and services shown above.

Note: By request, this quote does not include IE Professional Services.
If you would like assistance in implementing this solution, please contact your IE Account Manager immediately for a services estimate.

Total Investment $88,379.24

Plus Tax and/or Shipping

DELIVERY:	FOB: Shipping Point
TERMS:	NET 30
QUOTATION FIRM FOR:	30 DAYS

The enclosed material and information is proprietary to Internetwork Engineering and is strictly confidential. Any unauthorized use, reproduction or retransmission is forbidden. The preceding restrictions shall not apply to State agencies and governmental units to the extent the enclosed material is required to be disclosed under applicable State public record laws.

3b.

COMMITTEE / COUNCIL AGENDA

TO: John J. Tecklenburg, Mayor

FROM: Wes Ratterree **DEPT.** Information Technology

SUBJECT: RENEWAL OF AUTODESK CAD SOFTWARE LICENSING.

REQUEST: APPROVAL TO RENEW ANNUAL AUTODESK AUTOCAD SOFTWARE LICENSING CITY COMPUTERS. NATIONAL IPA TECH SOLUTIONS CONTRACT #2018011-01

COMMITTEE OF COUNCIL: Ways & Means **DATE:** September 8, 2020

COORDINATION: This request has been coordinated with: *(attach all recommendations/reviews)*

	Yes	N/A	Signature of Individual Contacted	Attachment
Information Technology	X			X
Procurement	X			X

FUNDING: Was funding previously approved? Yes [X] No [ ] N/A [ ]

If yes, provide the following: Dept./Div.: IT Account #: 161000-52206

Balance in Account: $939,427.70 Amount needed for this item: $51,964.66 ✓ cc

Does this document need to be recorded at the RMC's Office? Yes [ ] No [X]

NOTES: This purchase is required to renew licensing and support for all AutoDesk AutoCAD software products used by City staff (Stormwater, Public Service/Engineering) for design and development.

CFO's Signature: Deputy CFO for Amy Whitaker, CFO

FISCAL IMPACT:

Mayor's Signature: John J. Tecklenburg, Mayor

ORIGINATING OFFICE PLEASE NOTE: A FULLY STAFFED/APPROVED (except Mayor's Signature) PACKAGE IS DUE IN THE CLERK OF COUNCIL'S OFFICE NO LATER THAN 10:00AM THE DAY OF THE CLERK'S AGENDA MEETING.

QUOTE CONFIRMATION

CDW•G PEOPLE WHO GET IT

DEAR WES RATTERREE,

Thank you for considering CDW•G for your computing needs. The details of your quote are below. [illegible] to convert your quote to an order.

QUOTE #	QUOTE DATE	QUOTE REFERENCE	CUSTOMER #	GRAND TOTAL
LPLL552	8/19/2020	AUTODESK	1956925	$47,674.00

IMPORTANT - PLEASE READ

Special Instructions: The VSL tab / Drop Ship Screen should look like:
SERIAL: 567-60285716
SERIAL: 567-60285617
SERIAL: NA
CONTRACT: 110002837168 10/30/20
CONTRACT: NA
EMAIL: (Enter person who will be managing licenses)
ADDITIONAL INFO: NA

QUOTE DETAILS

ITEM	QTY	CDW#	UNIT PRICE	EXT. PRICE
AGOV AECCOL IC 1DP:SUZ 1Y GV WW ELD	22	6195396	$2,167.00	$47,674.00
Mfg. Part#: 02HI1-WW2C70-T907				
Electronic distribution - NO MEDIA				
Contract: National IPA Technology Solutions (2018011-01)				

PURCHASER BILLING INFO		
Billing Address: CITY OF CHARLESTON ACCOUNTS PAYABLES PO BOX 853 CHARLESTON, SC 29402-0853 **Phone:** (843) 724-3716 **Payment Terms:** Net 30 Days-Govt State/Local	SUBTOTAL	$47,674.00
	SHIPPING	$0.00
	SALES TAX	$0.00
	GRAND TOTAL	$47,674.00
DELIVER TO	**Please remit payments to:**	
Shipping Address: CITY OF CHARLESTON WES RATTERREE 2 GEORGE STREET SUITE 2800 CHARLESTON, SC 29403 **Shipping Method:** ELECTRONIC DISTRIBUTION	CDW Government 75 Remittance Drive Suite 1515 Chicago, IL 60675-1515	

Need Assistance? CDW•G SALES CONTACT INFORMATION

Joe Barese | (866) 819-6497 | josebar@cdw.com

This quote is subject to CDW's Terms and Conditions of Sales and Service Projects at [illegible]
For more information, contact a CDW account manager

COMMITTEE / COUNCIL AGENDA

4.)

TO: John J. Tecklenburg, Mayor

FROM: Meg Thompson **DEPT.** PP&S/Business & Neighborhood Service

SUBJECT: MOU for EDA Cares Act RLF between City & LDC

REQUEST: Approval of Memorandum of Understanding between City and LDC for management and administration of the EDA CARES Act Revolving Loan Fund and authorization for Mayor to sign any additional documentation required by EDA for implementation of the Revolving Loan Fund

COMMITTEE OF COUNCIL: Ways & Means **DATE:** 9/8/2020

COORDINATION: This request has been coordinated with: *(attach all recommendations/reviews)*

	Yes	N/A	Signature of Individual Contacted	Attachment
Corporate Counsel	X			
Cap. Proj. Cmte. Chair		X		
PP&S Operations Mgr	X			

FUNDING: Was funding previously approved? Yes ☐ No ☐ N/A ☐

If yes, provide the following: Dept./Div.: _____ Account #: _____

Balance in Account _____ Amount needed for this item _____

Does this document need to be recorded at the RMC's Office? Yes ☐ No ☐

NEED: Identify any critical time constraint(s).

CFO's Signature: _____

FISCAL IMPACT:

Mayor's Signature: _____
John J. Tecklenburg, Mayor

ORIGINATING OFFICE PLEASE NOTE: A FULLY STAFFED/APPROVED (except Mayor's Signature) PACKAGE IS DUE IN THE CLERK OF COUNCIL'S OFFICE NO LATER THAN 10:00AM THE DAY OF THE CLERK'S AGENDA MEETING.

COMMITTEE / COUNCIL AGENDA

5.)

TO: John J. Tecklenburg, Mayor

FROM: Amy K. Wharton **DEPT.** BFRC

SUBJECT: CITY REVIEWING CONSULTANT AND PROJECT MANAGER FOR THE MAGNOLIA PUD

REQUEST: Approval of the second amendment to the contract with JLA to act as the City's representative during the design and construction of the Magnolia PUD. The scope of the services is to act as an approved reviewing consultant for the City of Charleston. As the reviewing consultant, JLA will assist with the review of construction documents, shop drawings and pay requests. They will also assist with the observation of construction to verify that it is satisfactory with project requirements. JLA will also attend construction site meetings. All final approvals will be made by the City. Previous amendment to this contract ended May 2020.

COMMITTEE OF COUNCIL: W&M **DATE:** August 18, 2020

COORDINATION: This request has been coordinated with: *(attach all recommendations/reviews)*

	Yes	N/A	Signature of Individual Contacted	Attachment
Corporate Counsel	X			
Cap. Proj. Cmte. Chair				
Chief Financial Officer	X		Amy Wharton	

FUNDING: Was funding previously approved? Yes ☐ No ☐ N/A ☐

If yes, provide the following: Dept./Div.: _____ Account #: _____

Balance in Account * Amount needed for this item $100,000.00

Does this document need to be recorded at the RMC's Office? Yes ☐ No X

NEED: Identify any critical time constraint(s).

CFO's Signature: Amy Wharton

FISCAL IMPACT: **** Fees will be paid from the Charleston Neck TIF.***

Mayor's Signature: _____
John J. Tecklenburg, Mayor

ORIGINATING OFFICE PLEASE NOTE: A FULLY STAFFED/APPROVED (except Mayor's Signature) PACKAGE IS DUE IN THE CLERK OF COUNCIL'S OFFICE NO LATER THAN 10:00AM THE DAY OF THE CLERK'S AGENDA MEETING.

ARCHITECTS ◆ ENGINEERS ◆ LANDSCAPE ARCHITECTS

FEE PROPOSAL

DATE: August 21, 2020

PROPOSAL #: 3613.1801.2

SENT BY: ☐ PHONE ☐ FAX ☒ EMAIL whartona@charleston-sc.gov

TO: Ms Amy Wharton
Director, Department of Budget,
Finance & Revenue

RE: City Approved Reviewing Consultant and Project Manager For Magnolia PUD Amendment No. 2

BY: Laura S Cabiness, P.E.

SCOPE OF SERVICES:

Johnson, Laschober & Associates (JLA) is pleased to offer a proposal for extension to our contract acting as the City's representative during the design and construction of the above referenced work The scope of our services is to act as an Approved Reviewing Consultant and City Project Manager for the City of Charleston as such requirements and responsibilities are defined in the Public Infrastructure Improvements Agreement dated September 1, 2015 JLA will assist with review of construction documents, shop drawings, interim pay requests, and will assist with the observation of the construction to verify that it is satisfactory with project requirements. It is noted, however, that all final approvals will be made by the City. In addition, JLA will attend periodic construction site meetings to observe and monitor the progress of the design and construction. JLA will provide documentation of the site visits with corresponding photographs and construction updates.

This work will be b lled on an hourly basis with a not to exceed fee of $100 000 up to a one-year period. Phase 2 of Magnolia is in the process of being terminated for convenience and the remainder of the project will be rebid in the fall of 2020. Phase 3 Former Koppers Remediation was initially awarded to Gulf Stream Construction. The work was paused for convenience and the Developer intends to resume work this fall. The Phase 3 work is required to be completed in order to have the site removed from EPA's National Priorities List There is also an ongoing project with Wood Environmental and ReCon for insitu stabilization of the old impoundment area. Additional projects are anticipated as described in the Public Infrastructure Improvements Agreement. This fee anticipates and average of 12 5 hours per week However monthly invoices will be provided with appropriate documentation of the monthly services provided as they may vary from time to time based on the actual work taking place on the project

Please sign in the space provided as the City's acceptance of this proposal and our notice to proceed

Thank you for the opportunity to submit this proposal We look forward to working with you on this project.

Sincerely

JOHNSON, LASCHOBER & ASSOCIATES, P.C

Laura S. Cabiness, P E.

Terms and Conditions

Architect/Engineer of Record (AER) shall perform the services outlined in this agreement for the stated fee agreement.

Access to Site -- Unless otherwise stated, the AER will have access to the site for activities necessary for the performance of the services. The AER will take precautions to minimize damage due to these activities, but has not included in the fee the cost of restoration of any resulting damage

Fee --The total fee, except stated lump sum, shall be understood to be an estimate, based upon Scope of Services and shall not be exceeded by more than ten percent, without written approval of the Client. Where the fee arrangement is to be on an hourly basis, the rates shall be those that prevail at the time services are rendered.

Billings/Payments -- Invoices will be submitted monthly for services and reimbursable expenses and are due when rendered Invoices shall be considered PAST DUE if not paid within 30 days after the invoice date and the AER may, without waiving any claim or right against Client and without liability whatsoever to the Client, terminate the performance of the service Retainers shall be credited on the final invoice. A service charge will be charged at 1.5% (or the legal rate) per month on the unpaid balance. In the event any portion of an account remains unpaid 90 days after billing the Client shall pay cost of collection, including reasonable attorneys' fees.

Insurance - During the term of the Contract, the City of Charleston shall keep in force at its expense, public liability insurance (provided by the South Carolina Insurance Reserve Fund or other insurance provider chosen by the City) with a limit not to exceed the amounts listed below for damages as the result of any one occurrence including damages for care and loss of services, because of personal injury sustained by one or more persons, because of all property damage sustained by one or more persons or organizations, or by any combination of personal injury or property damage sustained by one or more persons or organizations:

a) A limit of Three Hundred Thousand and No/100 ($300,000 00) Dollars per person arising because of loss from a single occurrence on account of bodily injuries, because of property damage sustained, or by any combination of personal injury or property damage; and
b) A total sum not to exceed Six Hundred Thousand ($600,000.00) Dollars as the result of any one occurrence accident or disaster.

A copy of the City's certificate of insurance will be provided upon request

Hidden Conditions -- A hidden condition is hidden if concealed by existing finishes or if it cannot be investigated by reasonable visual observation. If the AER has reason to believe that such a condition may exist the AER shall notify the client who shall authorize and pay for all costs associated with the investigation of such a condition and, if necessary, all costs necessary to correct said condition. If (1) the client fails to authorize such investigation or correction after due notification, or (2) the AER has no reason to believe that such a condition exists, the client is responsible for all risks associated with this condition, and the ER shall not be responsible for the existing condition nor any resulting damages to persons or property.

Risk Allocation -- In recognition of the relative risks, rewards and benefits of the project to both the Client and the AER the risks have been allocated so that the Client agrees that, to the fullest extent permitted by law, the AER's total liability to the Client, for any and all injuries, claims, losses, expenses, damages or claim expenses arising out of this agreement, from any cause or causes, shall not exceed the total amount of the AER's fee or other amount agreed upon when added under Special Conditions Such causes, include but are not limited to the AER's negligence, errors, omissions, strict liability, breach of contract or breach of warranty

Jobsite Safety -- Neither the professional activates of the Consultant, nor the presence of the Consultant or its employees and subconsultants at a construction/project site, shall relieve the General Contractor of its obligations, duties, and responsibilities including but not limited to, construction means, methods sequence, techniques or procedures necessary for performing, superintending and coordinating the Work in accordance with the contract documents and any health or safety precautions required by any regulatory agencies. The Consultant and its personnel have no authority to exercise any control over any construction contractor or its employees in connection with their work or any health or safety programs or procedures. The Client agrees that the General Contractor shall be solely responsible for jobsite safety, and warrants that this intent shall be carried out in the Client's contract with the General Contractor. The Client also agrees that the Client, the Consultant and the Consultant's subconsultants shall be indemnified by the General Contractor and shall be made additional insureds under the General Contractor's policies of general liability insurance

Termination of Services -- This agreement may be terminated upon 10 days written notice by either party should the other fail to perform his obligations hereunder. In the event of termination, the Client shall pay the AER for all services, rendered to the date of termination and all reimbursable expenses.

Ownership Documents -- All documents produced by the AER under this agreement shall remain the property of the AER and may not be used by this Client for any other endeavor without the written consent of the AER.

Applicable Law -- Unless otherwise specified, this agreement shall be governed by the laws of the State of South Carolina.

Offered by (AER):

_____
(signature)

Laura S. Cabiness, P.E.
(printed name/title)

Accepted by (Client):

_____
(signature) (date)

_____
(printed name/title)

Billing Address: _____

6.)

SECOND SUPPLEMENTAL ORDINANCE

A SUPPLEMENTAL ORDINANCE PROVIDING FOR THE ISSUANCE AND SALE OF ONE OR MORE SERIES OF CITY OF CHARLESTON, SOUTH CAROLINA, STORMWATER SYSTEM REFUNDING REVENUE BONDS; AND OTHER MATTERS RELATING THERETO.

WHEREAS, on May 22, 2012, the Charleston City Council (the "Council"), the governing body of the City of Charleston, South Carolina (the "City"), adopted a General Bond Ordinance providing for the issuance of Stormwater System Revenue Bonds (the "General Bond Ordinance"); and

WHEREAS, on May 22, 2012 the Council adopted a First Supplemental Bond Ordinance providing for the issuance of $46,725,000 Stormwater System Revenue Bonds, Series 2012 dated June 19, 2012 (the "Series 2012 Bonds"), to defray the cost of a portion of the costs of the construction, repair and renovation of the stormwater management system of the City, and for other purposes related thereto; and

WHEREAS, the City has been advised that based on the current interest rate environment and expectations in the near term, it may be possible to refund some portion or all of the Series 2012 Bonds maturing on January 1 in the years 2023 through 2033, inclusive, in the aggregate principal amount of $30,830,000 (the "Refunded Bonds") and produce debt service savings for the City.

NOW, THEREFORE, BE IT ORDAINED by the Council as follows:

Section 1. **Definitions**. The terms defined in this Section 1 and all words and terms defined in the General Bond Ordinance (the General Bond Ordinance, as from time to time amended or supplemented by Supplemental Ordinances, being defined as the "Ordinance") (except as herein otherwise expressly provided or unless the context otherwise requires), shall for all purposes of this Supplemental Ordinance have the respective meanings given to them in the Ordinance and in this Section 1.

"*Business Day*" shall mean any day other than a Saturday, Sunday, legal holiday or bank holiday in the State of South Carolina or the state where the principal office of the Trustee or Custodian is located or any day on which the payment system of the United States Federal Reserve is not operational.

"*2020 Debt Service Reserve Fund Account*" shall mean the account, if any, established in the Debt Service Reserve Fund and maintained in the amount of the 2020 Debt Service Reserve Fund

Requirement to provide funds to ensure the timely payment of the Principal and Interest Requirements with respect to the Series 2020 Bonds (as defined herein).

"*2020 Debt Service Reserve Fund Requirement*" shall mean an amount equal to the least of (i) 10% of the original proceeds of the Series 2020 Bonds, (ii) maximum annual Principal and Interest Requirements on the Series 2020 Bonds then outstanding for any Fiscal Year, or (iii) 125% of the average annual Principal and Interest Requirements of the Series 2020 Bonds then outstanding.

"*Trustee*" shall mean U.S. Bank National Association.

Section 2. Authorization of Series 2020 Bonds, Maturities, Interest Rates, and Mandatory Redemption Provisions.

(a) There is hereby authorized to be issued one or more Series of Bonds designated "Stormwater System Refunding Revenue Bonds, Series 2020" (the "Series 2020 Bonds") in the total principal amount of not exceeding $34,000,000 for the purpose of (A) refunding the Refunded Bonds, (B) paying the Costs of Issuance of the Series 2020 Bonds, and (C) funding the 2020 Debt Service Reserve Fund Account if so determined by the Mayor. Pursuant to Section 2.04 of the General Obligation Ordinance, the City may issue refunding Bonds for the purpose of refunding Bonds without satisfying the conditions for the issuance of Bonds as contained in Section 2.03(c) of the General Bond Ordinance to the extent that the aggregate Principal and Interest Requirements with respect to the refunding Bonds is less than the aggregate Principal and Interest Requirements with respect to the Bonds to be refunded.

(b) The Series 2020 Bonds shall be issued as fully-registered Bonds in the denominations of $5,000 and integral multiples of $5,000 or in the denominations of $1,000 and integral multiples of $1,000. The Mayor of the City is hereby authorized and empowered to determine the dated date of the Series 2020 Bonds, the aggregate principal amount of the Series 2020 Bonds, the interest payment dates of the Series 2020 Bonds, the maturity dates of the Series 2020 Bonds, the principal amount of each maturity of the Series 2020 Bonds (including the portions thereof to be issued on a taxable or tax-exempt basis), the interest rates for the Series 2020 Bonds, the Series 2020 Bonds to be subject to mandatory and optional redemption and the redemption prices and the terms thereof, the Refunded Bonds to be refunded, the tax-exempt or taxable status of the Series 2020 Bonds and all terms and conditions of the Series 2020 Bonds required to be set forth in this Supplemental Ordinance by the General Bond Ordinance. The Mayor is further authorized to assign a different name or series designation to the Series 2020 Bonds if he determines it is in the best interests of the City to do so. The foregoing terms and conditions shall be set forth in a certificate of the Mayor and included with this Supplemental Ordinance in the records of City Council.

(c) The Mayor, upon advice of the City's municipal advisor, is hereby authorized and directed (i) to determine whether the Series 2020 Bonds shall be sold through a private sale to Wells Fargo Securities, BofA Securities and Rice Financial Products Company, as underwriters; (ii) to distribute, if required, a Preliminary Official Statement; (iii) to distribute, if required, a request for proposals to financial institutions; (iv) to determine the final principal amount, Bond Payment Dates, principal payment amounts, principal payment dates, interest rates, final maturity date and redemption provisions of the Series 2020 Bonds; and (v) whether to award the Series 2020 Bonds to the bidder or bidders offering to purchase them at the most advantageous terms to the City or to the underwriters or to select one or more financial institutions to purchase the Series 2020 Bonds, provided that the aggregate principal amount of the Series 2020 Bonds does not exceed $34,000,000 and the final maturity does not extend beyond the original final maturity date of the Series 2012 Bonds, without further action required of the Council. The Mayor, upon advice of the City's bond counsel and municipal advisor, is hereby authorized to determine whether the Series 2020 Bonds shall

be issued as taxable or tax-exempt bonds or in such other structure as shall be approved by the Mayor. If the Series 2020 Bonds are issued as taxable bonds, the Mayor, upon the advice of the City's municipal advisor and bond counsel, is authorized to cause the issuance by the City of an additional series of tax exempt stormwater system revenue bonds in 2021 or 2022 (the "Tax Exempt Refunding Bonds") to effect the refunding of the Series 2020 Bonds; provided that the maximum principal amount of the Tax Exempt Refunding Bonds cannot exceed the outstanding principal amount of the Series 2020 Bonds and the final maturity date of the Tax Exempt Refunding Bonds cannot extend beyond the final maturity date of the Series 2020 Bonds. Although the maximum aggregate principal amount of the Series 2020 Bonds authorized by this Supplemental Ordinance may not exceed $34,000,000, the Tax Exempt Refunding Bonds issued to cause the refunding of the Series 2020 Bonds are authorized, subject to the limitations of this paragraph, to be issued by the City irrespective of the original principal amount of the Series 2020 Bonds and the $34,000,000 aggregate limit for the Series 2020 Bonds. Notwithstanding anything herein to the contrary, the maximum principal amount of the Tax Exempt Refunding Bonds to be issued by the City cannot exceed the principal amount of the Series 2020 Bonds outstanding on the date of the issuance of the Tax Exempt Refunding Bonds. The Mayor is hereby authorized and directed to determine the terms and conditions of the Tax Exempt Refunding Bonds to the same extent and subject to the same limitations as he is authorized and directed to do for the Series 2020 Bonds pursuant this Section 2.

(d) Principal of and premium, if any, on the Series 2020 Bonds when due, shall be payable at the corporate trust office of the Trustee. Interest on the Series 2020 Bonds shall be payable from the Interest Payment Date next preceding the date of authentication thereof to which interest has been paid, unless the date of authentication is an Interest Payment Date, in which case interest shall be payable from that date; provided, however, that interest shall be payable from the dated date of the Series 2020 Bonds. Interest on the Series 2020 Bonds (calculated on the basis of a 360-day year of twelve 30-day months) shall be payable on each Interest Payment Date, in each case to the Holders as of the immediately preceding Record Date, interest to be paid by the Trustee by check or draft mailed to each Holder at his address as it appears on the Books of Registry maintained at the corporate trust office of the Trustee; provided that payment to a Holder of $1,000,000 or more may be made by wire transfer to an account within the continental United States in accordance with written instructions filed with the Trustee no later than the Record Date.

(e) The Series 2020 Bonds shall be in substantially the form attached hereto as Exhibit A, with any necessary or appropriate variations, omissions, and insertions as are incidental to the series, numbers, denominations, maturities, interest rate or rates, redemption provisions, the purpose of issuance, and other details thereof or as are otherwise permitted or required by law or by the Ordinance, including this Supplemental Ordinance.

Section 3. Optional and Mandatory Redemption of Series 2020 Bonds.

(a) The Series 2020 Bonds shall be subject to redemption upon the terms determined by the Mayor.

(b) A portion of the Series 2020 Bonds (the "Term Bonds") may be subject to mandatory sinking fund redemption as determined by the Mayor. Such Term Bonds shall be payable from amounts accumulated in the Bond Redemption Account in the Debt Service Fund.

At its option, to be exercised on or before the 60 day next preceding any mandatory redemption date, the City may (i) deliver to the Trustee for cancellation Series 2020 Bonds of a maturity subject to mandatory redemption in part on such redemption date, in any aggregate principal amount desired, or (ii) receive a credit in respect of its mandatory redemption obligation for any Series 2020 Bonds of a maturity subject to mandatory redemption in part on such redemption date, which, prior to such date, have

been purchased or redeemed (otherwise than through the operation of the mandatory redemption requirement) by the City and cancelled by the Trustee and not theretofore applied as a credit against any mandatory redemption obligation. Each such Series 2020 Bond so delivered or previously purchased or redeemed shall be credited by the Trustee at 100% of the principal amount thereof on the obligation of the City on such respective mandatory redemption obligations in chronological order, and the principal amount of such Series 2020 Bonds to be redeemed by operation of the mandatory redemption requirement shall be accordingly reduced.

Section 4. Book-Entry System; Recording and Transfer of Ownership of Series 2020 Bonds. If the Series 2020 Bonds are sold pursuant to a preliminary official statement, unless and until the book-entry-only system described in this Section 4 has been discontinued, the Series 2020 Bonds will be available only in book-entry form in principal amounts of $5,000 or any integral multiple thereof. The Depository Trust Company, New York, New York ("DTC"), will act as securities depository for the Series 2020 Bonds, and the ownership of one fully registered Series 2020 Bond for each maturity, each in the aggregate principal amount of such maturity, will be registered in the name of Cede & Co., as nominee for DTC. Purchases of Series 2020 Bonds under the book-entry system may be made only through brokers and dealers who are, or act through, DTC Participants in accordance with rules specified by DTC. Each DTC Participant will receive a credit balance in the records of DTC in the amount of such DTC Participant's ownership interest in the Series 2020 Bonds. The ownership interest of each actual purchaser of a Series 2020 Bond (the "Beneficial Owner") will be recorded through the records of the DTC Participant or persons acting through DTC Participants (the "Indirect Participants"). Transfers of ownership interests in the Series 2020 Bonds will be accomplished only by book entries made by DTC and, in turn, by DTC Participants or Indirect Participants who act on behalf of the Beneficial Owners. Beneficial Owners of the Series 2020 Bonds will not receive nor have the right to receive physical delivery of Series 2020 Bonds, and will not be or be considered to be holders thereof under the Ordinance, except as specifically provided in the event the book-entry system is discontinued.

So long as Cede & Co., as nominee of DTC, is the registered owner of the Series 2020 Bonds, references in this Supplemental Ordinance to the Bondholders or registered owners of the Series 2020 Bonds shall mean Cede & Co. and shall not mean the Beneficial Owners. The City, the Trustee, the Registrar and the Paying Agent may treat DTC (or its nominee) as the sole and exclusive owner of the Series 2020 Bonds registered in its name for the purpose of payment of the principal of or interest or premium, if any, on the Series 2020 Bonds, giving any notice permitted or required to be given to Bondholders under the Ordinance, registering the transfer of Series 2020 Bonds, obtaining any consent or other action to be taken by Bondholders and for all other purposes whatsoever, and shall not be affected by any notice to the contrary. The City, the Trustee, the Registrar and the Paying Agent shall not have any responsibility or obligation to any DTC Participant, any person claiming a beneficial ownership interest in the Series 2020 Bonds under or through DTC or any DTC Participant, or any other person which is not shown on the registration books kept by the Registrar as being a Bondholder, with respect to the accuracy of any records maintained by DTC or any DTC Participant; the payment by DTC or any DTC Participant of any amount in respect of the principal of or interest or premium, if any, on the Series 2020 Bonds; any notice which is permitted or required to be given to Bondholders thereunder or under the conditions to transfers or exchanges adopted by the City or the Trustee; or any consent given or other action taken by DTC as a Bondholder.

Principal, premium, if any, and interest payments on the Series 2020 Bonds will be made to DTC or its nominee, Cede & Co., as registered owner of the Series 2020 Bonds. Payments by DTC Participants and Indirect Participants to Beneficial Owners of the Series 2020 Bonds will be the responsibility of such DTC Participant or Indirect Participant and not of DTC, the Trustee, the Registrar, the Paying Agent or the City.

While the book-entry system is used for the Series 2020 Bonds, the Trustee will give any notice of redemption or any other notice required to be given to holders of the Series 2020 Bonds only to DTC. Any failure of DTC to advise any DTC Participant, or of any DTC Participant to notify any Indirect Participant, or of any DTC Participant or Indirect Participant to notify any Beneficial Owner, of any such notice and its content and effect will not affect the validity of the redemption of the Series 2020 Bonds called for redemption or of any other action premised on such notice. Conveyance of notices and other communications by DTC to DTC Participants, by DTC Participants to Indirect Participants and in turn by DTC Participants and Indirect Participants to Beneficial Owners of the Series 2020 Bonds will be governed by arrangements among them.

Neither the City, the Trustee, the Registrar nor the Paying Agent will have any responsibility or obligation to such DTC Participants, or the persons for whom they act as nominees, with respect to payments actually made to DTC or its nominee, Cede & Co., as registered owner of the Series 2020 Bonds in book-entry form, or with respect to the providing of notice for the DTC Participants, the Indirect Participants, or the Beneficial Owners of the Series 2020 Bonds in book-entry form.

For every transfer and exchange of a beneficial ownership interest in the Series 2020 Bonds, a Beneficial Owner may be charged a sum sufficient to cover any tax, fee or other governmental charge that may be imposed in relation thereto.

DTC may determine to discontinue providing its service with respect to the Series 2020 Bonds at any time by giving notice to the City and discharging its responsibilities with respect thereto under applicable law. In addition, if the City determines that continuation of the system of book-entry-only transfers through DTC (or a successor securities depository) is not in the best interests of the Beneficial Owners of the Series 2020 Bonds or the City, the City may thereupon terminate the services of DTC with respect to the Series 2020 Bonds. Further, the City shall terminate the services of DTC with respect to the Series 2020 Bonds upon receipt by the City and the Trustee of written notice from DTC Participants having interests, as shown in the records of DTC, in an aggregate principal amount of not less than fifty percent (50%) of the aggregate principal amount of the then outstanding Series 2020 Bonds, to the effect that: (i) DTC is unable to discharge its responsibilities with respect to the Series 2020 Bonds; or (ii) a continuation of the system of book-entry-only transfers of the Series 2020 Bonds is not in the best interest of the Beneficial Owners of the Series 2020 Bonds. If for any such reason the system of book-entry-only transfers through DTC is discontinued, Series 2020 Bond certificates will be delivered as described in the Ordinance in fully registered form in denominations of $5,000 or any integral multiple thereof in the names of Beneficial Owners or DTC Participants; provided, however, that in the case of any such discontinuance (other than as described in clause (ii) of the preceding sentence) the City may within 90 days thereafter appoint a substitute securities depository which, in the City's opinion, is willing and able to undertake the functions of DTC upon reasonable and customary terms.

In the event the book-entry system is discontinued, the persons to whom Series 2020 Bond certificates are delivered will be treated as "Bondholders" for all purposes of the Ordinance, including the giving to the City or the Trustee of any notice, consent, request or demand pursuant to the Ordinance for any purpose whatsoever. In such event, the Series 2020 Bonds will be transferable to such Bondholders, interest on the Series 2020 Bonds will be payable by check or draft of the Trustee, as Paying Agent, mailed to such Bondholders, and the principal and redemption price of all Series 2020 Bonds will be payable at the principal corporate trust office of the Paying Agent.

Section 5. 2020 Debt Service Reserve Fund Account; 2020 Debt Service Reserve Fund Requirement.

The Mayor is hereby authorized and empowered to determine whether there shall be a 2020 Debt Service Reserve Fund Requirement. If it is determined that there will be a 2020 Debt Service Reserve Fund Requirement the following provisions shall apply.

(a) The 2020 Debt Service Reserve Fund Account shall be funded initially with proceeds of the Series 2020 Bonds for Debt Service Reserve Fund Requirement. The Debt Service Reserve Fund Account is intended to ensure the timely payment of the principal of and interest on the Series 2020 Bonds and may provide for the redemption or prepayment of the Series 2020 Bonds prior to their stated maturities.

(b) Moneys in the 2020 Debt Service Reserve Fund Account shall be used for the following purposes, and for no other:

(i) To prevent a default in the payment of the principal of or interest on the Series 2020 Bonds, by reasons of the fact that moneys in the Debt Service Fund are insufficient for such purposes;

(ii) To pay the principal of, interest on, and redemption premium, if any, of the Series 2020 Bonds in the event that all outstanding Series 2020 Bonds are to be redeemed or prepaid as a whole;

(iii) To effect the retirement of the Series 2020 Bonds through purchase under the conditions herein described.

No further funding of the 2020 Debt Service Reserve Fund Account is necessary so long as the amounts held therein are not less than the 2020 Debt Service Reserve Fund Requirement.

(c) Whenever the market value of the cash and securities in the 2020 Debt Service Reserve Fund Account shall exceed the 2020 Debt Service Reserve Fund Requirement, such excess may be used at the written direction of the City either (i) to repurchase or retire the Series 2020 Bonds at prices not exceeding the call price first to become available or then prevailing, or (ii) to transfer to the Debt Service Fund to be applied to the payment of the debt service for the Bonds.

(d) Other than as provided in paragraph (c) of this Section, withdrawals from the 2020 Debt Service Reserve Fund Account shall be made only to make available to the Trustee the moneys which it requires to effect payment of principal and interest and premium, if any, on the Series 2020 Bonds in accordance with this Section. Such withdrawal shall be made not less than one (1) day and no more than five days prior to occasion when installments of principal and interest and premium, if any, become due.

(e) In the event moneys are required to be withdrawn from the 2020 Debt Service Reserve Fund Account to pay debt service on the Series 2020 Bonds, or the value of investments therein as determined annually shall be less than the 2020 Debt Service Reserve Fund Requirement, the City will make additional payments from the Revenues to restore the amounts withdrawn, in the case of a withdrawal, within one year from the date of withdrawal, and immediately in case of a valuation.

(f) So long as the amount on deposit in the 2020 Debt Service Reserve Fund Account is not less than the 2020 Debt Service Reserve Fund Requirement, if any, all investment earnings on amounts held in the 2020 Debt Service Reserve Fund Account shall be transferred to the Debt Service Fund and

applied to pay Debt Service on the Bonds, or the City may enter into an investment agreement with respect to the 2020 Debt Service Reserve Fund Account and the proceeds thereof be used for any lawful purpose of the System which will not jeopardize the tax-exemption of interest on the Series 2020 Bonds as authorized by an Opinion of Bond Counsel. Once the amount in the 2020 Debt Service Reserve Fund Account equals or exceeds Debt Service on all Bonds then Outstanding until their final maturity, the City may instruct the Trustee, or the custodian of such Fund, to make disbursements from the 2020 Debt Service Reserve Fund Account for the payment of Debt Service on the Series 2020 Bonds in lieu of the payments to be made from the Debt Service Fund.

(g) At such time as no Series 2020 Bonds are Outstanding, any funds remaining in the 2020 Debt Service Reserve Fund Account may be disbursed to the City.

Section 6. Escrow Fund.

(a) There is hereby created and established the Escrow Fund. The Escrow Holder of the Escrow Fund shall be the Trustee or such other such bank as designated by the Mayor or the Chief Financial Officer. The Chief Financial Officer is hereby authorized and directed for and on behalf of the City to execute such agreements, including an escrow deposit agreement, and give such directions as shall be necessary to carry out the provisions hereof. The Trustee is hereby directed to call the Refunded Bonds for redemption on such date as may be selected by the Chief Financial Officer, and to pay the principal of and interest on the Refunded Bonds upon the redemption thereof, from the moneys and obligations deposited therewith.

Section 7. Certain Findings and Determinations. The City finds and determines:

(a) This Supplemental Ordinance supplements the Ordinance, constitutes and is a "Supplemental Ordinance" within the meaning of the quoted term as defined and used in the Bond Ordinance, and is adopted under and pursuant to the Ordinance.

(b) The Series 2020 Bonds constitute and are "Bonds" within the meaning of the quoted word as defined and used in the Ordinance.

(c) The Revenues pledged under the Ordinance are not encumbered by any lien or charge thereon or pledge thereof.

(d) There does not exist an Event of Default, nor does there exist any condition which, after the passage of time or the giving of notice, or both, would constitute an Event of Default under the Ordinance.

(e) The period of usefulness of the System is in excess of 40 years.

Section 8. Continuing Disclosure.

(a) Pursuant to Section 11-1-85 of the Code of Laws of South Carolina 1976, as amended, the City has covenanted to file with a central repository for availability in the secondary bond market, when requested, an annual independent audit, within 30 days of its receipt of the audit; and event specific information within 30 days of an event adversely affecting more than five (5%) percent of its revenue or tax base. The only remedy for failure by the City to comply with the covenant in this Section 9(a) shall be an action for specific performance of this covenant. The City specifically reserves the right to amend this covenant to reflect any change in Section 11-1-85, without the consent of any Bondholder.

(b) In addition, if the City is required to enter into a continuing disclosure agreement in connection with the Series 2020 Bonds, the City hereby covenants and agrees that it will comply with and carry out all of the provisions of such continuing disclosure agreement. Notwithstanding any other provision of this Supplemental Ordinance, failure of the City to comply with the a continuing disclosure agreement shall not be considered an Event of Default under the Ordinance; however, any Bondholder may take such actions as may be necessary and appropriate, including seeking mandate or specific performance by court order, to cause the City to comply with its obligations under this paragraph.

Section 9. Award of Series 2020 Bonds.

(a) Subject to the requirements of this Supplemental Ordinance, including Section 2 hereof, the Mayor is authorized to sell the Series 2020 Bonds on behalf of the City to the financial institution or to the underwriters, as he determines is in the best interests of the City. If the Series 2020 Bonds are sold to the underwriters pursuant to a purchase contract, the form of the purchase contract is to be approved by the Mayor. The Mayor is authorized to execute such purchase contract, if any, on behalf of the City provided the terms thereof are consistent with the terms of this Supplemental Ordinance.

(b) The Council hereby authorizes a Preliminary Official Statement of the City relating to the Series 2020 Bonds, the form of which is to be approved by the Mayor; the Council hereby authorizes the distribution of a Preliminary Official Statement in connection with the sale of the Series 2020 Bonds, and hereby authorizes the Mayor to deem it final within the meaning of S.E.C. Rule 15(c)(2)-12; the Council further authorizes the preparation and distribution of the final Official Statement following the sale of the Series 2020 Bonds; the Mayor is hereby authorized and directed to execute copies of the Official Statement and deliver them to the purchaser of the Series 2020 Bonds; and the Mayor hereby authorizes the use of the Official Statement and the information contained therein in connection with the public offering and sale of the Series 2020 Bonds by the purchaser thereof. Notwithstanding, Section 9(b) hereof, as provided in Section 2 of this Supplemental Ordinance, the Mayor may determine to sell the Series 2020 Bonds without the use of a Preliminary Official Statement, and in all cases, the sale of the Series 2020 Bonds shall be consistent with the requirements hereof.

(c) A copy of this Supplemental Ordinance shall be filed with the minutes of this meeting.

(d) The Council hereby authorizes and directs all of the officers and employees of the City to carry out or cause to be carried out all obligations of the City under the Ordinance and to perform all other actions as they shall consider necessary or advisable in connection with the issuance, sale, and delivery of the Series 2020 Bonds.

Section 10. State Tax Exemption of Series 2020 Bonds.

(a) The Series 2020 Bonds and the interest thereon shall be exempt from all state, county, municipal, school district, and all other taxes or assessments in the State of South Carolina, direct or indirect, general or special, whether imposed for the purpose of general revenue or otherwise, except inheritance, estate, or transfer taxes.

(b) If the Series 2020 Bonds are issued as tax-exempt bonds or if the Tax Exempt Refunding Bonds are issued, the City shall not take, or permit or suffer to be taken, any action with respect to the gross proceeds of the Series 2020 Bonds or the Tax Exempt Refunding Bonds, respectively, which would cause the Series 2020 Bonds or the Tax Exempt Refunding Revenue Bonds, respectively, to be "arbitrage bonds" within the meaning of Section 148(a) of the Code.

Section 11. **Disposition of Proceeds of Series 2020 Bonds and Certain Other Moneys**. From the proceeds derived from the sale of the Series 2020 Bonds there shall be transferred or deposited with the Trustee for deposit in the Escrow Fund sufficient funds to pay the Refunded Bonds. All remaining proceeds of the Series 2020 Bonds shall be used to pay Costs of Issuance.

Section 12. **Additional Restrictions on Defeasance**. For purposes of Article VIII of the General Bond Ordinance, all moneys used for purposes of a defeasance shall be held in (i) cash (insured at all times by the Federal Deposit Insurance Corporation or otherwise collateralized with obligations described in clause (ii) herein), or (ii) invested in direct obligations of (including obligations issued or held in book-entry form on the books of) the Department of the Treasury of the United States of America.

Section 13. **Interested Parties**. To the extent that the Ordinance confers upon or gives or grants to any right, remedy or claim under or by reason of the Ordinance, is hereby explicitly recognized as being a third-party beneficiary hereunder and may enforce any such right, remedy or claim conferred, given or granted hereunder.

Nothing in the Ordinance expressed or implied is intended or shall be construed to confer upon, or to give or grant to, any person or entity, other than the City, the Trustee, and the Registered Holders of the Series 2020 Bonds, any right, remedy or claim under or by reason of the Ordinance or any covenant, condition or stipulation hereof, and all covenants, stipulations, promises and agreements in the Ordinance contained by and on behalf of the City shall be for the sole and exclusive benefit of the City, the Trustee, and the Registered Holders of the Series 2020 Bonds.

Section 14. **Additional Provisions**. As supplemented herein, the General Ordinance remains in full force and effect and shall govern the issuance of the Series 2020 Bonds.

Section 15. **Additional Documents**. The Mayor, Clerk of the City and Chief Financial Officer are fully authorized and empowered to take any further action and to execute and deliver any closing documents as may be necessary and proper to effect the delivery of the Series 2020 Bonds in accordance with the terms and conditions hereinabove set forth, and the action of the officers or any one or more of them in executing and delivering any documents, in the form as he, she, or they shall approve, is hereby fully authorized.

Section 16. **Section Headings; Table of Contents**. The headings and titles of the several sections hereof, and any Table of Contents appended hereto or to copies hereof, shall be solely for convenience of reference and shall not affect the meaning, construction, interpretation, or effect of this Supplemental Ordinance.

Section 17. **Effective Date**. This Supplemental Ordinance shall become effective immediately upon its adoption.

DONE IN MEETING DULY ASSEMBLED, this 22nd day of September, 2020.

CITY OF CHARLESTON, SOUTH CAROLINA

_____

Mayor

Attest:

City Clerk

First Reading: September 8, 2020
Second Reading: September 22, 2020

EXHIBIT A

CITY OF CHARLESTON, SOUTH CAROLINA,
STORMWATER SYSTEM REFUNDING REVENUE BONDS,
[TAXABLE] SERIES 2020

NO. R-__

INTEREST RATE	MATURITY DATE	ISSUE DATE	CUSIP

REGISTERED HOLDER:

PRINCIPAL AMOUNT:

The **CITY OF CHARLESTON, SOUTH CAROLINA** (the "City"), acknowledges itself indebted and for value received hereby promises to pay, solely from the sources and as hereinafter provided, to the Registered Holder named above or registered assigns, the Principal Amount set forth above on the Maturity Date stated above, unless this Bond be subject to redemption and shall have been redeemed prior thereto as hereinafter provided, upon presentation and surrender of this Bond at the corporate trust office of U.S. Bank National Association (the "Trustee") in the City of _____, State of _____, and to pay interest on such principal amount at the annual Interest Rate stated above (calculated on the basis of a 360-day year of twelve 30-day months) from the later of _____, 2020, or the date to which interest has been paid immediately preceding the authentication date hereof, unless the authentication date hereof is a _____1 or _____ 1, in which event this Bond will bear interest from the earlier of such authentication date or the date to which interest has last been paid; provided that if the City shall fail to pay interest on _____, 2020, then this Bond will bear interest from _____, 2020. Interest on this Bond is payable on _____ 1 and _____1 of each year beginning _____ 1, 2020. The interest so payable on any _____ 1 or _____ 1 will be paid to the person in whose name this Bond is registered at the close of business on the _____ 15 or _____ 15 immediately preceding such _____ 1 or _____ 1 (the "Record Date") by check or draft mailed at the times provided herein from the office of the Trustee to the person in whose name this Bond is registered on the Record Date at the address shown on the registration books, provided that, at the request of the Registered Holder of $1,000,000 or more in aggregate principal amount of Bonds, such payments shall be made by wire transfer to an account within the continental United States as such Registered Holder shall designate in writing to the Trustee on or before the Record Date. The principal of and interest on this Bond are payable in any coin or currency of the United States of America which at the time of payment is legal tender for the payment of public and private debts.

This Bond shall not be valid or obligatory for any purpose until the Certificate of Authentication hereon shall have been duly executed by the Registrar.

This Bond is one of a Series of Bonds in the aggregate principal amount of $_____ (the "Series 2020 Bonds") of like tenor, except as to number, rate of interest, date of maturity and redemption provisions, issued pursuant to and in accordance with the Constitution and statutes of the State of South Carolina (the "State"), including particularly Chapter 21 of Title 6, Code of Laws of South Carolina 1976, as amended (the "Enabling Act"), an ordinance duly adopted by the City Council of the City of Charleston, South Carolina ("City Council") on May 22, 2012 (the "Bond Ordinance"), and an ordinance duly adopted by the City Council on September 22, 2020 (the "Series Ordinance" and together

with the Bond Ordinance, the "Ordinances") for the purpose of providing funds necessary to finance a portion of the costs of certain capital improvements to the Stormwater System of the City (the "System") and to pay costs of issuance.

Certain capitalized terms used herein and not otherwise defined shall have the meanings ascribed thereto in the Ordinances. Certified copies of the Ordinances are on file in the office of the Trustee and in the office of the Clerk of Court for Charleston County, South Carolina.

THIS BOND HAS BEEN ISSUED UNDER THE PROVISIONS OF CHAPTER 21, TITLE 6 OF THE CODE OF LAWS OF SOUTH CAROLINA 1976, AS AMENDED. BOTH THE PRINCIPAL OF AND INTEREST ON THIS BOND, AS THE SAME SHALL BECOME DUE, ARE PAYABLE SOLELY FROM THE REVENUES DERIVED FROM THE OPERATION OF THE SYSTEM. THIS BOND SHALL NOT IN ANY EVENT CONSTITUTE AN INDEBTEDNESS OF THE CITY WITHIN THE MEANING OF ANY PROVISION, LIMITATION OR RESTRICTION OF THE CONSTITUTION OR STATUTES OF THE STATE (OTHER THAN ARTICLE X, SECTION 14, PARAGRAPH 10 OF THE SOUTH CAROLINA CONSTITUTION AUTHORIZING OBLIGATIONS PAYABLE SOLELY FROM SPECIAL SOURCES NOT INVOLVING REVENUES FROM ANY TAX OR LICENSE). THIS BOND SHALL NEVER CONSTITUTE NOR GIVE RISE TO A PECUNIARY LIABILITY OF THE CITY OR A CHARGE AGAINST ITS GENERAL CREDIT OR TAXING POWER. THE FULL FAITH, CREDIT, AND TAXING POWERS OF THE CITY ARE NOT PLEDGED TO THE PAYMENT OF THE PRINCIPAL OF AND INTEREST ON THIS BOND.

For the payment of the principal of and interest on this Bond and the Series of which it forms a part, there are pledged the Revenues of the System which shall remain after paying the cost of operation and maintenance of the System (the "Net Revenues") on a parity with the outstanding original issue of the City's $46,725,000 Stormwater System Revenue Bonds, Series 2012 dated June 19, 2012 (the "Series 2012 Bonds"). The Bond Ordinance authorizes the issuance of additional bonds on a parity with the Series 2012 Bonds and the Series 2020 Bonds, which, when issued in accordance with the provisions of the Bond Ordinance, will rank equally and be on a parity therewith. The Series 2012 Bonds, the Series 2020 Bonds and any such additional parity bonds are hereinafter referred to collectively as the "Bonds."

The City has covenanted to continuously operate and maintain the System and fix and maintain such rates for the services and facilities furnished by the System as shall at all times be sufficient (a) to provide for the punctual payment of the principal of and interest on the Bonds and all Junior Lien Bonds, (b) to provide for the payment of the expenses of the administration and operation and such expenses for maintenance of the System as may be necessary to preserve the same in good repair and working order, (c) to build and maintain a reserve for depreciation of the System, for contingencies and for improvements, betterments and extensions to the System other than those necessary to maintain the same in good repair and working order, and (d) to discharge all obligations imposed by the Enabling Act and the Ordinances.

This Bond and the interest hereon are exempt from all State, county, municipal, school district, and all other taxes or assessments imposed within the State, direct or indirect, general or special, whether imposed for the purpose of general revenue or otherwise, except estate, transfer taxes and certain franchise taxes.

This Bond is transferable, as provided in the Bond Ordinance, only upon the registration books of the City kept for that purpose by the Trustee or other Registrar, by the Holder hereof in person or by his duly authorized attorney, upon (a) surrender of this Bond and an assignment with a written instrument of transfer satisfactory to the Trustee or the other Registrar, as the case may be, duly executed by the Holder hereof or his duly authorized attorney and (b) payment of the charges, if any, prescribed in the Bond

Ordinance. Thereupon a new Bond or Bonds of the same Series, aggregate principal amount, maturity and interest rate shall be issued to the transferee in exchange therefor as provided in the Bond Ordinance. The City, the Trustee and the Registrar may deem and treat the person in whose name this Bond is registered as the absolute owner hereof for the purpose of receiving payment of or on account of the principal or redemption price hereof and interest due hereon and for all other purposes.

For every exchange or transfer of this Bond the City, the Trustee or Registrar, as the case may be, may make a charge sufficient to reimburse it for any tax, fee or other governmental charge required to be paid with respect to such exchange or transfer.

[The Bonds maturing _____, 20__, and thereafter, are subject to redemption prior to maturity, at the option of the City, on and after _____, 20__, in whole or in part at any time (but if in part, in such order of maturities as shall be determined by the City) at the redemption price of par plus interest accrued to the redemption date.]

[The Bonds maturing on _____, 20__, are subject to mandatory sinking fund redemption commencing _____, 20__, and will be redeemed (to the extent not previously redeemed), at 100% of the principal amount, plus interest accrued to the redemption date, on _____ 1 of each of the following years in the respective principal amounts for each year specified below:

Year	Amount
*	

*Final maturity

The amount of the mandatory sinking fund redemption prescribed above for the Bonds of any maturity shall be reduced to the extent Bonds of such maturity have been purchased by the City or redeemed by the City pursuant to the optional redemption provisions set forth above, in such manner as the City shall direct, or, absent such direction, on a pro rata basis.

If less than all of any maturity of the Bonds are to be redeemed, the particular Bonds or portions of Bonds to be redeemed shall be selected by the Trustee by lot. Bonds in a denomination of more than $5,000 may be redeemed in part from time to time in one or more units of $5,000 in the manner provided in the Bond Ordinance.

If any of the Bonds, or portions thereof, are called for redemption, the Trustee will give notice to the Holders of any such Bonds to be redeemed, in the name of the City, of the redemption of such Bonds, or portions thereof, which notice will specify the Bonds to be redeemed, the redemption date and the place or places where amounts due upon such redemption will be payable and, if less than all of the Bonds are to be redeemed, the numbers of such Bonds so to be redeemed, and, in the case of Bonds to be redeemed in part only, such notice will also specify the respective portions of the principal amount thereof to be redeemed. Such notice will be given by mailing a copy of the redemption notice by first class mail at least 30 days prior to the date fixed for redemption to the Holder of each Bond to be redeemed, at the address shown on the registration books; provided, however, that the failure to give such notice by mail, or any defect in the notice mailed to the Holder of any Bond, shall not affect the validity of the proceedings for the redemption of any other Bond. Provided funds for their redemption are on

deposit with the Trustee, all Bonds so called for redemption will cease to bear interest on the specified redemption date.]

It is hereby certified and recited that all conditions, acts and things required by the Constitution and statutes of the State to exist, be performed or happen precedent to or in the issuance of this Bond, exist, have been performed and have happened and that the amount of this Bond, together with all other indebtedness of the City, does not exceed any limit prescribed by such Constitution or statutes.

IN WITNESS WHEREOF, THE CITY OF CHARLESTON, SOUTH CAROLINA, has caused this Bond to be signed by the signature of its Mayor, its corporate seal to be reproduced hereon and the same to be attested by the signature of the Clerk of the City Council of the City of Charleston, South Carolina.

CITY OF CHARLESTON, SOUTH CAROLINA

(SEAL)

By_____
Mayor, City of Charleston, South Carolina

Attest:

By_____
Clerk, City Council of the City of Charleston,
South Carolina

CERTIFICATE OF AUTHENTICATION

This Bond is one of the Bonds of the Series described in the within mentioned Ordinances.

U.S. BANK NATIONAL ASSOCIATION, as Trustee

_____

Authorized Agent

Authentication Date: _____, 2020

ASSIGNMENT

FOR VALUE RECEIVED the undersigned hereby sells, assigns and transfers unto _____ (please print or type name and address of Transferee and Social Security or other identifying number of Transferee) the within Bond and all rights and title thereunder, and hereby irrevocably constitutes and appoints _____ attorney to transfer the within Bond on the books kept for registration thereof, with full power of substitution in the premises.

Date:_____ _____

Signature Guaranteed:

_____

_____

NOTICE: Signature must be guaranteed by an institution which is a participant in the Securities Transfer Agent Medallion Program (STAMP) or similar program. The signature to this assignment must correspond with the name as it appears upon the face of the within bond in every particular, without alteration or enlargement or any change whatever.

COMMITTEE / COUNCIL AGENDA

7.)

TO: John J. Tecklenburg, Mayor

FROM: Luther T. Reynolds DEPT. Police Department

SUBJECT: MOU BETWEEN CPD AND DRUG ENFORCEMENT ADMINISTRATION

REQUEST: Approve MOU between CPD and United States Department of Justice, Drug Enforcement Administration regarding CPD's Participation in the DEA's Charleston Resident Office Task Force.

COMMITTEE OF COUNCIL: _____ DATE: _____

COORDINATION: This request has been coordinated with: *(attach all recommendations/reviews)*

	Yes	N/A	Signature of Individual Contacted	Attachment
Police Chief	X		Luther T Reynolds	X
Corporation Counsel	X			

FUNDING: Was funding previously approved? Yes ☐ No ☐ N/A ☒

If yes, provide the following: Dept./Div: _____ Account #:: _____

Balance in Account _____ Amount needed for this item _____

NEED: Identify any critical time constraint(s).

CFO's Signature: _____

FISCAL IMPACT:

Mayor's Signature: _____
John J. Tecklenburg, Mayor

ORIGINATING OFFICE PLEASE NOTE: A FULLY STAFFED/APPROVED (except Mayor's Signature) PACKAGE IS DUE IN THE CLERK OF COUNCIL'S OFFICE NO LATER THAN 10:00AM THE DAY OF THE CLERK'S AGENDA MEETING.

PROGRAM - FUNDED STATE AND LOCAL TASK FORCE AGREEMENT

This agreement is made this 1st day of October, 2020, between the United States Department of Justice, Drug Enforcement Administration (hereinafter "DEA"), and the Charleston, South Carolina Police Department ORI# SC0100100 (hereinafter "CPD"). The DEA is authorized to enter into this cooperative agreement concerning the use and abuse of controlled substances under the provisions of 21 U.S.C. § 873.

WHEREAS there is evidence that trafficking in narcotics and dangerous drugs exists in the Southeastern counties of South Carolina including but not limited to the greater Charleston, South Carolina metropolitan area and that such illegal activity has a substantial and detrimental effect on the health and general welfare of the people of Southeastern counties of South Carolina including but not limited to the greater Charleston, South Carolina metropolitan area, the parties hereto agree to the following:

1. The Charleston Resident Office Task Force will perform the activities and duties described below:

    a. disrupt the illicit drug traffic in the Southeastern counties of South Carolina including but not limited to the greater Charleston, South Carolina metropolitan area by immobilizing targeted violators and trafficking organizations;

    b. gather and report intelligence data relating to trafficking in narcotics and dangerous drugs; and

    c. conduct undercover operations where appropriate and engage in other traditional methods of investigation in order that the Task Force's activities will result in effective prosecution before the courts of the United States and the State of South Carolina.

2. To accomplish the objectives of the Charleston Resident Office Task Force, the CPD agrees to detail one (1) experienced officers to the Charleston Resident Office Task Force for a period of not less than two years. During this period of assignment, the CPD officers will be under the direct supervision and control of DEA supervisory personnel assigned to the Task Force.

3. The CPD officers assigned to the Task Force shall adhere to DEA policies and procedures. Failure to adhere to DEA policies and procedures shall be grounds for dismissal from the Task Force.

4. TheCPD officers assigned to the Task Force shall be deputized as Task Force Officers of DEA pursuant to 21 U.S.C. Section 878.

5. To accomplish the objectives of the Charleston Resident Office Task Force, DEA will assign six (6) Special Agents to the Task Force. DEA will also, subject to the availability of annually appropriated funds or any continuing resolution thereof, provide necessary funds and assigned to the Task Force. This support will include: office space, office supplies, travel funds, funds for thepurchase of evidence and information, investigative equipment, training, and other support items.

6. During the period of assignment to the Task Force, the CPD will remain responsible for establishing the salary and benefits, including overtime, of the officers assigned to the Task Force, and for making all payments due them. DEA will, subject to availability of funds, reimburse the CPD for overtime payment. Annual overtime for each state or local law enforcement officer is capped at the equivalent of 25% of a GS-12, Step 1, of the general pay scale for the Rest of United States. Reimbursement for all types of qualified expenses shall be contingent upon availability of funds and the submission of a proper request for reimbursement which shall be submitted **monthly or quarterly** on a fiscal year basis, and which provides the names of the investigators who incurred overtime for DEA during the invoiced period, the number of overtime hours incurred, the hourly regular and overtime rates in effect for each investigator, and the total cost for the invoiced period. Invoices must be submitted at least quarterly within 10 business days of the end of the invoiced period. **Note: Task Force Officer's overtime "shall not include any costs for benefits, such as retirement, FICA, and other expenses."**

7. In no event will the CPD charge any indirect cost rate to DEA for the administration or implementation of this agreement.

8. The CPD shall maintain on a current basis complete and accurate records and accounts of all obligations and expenditures of funds under this agreement in accordance with generally accepted accounting principles and instructions provided by DEA to facilitate on-site inspection and auditing of such records and accounts.

9. The CPD shall permit and have readily available for examination and auditing by DEA, the United States Department of Justice, the Comptroller General of the United States, and any of their duly authorized agents and representatives, any and all records, documents, accounts, invoices, receipts or expenditures relating to this agreement. The CPD shall maintain all such reports and records until all audits and examinations are completed and resolved, or for a period of six (6) years after termination of this agreement, whichever is sooner.

10. The CPD shall comply with Title VI of the Civil Rights Act of 1964, Section 504 of the Rehabilitation Act of 1973, the Age Discrimination Act of 1975, as amended, and all requirements imposed by or pursuant to the regulations of the United States Department of Justice implementing those laws, 28 C.F.R. Part 42, Subparts C, F, G, H and I.

11. The CPD agrees that an authorized officer or employee will execute and return to DEA the attached OJP Form 4061/6, Certification Regarding Lobbying; Debarment, Suspension and Other Responsibility Matters; and Drug-Free Workplace Requirements. The CPD acknowledges that this agreement will not take effect and no Federal funds will be awarded to the CPD by DEA until the completed certification is received.

12. When issuing statements, press releases, requests for proposals, bid solicitations, and other documents describing projects or programs funded in whole in part with Federal money, the CPD shall clearly state (1) the percentage of the total cost of the program or project which will be financed with Federal money and (2) the dollar amount of Federal funds for the project or program.

13. The term of this agreement shall be effective from the date in paragraph number one until September 30, 2021. This agreement may be terminated by either party on thirty days' advance written notice. Billing for all outstanding obligations must be received by DEA within 90 days of the date of termination of this agreement. DEA will be responsible only for obligations incurred by CPD during the term of this agreement.

For the Drug Enforcement Administration:

_____ Date: _____

Robet J. Murphy

_____

Special Agent-in-Charge

For the Charleston Police Department

Luther T. Reynolds

Luther T. Reynolds Date: 8-28-20

Chief of Police

For the City of Charleston

John J. Tecklenberg

Date: _____

_____
Mayor

U.S. DEPARTMENT OF JUSTICE
OFFICE OF JUSTICE PROGRAMS
OFFICE OF THE COMPTROLLER

CERTIFICATIONS REGARDING LOBBYING; DEBARMENT, SUSPENSION AND OTHER RESPONSIBILITY MATTERS; AND DRUG-FREE WORKPLACE REQUIREMENTS

Applicants should refer to the regulations cited below to determine the certification to which they are required to attest. Applicants should also review the instructions for certification included in the regulations before completing this from. Signature of this form provides for compliance with certification requirements under 28 CFR Part 69, "New Restrictions on Lobbying" and 28 CFR Part 67, "Government-wide Department and Suspension (Nonprocurement) and Government-wide Requirements for Drug-Free Workplace (Grants)." The certifications shall be treated as a material representation of fact upon reliance will be placed when the Department of Justice determines to award the covered transaction, grant, or cooperative agreement

1. LOBBYING

As required by Section 1352, Title 31 of the U.S. Code and implemented at 28 CFR Part 69, for persons entering into a grant or cooperative agreement over $100,000, as defined at 28 CFR Part 69, the applicant certifies that:

(a) No Federal appropriate funds have been paid or will be paid, by or on behalf of the undersigned, to any person for influencing or attempting to influence an officer or employee of any agency, a Member of Congress, an officer or employee of Congress, or an employee of a Member of Congress in connection with the making of any Federal grant, the entering into of any cooperative agreement, and extension, continuation, renewal, amendment, or modification of any Federal grant or cooperative agreement;

(b) If any funds other than Federal appropriated funds have been paid or will be paid to any person for influencing or attempting to influence an officer or employee of any agency, a Member of Congress, an officer or employee of Congress, or an employee of a Member of Congress in connection with this Federal grant or cooperative agreement, the undersigned shall complete and submit Standard Form - LLL, "Disclosure of Lobbying Activities," in accordance with its instructions;

(c) The undersigned shall require that the language of this certification be included in the award documents for all subawards at all tiers (including subgrants, contracts under grants and cooperative agreements, and subcontracts) and that all sub-recipients shall certify and disclose accordingly.

2. DEBARMENT, SUSPENSION, AND OTHER RESPONSIBILITY MATTERS (DIRECT RECIPIENT)

As required by Executive Order 12549, Debarment and Suspension, and implemented at 28 CFR Prt 67, for prospective participants, in primary covered transactions, as defined at 28 CFR Part 67, Section 67.510-

A. The applicant certifies that it and its principals:

(a) Are not presently debarred, suspended, proposed for debarment, declared ineligible, sentenced to a denial of Federal benefits by a State or Federal court, or voluntarily excluded from covered transactions by any Federal department or agency;

(b) Have not within a three-year period preceding this application been convicted of or had a civil judgment rendered against them for commission of fraud or a criminal offense in connection with obtaining, attempting to obtain, or performing a public (Federal, State, or local) transaction or contract under a public transaction; violation of Federal or State antitrust statutes or commission of embezzlement, theft, forgery, bribery, falsification or destruction of records, making false statements or receiving stolen property;

(c) Are not presently indicted for or otherwise criminally or civilly charged by a governmental entity (Federal, State, or local) with commission of any of the offenses enumerated in paragraph (1) (b) of this certification; and

(d) Have not within a three-year period preceding this application had one or more public transactions (Federal, State, or local) terminated for cause or default; and

B. Where the applicant is unable to certify to any of the statements in this certification, he or she shall attach an explanation to this application.

3. DRUG-FREE WORKPLACE (GRANTEES OTHER THAN INDIVIDUALS)

As required by the Drug-Free Workplace Act of 1988, and implemented at 28 CFR Part 67, Subpart F, for grantees, as defined at 28 CFR Part 67 Sections 67.615 and 67.620-

A. The applicant certifies that it will or will continue to provide a drug-free workplace by:

(a) Publishing a statement notifying employees that the unlawful manufacture, distribution, dispensing, possession, or use of a controlled substance is prohibited in the grantee's workplace and specifying the actions that will be taken against employees for violation of such prohibition;

(b) Establishing an on-going drug-free awareness program to inform employees about-

(1) The dangers of drugs abuse in the workplace;

(2) The grantee's policy of maintaining a drug-free workplace;

(3) Any available drug counseling, rehabilitation, and employee assistance programs; and

(4) The penalties that may be imposed upon employees for drug abuse violations occurring in the workplace;

(c) Making it a requirement that each employee to be engaged in the performance of the grant be given a copy of the statement required by paragraph (a);

(d) Notifying the employee in the statement required by paragraph (a) that, as a condition of employment under the grant, the employee will-

(1) Abide by the terms of the statement; and

(2) Notify the employer in writing of his or her conviction for a violation of a criminal drug statute occurring in the workplace no later than five calendar days after such conviction;

(e) Notifying the agency, in writing, within 10 calendar days after receiving notice under subparagraph (d)(2) from an employee or otherwise receiving actual notice of such conviction. Employers of convicted employees must provide notice, including position title, to: Department of Justice, Office of Justice Programs, ATTN: Control Desk, 633 Indiana Avenue, N.W., Washington, D.C. 20531. Notice shall include the identification number(s) of each affected grant;

(f) Taking one of the following actions within 30 calendar days of receiving notice under subparagraph (d)(2), with respect to any employee who is so convicted-

(1) Taking appropriate personnel action against such an employee, up to and including termination, consistent with the requirements of the Rehabilitation Act of 1973, as amended; or

(2) Requiring such employee to participate satisfactorily in a drug abuse assistance or rehabilitation program approved for such purposes by a Federal, State, or local health, law enforcement, or other appropriate agency;

(g) Making a good faith effort to continue to maintain a drug- free workplace through implementation of paragraphs (a), (b), (c), (d), (e), and (f).

B. The grantee may insert in the space provided below the site (s) for the performance of work done in connection with the specific grant:

Place of Performance (Street address, city, country, state, zip code)

3950 Faber Place Drive, Suite 200
North Charleston, SC 29405

Check if there are workplace on file that are not identified here.

Section 67. 630 of the regulations provides that a grantee that is a State may elect to make one certification in each Federal fiscal year. A copy of which should be included with each application for Department of Justice funding. States and State agencies may elect to use OJP Form 4061/7

Check if the State has elected to complete OJP Form 4061/7

DRUG-FREE WORKPLACE (GRANTEES WHO ARE INDIVIDUALS)

As required by the Drug-Free Workplace Act of 1988, and implemented at 28 CFR Part 67, Subpart F for grantees, as defined at 28 CFR Part 67, Sections 67 615 and 67.620-

A. As a condition of the grant, I certify that I will not engage in the unlawful manufacture, distribution, dispensing, possession, or use of a controlled substance in condition any activity with the grant, and

B. If convinced of a criminal drug offense resulting from a violation occurring during the conduct of any grant activity, I will report the conviction, in writing, within 10 calendar days of the conviction to: Department of Justice, Office of Justice Programs, ATTN: Control Desk, 633 Indiana Avenue, N W. Washington, D C 20531

As the duly authorized representative of the applicant, I hereby certify that the applicant will comply with the above certifications.

1 Grantee Name and Address:

Charleston, S.C. Police Department
180 Lockwood Boulevard
Charleston, SC 29403

2 Application Number and/or Project Name

DEA Task Force Agreement

3 Grantee IRS/Vendor Number

57-6000226

4 Typed Name and Title of Authorized Representative

Luther T. Reynolds, Chief of Police

5. Signature

Luther T. Reynolds

6. Date

8-28-70

PROGRAM - FUNDED STATE AND LOCAL TASK FORCE AGREEMENT

This agreement is made this 1st day of October, 2020, between the United States Department of Justice, Drug Enforcement Administration (hereinafter "DEA"), and the Charleston, South Carolina Police Department ORI# SC0100100 (hereinafter "CPD"). The DEA is authorized to enter into this cooperative agreement concerning the use and abuse of controlled substances under the provisions of 21 U.S.C. § 873.

WHEREAS there is evidence that trafficking in narcotics and dangerous drugs exists in the Southeastern counties of South Carolina including but not limited to the greater Charleston, South Carolina metropolitan area and that such illegal activity has a substantial and detrimental effect on the health and general welfare of the people of Southeastern counties of South Carolina including but not limited to the greater Charleston, South Carolina metropolitan area, the parties hereto agree to the following:

1. The Charleston Resident Office Task Force will perform the activities and duties described below:

    a. disrupt the illicit drug traffic in the Southeastern counties of South Carolina including but not limited to the greater Charleston, South Carolina metropolitan area by immobilizing targeted violators and trafficking organizations;

    b. gather and report intelligence data relating to trafficking in narcotics and dangerous drugs; and

    c. conduct undercover operations where appropriate and engage in other traditional methods of investigation in order that the Task Force's activities will result in effective prosecution before the courts of the United States and the State of South Carolina.

2. To accomplish the objectives of the Charleston Resident Office Task Force, the CPD agrees to detail one (1) experienced officers to the Charleston Resident Office Task Force for a period of not less than two years. During this period of assignment, the CPD officers will be under the direct supervision and control of DEA supervisory personnel assigned to the Task Force.

3. The CPD officers assigned to the Task Force shall adhere to DEA policies and procedures. Failure to adhere to DEA policies and procedures shall be grounds for dismissal from the Task Force.

4. TheCPD officers assigned to the Task Force shall be deputized as Task Force Officers of DEA pursuant to 21 U.S.C. Section 878.

5. To accomplish the objectives of the Charleston Resident Office Task Force, DEA will assign six (6) Special Agents to the Task Force. DEA will also, subject to the availability of annually appropriated funds or any continuing resolution thereof, provide necessary funds and assigned to the Task Force. This support will include: office space, office supplies, travel funds, funds for thepurchase of evidence and information, investigative equipment, training, and other support items.

6. During the period of assignment to the Task Force, the CPD will remain responsible for establishing the salary and benefits, including overtime, of the officers assigned to the Task Force, and for making all payments due them. DEA will, subject to availability of funds, reimburse the CPD for overtime payment. Annual overtime for each state or local law enforcement officer is capped at the equivalent of 25% of a GS-12, Step 1, of the general pay scale for the Rest of United States. Reimbursement for all types of qualified expenses shall be contingent upon availability of funds and the submission of a proper request for reimbursement which shall be submitted **monthly or quarterly** on a fiscal year basis, and which provides the names of the investigators who incurred overtime for DEA during the invoiced period, the number of overtime hours incurred, the hourly regular and overtime rates in effect for each investigator, and the total cost for the invoiced period. Invoices must be submitted at least quarterly within 10 business days of the end of the invoiced period. **Note: Task Force Officer's overtime "shall not include any costs for benefits, such as retirement, FICA, and other expenses."**

7. In no event will the CPD charge any indirect cost rate to DEA for the administration or implementation of this agreement.

8. The CPD shall maintain on a current basis complete and accurate records and accounts of all obligations and expenditures of funds under this agreement in accordance with generally accepted accounting principles and instructions provided by DEA to facilitate on-site inspection and auditing of such records and accounts.

9. The CPD shall permit and have readily available for examination and auditing by DEA, the United States Department of Justice, the Comptroller General of the United States, and any of their duly authorized agents and representatives, any and all records, documents, accounts, invoices, receipts or expenditures relating to this agreement. The CPD shall maintain all such reports and records until all audits and examinations are completed and resolved, or for a period of six (6) years after termination of this agreement, whichever is sooner.

10. The CPD shall comply with Title VI of the Civil Rights Act of 1964, Section 504 of the Rehabilitation Act of 1973, the Age Discrimination Act of 1975, as amended, and all requirements imposed by or pursuant to the regulations of the United States Department of Justice implementing those laws, 28 C.F.R. Part 42, Subparts C, F, G, H and I.

11. The CPD agrees that an authorized officer or employee will execute and return to DEA the attached OJP Form 4061/6, Certification Regarding Lobbying; Debarment, Suspension and Other Responsibility Matters; and Drug-Free Workplace Requirements. The CPD acknowledges that this agreement will not take effect and no Federal funds will be awarded to the CPD by DEA until the completed certification is received.

12. When issuing statements, press releases, requests for proposals, bid solicitations, and other documents describing projects or programs funded in whole in part with Federal money, the CPD shall clearly state (1) the percentage of the total cost of the program or project which will be financed with Federal money and (2) the dollar amount of Federal funds for the project or program.

13. The term of this agreement shall be effective from the date in paragraph number one until September 30, 2021. This agreement may be terminated by either party on thirty days' advance written notice. Billing for all outstanding obligations must be received by DEA within 90 days of the date of termination of this agreement. DEA will be responsible only for obligations incurred by CPD during the term of this agreement.

For the Drug Enforcement Administration:

Robet J. Murphy

Date: _____

Special Agent-in-Charge

For the Charleston Police Department

Luther T. Reynolds

Luther T. Reynolds

Date: 8-28-20

Chief of Police

For the City of Charleston

John J. Tecklenberg

Date: _____

Mayor

U.S. DEPARTMENT OF JUSTICE
OFFICE OF JUSTICE PROGRAMS
OFFICE OF THE COMPTROLLER

CERTIFICATIONS REGARDING LOBBYING; DEBARMENT, SUSPENSION AND OTHER RESPONSIBILITY MATTERS; AND DRUG-FREE WORKPLACE REQUIREMENTS

Applicants should refer to the regulations cited below to determine the certification to which they are required to attest. Applicants should also review the instructions for certification included in the regulations before completing this form. Signature of this form provides for compliance with certification requirements under 28 CFR Part 69, "New Restrictions on Lobbying" and 28 CFR Part 67, "Government-wide Department and Suspension (Nonprocurement) and Government-wide Requirements for Drug-Free Workplace (Grants)." The certifications shall be treated as a material representation of fact upon reliance will be placed when the Department of Justice determines to award the covered transaction, grant, or cooperative agreement.

1. LOBBYING

As required by Section 1352, Title 31 of the U.S. Code, and implemented at 28 CFR Part 69, for persons entering into a grant or cooperative agreement over $100,000, as defined at 28 CFR Part 69, the applicant certifies that

(a) No Federal appropriate funds have been paid or will be paid, by or on behalf of the undersigned, to any person for influencing or attempting to influence an officer or employee of any agency, a Member of Congress, an officer or employee of Congress, or an employee of a Member of Congress in connection with the making of any Federal grant, the entering into of any cooperative agreement, and extension, continuation, renewal, amendment, or modification of any Federal grant or cooperative agreement;

(b) If any funds other than Federal appropriated funds have been paid or will be paid to any person for influencing or attempting to influence an officer or employee of any agency, a Member of Congress, an officer or employee of Congress, or an employee of a Member of Congress in connection with this Federal grant or cooperative agreement, the undersigned shall complete and submit Standard Form - LLL, "Disclosure of Lobbying Activities," in accordance with its instructions;

(c) The undersigned shall require that the language of this certification be included in the award documents for all subawards at all tiers (including subgrants, contracts under grants and cooperative agreements, and subcontracts) and that all sub-recipients shall certify and disclose accordingly.

2. DEBARMENT, SUSPENSION, AND OTHER RESPONSIBILITY MATTERS (DIRECT RECIPIENT)

As required by Executive Order 12549, Debarment and Suspension, and implemented at 28 CFR Prt 67, for prospective participants in primary covered transactions, as defined at 28 CFR Part 67, Section 67.510-

A. The applicant certifies that it and its principals

(a) Are not presently debarred, suspended proposed for debarment, declared ineligible, sentenced to a denial of Federal benefits by a State or Federal court, or voluntarily excluded from covered transactions by any Federal department or agency;

(b) Have not within a three-year period preceding this application been convicted of or had a civil judgment rendered against them for commission of fraud or a criminal offense in connection with obtaining, attempting to obtain, or performing a public (Federal, State or local) transaction or contract under a public transaction; violation of Federal or State antitrust statutes or commission of embezzlement, theft, forgery, bribery, falsification or destruction of records, making false statements, or receiving stolen property;

(c) Are not presently indicted for or otherwise criminally or civilly charged by a governmental entity (Federal, State, or local) with commission of any of the offenses enumerated in paragraph (1) (b) of this certification; and

(d) Have not within a three-year period preceding this application had one or more public transactions (Federal, State, or local) terminated for cause or default; and

B. Where the applicant is unable to certify to any of the statements in this certification, he or she shall attach an explanation to this application.

3. DRUG-FREE WORKPLACE (GRANTEES OTHER THAN INDIVIDUALS)

As required by the Drug-Free Workplace Act of 1988, and implemented at 28 CFR Part 67, Subpart F, for grantees, as defined at 28 CFR Part 67 Sections 67.615 and 67.620-

A. The applicant certifies that it will or will continue to provide a drug-free workplace by:

(a) Publishing a statement notifying employees that the unlawful manufacture, distribution, dispensing, possession, or use of a controlled substance is prohibited in the grantee's workplace and specifying the actions that will be taken against employees for violation of such prohibition;

(b) Establishing an on-going drug-free awareness program to inform employees about-

(1) The dangers of drugs abuse in the workplace;

(2) The grantee's policy of maintaining a drug-free workplace;

(3) Any available drug counseling, rehabilitation, and employee assistance programs; and

(4) The penalties that may be imposed upon employees for drug abuse violations occurring in the workplace;

(c) Making it a requirement that each employee to be engaged in the performance of the grant be given a copy of the statement required by paragraph (a);

(d) Notifying the employee in the statement required by paragraph (a) that, as a condition of employment under the grant, the employee will-

(1) Abide by the terms of the statement; and

(2) Notify the employer in writing of his or her conviction for a violation of a criminal drug statute occurring in the workplace no later than five calendar days after such conviction;

(e) Notifying the agency, in writing, within 10 calendar days after receiving notice under subparagraph (d)(2) from an employee or otherwise receiving actual notice of such conviction. Employers of convicted employees must provide notice, including position title, to: Department of Justice, Office of Justice Programs, ATTN: Control Desk, 633 Indiana Avenue, N.W., Washington, D.C. 20531. Notice shall include the identification number(s) of each affected grant;

(f) Taking one of the following actions, within 30 calendar days of receiving notice under subparagraph (d)(2), with respect to any employee who is so convicted-

(1) Taking appropriate personnel action against such an employee, up to and including termination, consistent with the requirements of the Rehabilitation Act of 1973, as amended; or

(2) Requiring such employee to participate satisfactorily in a drug abuse assistance or rehabilitation program approved for such purposes by a Federal, State, or local health, law enforcement or other appropriate agency;

(g) Making a good faith effort to continue to maintain a drug- free workplace through implementation of paragraphs (a), (b), (c), (d), (e), and (f).

B. The grantee may insert in the space provided below the site (s) for the performance of work done in connection with the specific grant:

Place of Performance (Street address, city, country, state, zip code)

395 Faber Place Drive, Suite 20
North Charleston, SC 29405

Check if there are workplace on file that are not identified here

Section 67. 630 of the regulations provides that a grantee that is a State may elect to make one certification in each Federal fiscal year. A copy of which should be included with each application for Department of Justice funding. States and State agencies may elect to use OJP Form 4061/7

Check if the State has elected to complete OJP Form 4061/7.

DRUG-FREE WORKPLACE
(GRANTEES WHO ARE INDIVIDUALS)

As required by the Drug-Free Workplace Act of 1988, and implemented at 28 CFR Part 67, Subpart F, for grantees, as defined at 28 CFR Part 67, Sections 67.615 and 67.620-

A. As a condition of the grant, I certify that I will not engage in the unlawful manufacture, distribution, dispensing, possession, or use of a controlled substance in condition any activity with the grant, and

B. If convinced of a criminal drug offense resulting from a violation occurring during the conduct of any grant activity, I will report the conviction, in writing, within 10 calendar days of the conviction, to Department of Justice, Office of Justice Programs, ATTN: Control Desk, 633 Indiana Avenue, N.W., Washington, D.C. 20531

As the duly authorized representative of the applicant, I hereby certify that the applicant will comply with the above certifications

1. Grantee Name and Address:

Charleston, S.C. Police Department
180 Lockwood Boulevard
Charleston, SC 29403

2 Application Number and/or Project Name

DEA Task Force Agreement

3 Grantee IRS/Vendor Number

57-6000226

4 Typed Name and Title of Authorized Representative

Luther T. Reynolds, Chief of Police

5. Signature

Luther T. Reynolds

6. Date

8-28-20

COMMITTEE / COUNCIL AGENDA

8.)

TO: John J. Tecklenburg, Mayor

FROM: Luther Reynolds DEPT. CPD

SUBJECT: MEMORANDUM OF AGREEMENT BETWEEN CPD AND BCSD RE: SRO'S

REQUEST: APPROVAL OF MEMORANDUM OF AGREEMENT BETWEEN CPD AND BERKELEY COUNTY SCHOOL DISTRICT REGARDING SRO'S FOR 2020-21 SCHOOL YEAR.

COMMITTEE OF COUNCIL: _____ DATE: _____

COORDINATION: This request has been coordinated with: *(attach all recommendations/reviews)*

	Yes	N/A	Signature of Individual Contacted	Attachment
Chief of Police	X		Luther Reynolds	X
Corporation Counsel	X			

FUNDING: Was funding previously approved? Yes ☐ No ☐ N/A ☐

If yes, provide the following: Dept./Div: _____ Account #:: _____

Balance in Account _____ Amount needed for this item _____

NEED: Identify any critical time constraint(s).

CFO's Signature: _____

FISCAL IMPACT:

Mayor's Signature: _____
John J. Tecklenburg, Mayor

ORIGINATING OFFICE PLEASE NOTE: A FULLY STAFFED/APPROVED (except Mayor's Signature) PACKAGE IS DUE IN THE CLERK OF COUNCIL'S OFFICE NO LATER THAN 10:00AM THE DAY OF THE CLERK'S AGENDA MEETING.

BERKELEY COUNTY

Deon Jackson, Senior Associate Superintendent

July 14, 2020

RECEIVED
JUL 16 2020
CHIEF'S OFFICE

City of Charleston Police Department
ATTN: Chief Luther Reynolds
180 Lockwood Boulevard
Charleston, SC 29403

Dear Chief Reynolds:

Enclosed please find the School Resource Officer contract for the 2020-2021 school year for your review. Once you have signed the contract, please retain a copy for your records and return the original to my office by August 1, 2020.

We look forward to working with your department during the upcoming school year. If you have any questions concerning the contract, please feel free to call me.

Sincerely,

Deon Jackson
Senior Associate Superintendent

Enclosure: as stated

107 E. Main Street, P.O. Box 608 ◆ Moncks Corner, South Carolina 29461 ◆ 843-899-8377

BERKELEY COUNTY

AGREEMENT BETWEEN

The Berkeley County School District
And
the City of Charleston Police Department
For
The School Resource Officer Program
(SCHOOL YEAR 2020-2021)

Rights and Duties of the Agency

The Agency shall provide School Resource Officers (hereinafter referred to as "S.R.O.s") as follows:

A. Number of School Resource Officers

1. The Agency shall assign one regularly employed officer to the following school:

	TOTAL
Daniel Island School	**$37,699.00**

2. The Agency shall provide a semester and yearly report of services and criminal incidents to the Superintendent. The end of-the-year report will include trend data with a narrative explanation.

B. Reimbursement for Services and Length of Contract

1. The Berkeley County School District will reimburse the Agency $37,699.00 for an officer on campus for the 190 staff/student days, an additional $11,500.00 for summer school (if applicable), and other rates, as detailed in this contract, at times when the officer is needed. If the position becomes vacant for an extended length of time, the reimbursement will be prorated. Summer schools are normally 30 days in length. Anything more or less will be prorated. The agency may temporarily reassign any S.R.O. during the period of a law enforcement emergency.
2. The S.R.O. assigned to the school will be permitted to travel to off-campus programs in the City of Charleston and Berkeley County that are a part of the school, at the request of the administration and with the consent of the Chief of Police or his designee, for educational purposes and emergencies.
3. In cases of emergency or unusual circumstances with the discretion of the Agency, an S.R.O. may be temporarily assigned such duties at the middle school level to insure the continued physical and psychological well-being of the students. A record shall be kept of the dates of each such temporary assignment and circumstances warranting it. This record shall be made part of the report required by the section of this contract entitled "Program Goals and Evaluation."

C. Duties of School Resource Officers

1. Instructional responsibility for S.R.O.s at the schools:

   a. The S.R.O. shall act as an instructor for specialized, short-term programs at all schools, when invited to do so by the principal or a member of the faculty.
   b. The S.R.O. shall act in the capacity of law enforcement, teacher and counselor for Public Safety classes.

2. Additional duties and responsibilities of all S.R.O.s:

   a. The S.R.O. shall coordinate all of his / her activities and programs with the principal and staff members concerned and will seek permission, advice, and guidance prior to enactment.
   b. The S.R.O. shall develop expertise in presenting various subjects to students. Such subjects shall include a basic understanding of the laws, the role of the law enforcement officer, and his / her duties. The S.R.O. will distribute a program evaluation form to all students and the teacher after each session. This information will be kept on file yearly by the principal and subject to review by the school district and the Agency.
   c. The S.R.O. shall encourage individual and small group discussions with students, based upon material presented in class, to establish rapport with the students.
   d. When requested by the principal, the S.R.O. shall attend parent/faculty meetings to solicit support and understanding of the S.R.O. program.
   e. The S.R.O. shall be available for conference with students, parents, and faculty members in order to assist them with problems of a law enforcement or crime prevention nature. Confidential information obtained is governed by South Carolina Code Title 63 (Proceedings Relating to Juveniles), and shall not be disclosed except as provided by law or court order.
   f. The S.R.O. shall become familiar with all community agencies that offer assistance to youths and their families, such as mental health clinics, drug treatment centers, etc. The S.R.O. shall make referrals to such agencies when necessary thereby acting as a resource person to the students, parents, faculty and staff of the school.
   g. The S.R.O. shall assist the principal in developing plans and strategies to prevent and / or minimize dangerous situations, which may result from student unrest.
   h. Should it become necessary to conduct formal police interviews with the students, the S.R.O. shall inform the principal or his/her designee, adhere to law enforcement policy, as well as legal requirements with regard to such interviews.
   i. The S.R.O. shall take law enforcement action as required. The S.R.O. shall take law enforcement action as required against intruders and unwanted guests who may appear at the school and related school functions, to the extent that the S.R.O. may do so under the authority of law. As soon as practicable, the

S.R.O. shall make the principal of the school aware of such action. (Ref. South Carolina Safe Schools Act)

j. The S.R.O. shall give assistance to other police officers and deputy sheriffs in matters regarding his/her school assignment, whenever necessary. The S.R.O. shall, whenever possible, participate in and/or attend school functions as they relate to the duties of the S.R.O.

k. The S.R.O. shall maintain detailed and accurate records of the School Resource Officer Program on a monthly basis and shall forward it to S.R.O. supervisors who will forward copies to the Superintendent or his designee.

l. The S.R.O. shall not act as a school disciplinarian, as disciplining students is a school responsibility. However, if the incident is a violation of the law, the principal shall contact the S.R.O. or his/her supervisor in a timely manner and the S.R.O. shall then determine whether law enforcement action is appropriate. School Resource Officers are not to be used for regularly assigned lunchroom duties, hall monitors, or other monitoring duties. If there is a problem area, the S.R.O. shall assist the school until the problem is solved.

m. In cases of contested expulsions the Agency will provide case information and/or testimony to the Superintendent or his designee, and shall upon the request of the Superintendent, or his designee, testify at the hearing, unless such testimony could hinder a criminal prosecution.

n. In cases where needed and/or requested, the S.R.O. shall assist in traffic control duties.

3. Co-Curricular Activities and School Functions

a. Upon request of the principal, or his/her designee, and approval of the Chief of Police or his designee, a School Resource Officer may accompany their school to events outside of the City of Charleston and within the State of South Carolina, for the purpose of providing services as authorized by state law. See S.C. Code (Ann.) Sec. 5-7-12. Under no circumstances may the SRO, in an official capacity, accompany their school to events outside the State of South Carolina.

b. When the SRO works outside of the normal weekly work school hours, which includes but is not limited to providing services for the events described in paragraph a above, the payment for the S.R.O. shall be based on a time and a half hourly rate determined by the City of Charleston's Police Department policy, and is in effect upon execution of this agreement. The school requesting the S.R.O.'s services will provide the payment within 45 days of receiving an invoice from the City of Charleston Police Department.

Program Goals and Evaluation

The Agency in conjunction with the Berkeley County School District shall develop program goals and objectives for the School Resource Officers Program. These programs and goals shall be in

line with the Berkeley County School District's action plan for a safe school climate. This means that the S.R.O. will be an active law enforcement official on campus; a classroom instructor; a resource for teachers, students, and parents. This S.R.O. will also be active in conferences, counseling and referrals. Indicators of success shall be developed objectively and independently to measure how well goals and objectives were obtained.

The Agency shall evaluate the effectiveness of the School Resource Officer Program and report annually to the Berkeley County School District no later than July 30 each year.

Rights and Duties of the School Board

The School Board shall provide to the full-time S.R.O. of each high school and middle school the following materials and facilities which are deemed necessary to the performance of the S.R.O. duties.

A. Access to an air-conditioned and properly lighted private office that is not shared. This office shall contain a telephone, which may be used for general business purposes.
B. A location for files and records, which can be properly locked and secured within the office.
C. A desk with drawers, an office chair, worktable, filing cabinet, office supplies and a school issued computer.

Employment Status of School Resource Officer

School Resource Officers shall remain employees of the Agency and shall not be employees of the School District of Berkeley County. The School Board and the Agency acknowledge that the School Resource Officers are employees of the Agency who shall uphold the law under the direct supervision and control of their Agency. School Resource Officers shall remain responsible to the chain of command of the Agency.

Appointment of School Resource Officers

The Agency shall be responsible for recruiting, interviewing, and evaluating School Resource Officers who shall serve at the pleasure of the Agency.

Selection Qualifications

Candidates should have a minimum of eighteen months experience as a certified law enforcement officer.

Candidates should have successfully completed or presently be enrolled in, or be willing to be enrolled in the next available School Resource Officer training course.

Officers applying to the program must be able to speak effectively before a group, to intelligently present a normal and organized program of instruction, and be willing to demonstrate same during an Oral Interview Board prior to becoming a School Resource Officer.

Candidates must be willing to submit to an Oral Interview Board in order to determine their respective abilities. This board will make recommendations to the Agency regarding such candidates that may come before it.

The Oral Interview Board will be convened by the Agency. The Oral Interview Board will consist of eight (8) members of the Agency, the School Superintendent or his/her designee, and the School Board Chairman or his/her designee.

Reassignment/Resignation/ Dismissal of School Resource Officers

In the event the principal of the school to which the S.R.O. is assigned, or the Office of Safety and Security, believes the particular S.R.O. is not effectively performing his or her duties and responsibilities, the principal and/or the Office of Safety and Security shall state these reasons in writing to the Superintendent. Within a reasonable time after receiving the recommendations, the Superintendent or his designee shall advise the Agency or his designee of the concerns. If the Agency so desires, the Superintendent/Director and Agency, or their designees, shall meet with the S.R.O. to mediate or resolve any problems of the school to which the S.R.O. is assigned. If, within a reasonable amount of time after commencement of such mediation the problem cannot be resolved or mediated, or in the event mediation is not sought by the Agency, then the S.R.O. shall be reassigned from the program at the school and a replacement shall be obtained.

The Agency may dismiss or reassign a S.R.O. based upon the Agency's Rules, Regulations, and/or General Orders and when it is in the best interest of the citizens of Berkeley County.

In the event of the resignation, dismissal, or reassignment of an S.R.O., or in the case of absences by a S.R.O., the Agency shall provide a temporary replacement for the S.R.O. immediately and within thirty *(30)* school days of receiving notice of such absence, dismissal, resignation, or reassignment, a replacement will be assigned.

Good Faith

The School Board, the Agency, their agents and employees agree to cooperate in good faith in fulfilling the terms of this Agreement. Unforeseen difficulties or questions will be resolved by negotiation between the Superintendent and the Agency or their designees. The terms of this agreement are subject to change at the end of each school year no later than July 31 of the calendar year. The Agency will review any recommended changes or modifications and the Superintendent or their designees and any recommendations to the agreement will be submitted in writing.

Modification

This document constitutes the full understanding of the parties, and no terms, conditions, understandings or agreements purporting to modify or vary the terms of this document shall be binding unless hereafter made in writing and signed by the party to be charged.

This agreement pertains to the School year commencing on July 1, 2020 through June 30, 2021.

Merger

This Agreement constitutes a final written expression of all the terms of this Agreement and is a complete and exclusive statement of those terms.

IN WITNESS WHEREOF, the parties have caused this Agreement to be signed by their duly authorized officers.

CITY OF CHARLESTON POLICE DEPT.

Witness

Luther Reynolds 7-23-20

Chief Luther Reynolds Date

Witness

Mayor John J. Tecklenberg Date

BERKELEY COUNTY SCHOOL DISTRICT

Witness

7/13/2020

Eddie Ingram, Ed.D. Date
Superintendent

Witness

ADDENDUM TO

AGREEMENT BETWEEN

The Berkeley County School District

And

The City of Charleston Police Department

For

The School Resource Officer Program

(School Year 2020-2021)

This Addendum is attached to and forms part of the agreement set forth in the attached Agreement between the Berkeley County School District and the City of Charleston Police Department for the School Resource Officer Program (School Year 2020-2021) by adding the following language to the existing sections of the Agreement:

Purpose

The School Resource Officer (SRO) will facilitate the development of positive relationships by instilling an atmosphere of approachability, mutual respect, and trust within the school to which the officer is assigned. This is done to create safe and secure school environment while developing and maintaining a successful working relationship between police, school administrators, staff, parents, and students. The School Resource Officer Unit will establish a highly visible police presence in the schools they serve by assigning a specially selected and trained uniformed police officer to each middle and high school campus. The School Resource Officer Unit supervisor will determine scheduling, training related to the duties of the position, and assignments. The School Resource Officer (SRO) will perform in an enforcement and investigative capacity and will seek the cooperation of school administrators to the benefit of all within the school and community. The SRO will function as an advisor, mentor, and positive role model to students as well as provide an additional educational resource to the school.

Policy

The procedures and organizational aspects referred to in this agreement do not supersede any policies of the Charleston Police Department, specifically but not limited to, Administrative General Order 40 – Juvenile Operations, Administrative General Order 9 Responsibilities of

Administration and Administrative General Order 30- Authority to Exercise Alternatives to Arrest.

Objective

The SRO Unit involves the assignment of police officers from the Charleston Police Department to work directly in the high schools and middle schools within the city of Charleston. The purpose of these assignments is an effort to establish a partnership with school personnel, parents and students.

The goals of this partnership include the following:

1. Maintain a safe and secure environment on campus.
2. Prevent criminal activities and disturbances.
3. Promote positive attitudes regarding police functions.
4. Instill students with a sense of their rights and responsibilities as citizens.
5. Establish a positive working relationship with the school and surrounding community.
6. Prevent juvenile delinquency.

The SRO will attempt to prevent criminal offenses committed on school property by:

1. Patrolling the school campus in order to maintain a highly visible presence and deterrence to criminal activity.
2. Investigating crimes that occur within the school and on school property.
3. Conferring with the principal to develop plans and strategies to prevent and/or minimize dangerous situations on or near the campus.
4. Developing positive relationships with students and staff.
5. Supporting or implementing outreach programs both in school and after school.
6. Participate in safety drills such as fire, Code Yellow/Red as scheduled by school administrators.

SRO Duties and Responsibilities

Understanding that juvenile behavioral issues are best handled by school administrators, the SRO will not act as a school disciplinarian. The SRO will not enforce or investigate violations of school rules or policies or become involved with matters that are strictly school discipline issues.

Specific duties and responsibilities of the SRO include, but are not limited to:

LAW ENFORCEMENT OFFICER

1. The primary duty of the SRO is to ensure a safe and crime free learning environment in schools.

2. The SRO will act to prevent an active shooter and in the event of an active shooter to respond and stop the threat to the students, faculty and visitors.
3. The SRO will work with students, teachers and school administrators to identify and address problems that make students feel unsafe on the school campus.
4. The SRO will remain on their assigned school campus from school opening until school closing unless otherwise directed by the Charleston Police Department.
5. The SRO will initiate investigations of violations of criminal laws occurring on school property or involving school personnel or students.
6. The SRO will be responsible for obtaining off-duty officers to work school related functions such as athletic events. In this role, the SRO will coordinate and confer with appropriate school staff regarding security plans for these events as needed.
7. The SRO will notify the school administration of any emergency police action or threat that occurs on or near campus.
8. The SRO will act as a liaison between the school and the police department for school related issues as it pertains to information sharing as permitted by state and federal law.
9. The SRO will work with school administrators to develop a safety plan that addresses critical incidents as well as minor school incidents requiring additional police response.
10. The SRO will prevent and reduce the occurrence of criminal activity on school property by establishing a highly visible police presence.
11. The SRO will take law enforcement actions as required against intruders and unwanted guests who may appear at school and school related functions to the extent that the SRO may do so under authority of the law.
12. In the event that the SRO becomes aware of a threat to their school, students or school staff members the SRO must immediately notify the SRO Sergeant.
13. The SRO will work with administrators and school district security officials to review campus security measures, such as security cameras, entry procedures, and fire/lockdown drills.

INFORMAL COUNSELOR

1. The Charleston Police Department is committed to diverting youth from the criminal justice system when appropriate; therefore, SROs will consider alternatives to arrest by referring youth to various service providers. (Examples of appropriate alternatives include but are not limited to; Mobile Crisis, Department of Social Services or existing in-school programs or counselling programs).
2. The SRO will attempt to resolve any problems between the school and the surrounding residential or business communities so that the schools will maintain a viable relationship with the surrounding community.
3. The SRO will promote youth based crime prevention programs such as, but not limited to; Camp Hope and the Charleston Police Explorers.
4. The SRO will pursue improved cooperation among the schools, communities, students, parents, other agencies and the police.
5. SROs will provide individual mentorship to students when appropriate.
6. The SRO will identify students by direct contact or information from school personnel who need or may need the assistance of other social services.
7. The SRO will encourage individual and small group discussions with students, based upon materials covered in class, to further establish rapport with the students.

8. When requested by the Principal, the SRO shall attend parent and faculty meetings to solicit support and understanding of the SRO program.
9. The SRO will make themselves available for conferences with students, parents and faculty members in order to assist them with problems of a law enforcement or crime prevention nature.
10. The SRO will become familiar with all eommunity agencies which offer assistance to youth and their families, such as mental health clinics, drug assistance centers...etc. The SRO will make referrals to such agencies when necessary thereby acting as a resource person to students, parents, faculty and staff.
11. The SRO will act to de-escalate potential conflicts among students in an attempt to prevent issues positively before they escalate into criminal activity such as assaults or harassment.

EDUCATOR

1. The SRO will act as an instructor for specialized short term programs at all schools when approved to do so by the Principal or a member of the faculty.
2. The SRO will coordinate all of their activities and programs with the Principal and staff members concerned and will seek advice and guidance prior to enactment.
3. The SRO will develop expertise in presenting various law related subjects to students.
4. The SRO will explain the role of law enforcement in society by participating in lectures, displays and special events.
5. The SRO will serve as a law related educator and will be available to teach law related topics when possible. This function is secondary to the SRO's primary duty as law enforcement officer.
6. The SRO will serve as a law related advisor and a resource for students, parents and school staff regarding criminal justice issues.

<u>Supervision: SRO Sergeant Duties and Responsibilities</u>

Specific duties and responsibilities of the SRO Sergeant include, but are not limited to:

1. The SRO Sergeant will act as a liaison between the Charleston Police Department and the schools and school districts it serves.
2. The SRO Sergeant will be responsible for the daily supervision of the SROs assigned to the SRO Unit.
3. The SRO Sergeant will be responsible for the scheduling, training and assignment of the SROs assigned to the SRO Unit.
4. The SRO Sergeant will be responsible for the collecting, maintaining and disseminating (as directed), data as it pertains to juvenile arrests and criminal activity reported at respective schools.
5. The SRO Sergeant will be responsible for the approval of all arrests made by SROs as it

relates to their duties as SROs. This is to ensure that all department policies and guidelines are being followed and that the law is being applied consistently at all schools.

6. The SRO Sergeant will immediately notify the Team Commander, Division Commander, Deputy Chief and Chief of Police of any arrest made on school grounds via email.
7. The SRO Sergeant will immediately notify the Team Commander, Central Investigations and the SSRT Sergeant of any potential threat to a school.

SRO Selection and Training

SROs will be selected pursuant Charleston Police Department Administrative General Order 9 – Responsibilities of Administration, subsection 9.7.

ELIGIBILITY

1. An officer must be released for independent duty.
2. Express a desire to participate in the SRO Unit.
3. Have a minimum of meets expectations rating on their most recent annual evaluation.
4. Receive a favorable recommendation from their supervisor.
5. There will be a review of the applicant's personnel file, evaluations and Professional Standards record.

SELECTION PROCESS

The division commander or their designee will make a vacancy announcement at least 15 days prior to the start of the selection process. The selection process will include at a minimum an oral interview panel. The oral interview panel will include three to five evaluators. These evaluators will include the Team Commander, one or more members of the unit, a command level personnel from outside of the Team and/or a City of Charleston employee from a department that has a working relationship with the Charleston Police Department.

SRO TRAINING

All SROs must attend the SRO Course at the South Carolina Criminal Justice Academy within one year of permanent transfer into the unit. Additional training will be the responsibility of the individual SROs.

Threats to Schools

In the event that an SRO receives information of a potential threat to their school, a student or staff member the SRO will do the following:

1. Notify the SRO Sergeant and begin gathering all pertinent information in regards to the parties involved.
2. The SRO will be responsible for completing the incident report for the situation.
3. The SRO Sergeant will notify the Team Commander, Central Investigations and the SSRT Sergeant of the situation.

Central Investigations, once notified will respond and be responsible for conducting any follow

up investigations. CID responds under these circumstances so that the incident can be investigated with the appropriate sense of urgency and consistency at all CPD staffed campuses. This will facilitate the proper documentation, charging of offenders (if applicable), or mitigation of fear if the incident is discovered to be a false threat or misunderstanding.

Searches, Seizures and Interviews

SEARCHES AND SEIZURES

1. The SRO will not conduct administrative searches.
2. Police searches of students and their property on school premises are generally subject to the same legal requirements for a search warrant and probable cause as other searches.
3. Exceptions to the search warrant requirement (e.g. consent to search, emergency situations) that apply to non-school searches also apply to school searches.
4. School officials may conduct searches of students and their property without a warrant but with reasonable suspicion.
5. Searches conducted by school officials upon the request of, or with the active participation of the police, require a search warrant.
6. Officers may only accompany school officials who are conducting a search without a search warrant, but may not participate with school officials in the search either directly or indirectly.
7. The SRO will only seize property as it relates to criminal activity.

INTERVIEWS

The interviewing of students is addressed in Charleston Police Department Administrative General Order 40:

Subsection 40.4 Juveniles on School Grounds

"Before any effort is made to question a student on school grounds, the officer will contact the school principal, or designee, and the assigned SRO. The officer will ask the principal to contact the student's parent or guardian, indicating that a police officer has requested to interview the student and gain the consent of the parent/guardian prior to the questioning.

1. If the parent/guardian requests that the questioning take place in his/her presence, the questioning will be delayed until the parent/guardian arrives.
2. If the parent/guardian denies permission for an interview at the school the student will not be called from class.

If the police officer receives permission for the interview a school staff member, rather than the police officer, will call the student from class to the school office. In the event that the officer believes they have not received proper cooperation from a school official the officer will report the situation to the officer's superior and to the proper school official."

SROs will not enlist school officials or employees to conduct interviews, inquires or similar fact finding activities regarding students as part of an investigation. School officials who act at the direction of or on behalf of the interests of the police constructively become police officers and in so doing must abide by the legal provisions pertaining to a police officer. Police officers are

not precluded from questioning school officials with regard to their knowledge of youths in their charge, their activities and similar matters.

Student Arrests

Under no circumstances will an SRO or any other officer with the Charleston Police Department charge a student with *Disturbing School* (SC Statute 16-17-420 or City Code 21-107)

Pursuant to CPD General Order 40, subsection 40.3 – Juvenile Investigations:

"Officers are required to utilize the least coercive methods available to accomplish the police mission during interactions with juveniles. Society grants police officers wide latitude and discretion regarding their decisions to invoke the formal arrest process. Factors to be weighed in determining whether to arrest, divert a juvenile from the criminal justice system through outright release, or other options as offered by the courts, department, or related agency are: seriousness of the crime, age and circumstances of the juvenile offender, offender's prior record (if any) and availability of local rehabilitation resources."

Additionally, SRO's will be cognizant that some types of student misbehavior may technically meet existing statutory requirements for non-violent misdemeanor offenses, however upon considering all factors involved, may be best handled outside of the Juvenile Criminal Justice System.

Additional guidance for these situations is located in CPD General Order 30: Authority to Exercise Alternatives to Arrest which states in section 30.1: "From time to time, by the nature of their employment, police officers may face situations where the interests of all concerned are best served by utilizing methods other than conventional arrests. Discretion is inherent to the police profession and may result in the officer applying a wide spectrum of incident reaction ranging from warnings to custodial arrest. The purpose of this directive is to provide some guidance as to when discretion is appropriate and when it is not."

SRO's will not be responsible for requests to resolve routine discipline problems involving students. The administration of student discipline, including student code of conduct violations and misbehavior is the responsibility of the school administrators unless the violations involve criminal conduct. Minor, non-violent behavioral violations will be resolved by school administration.

In the event that a student violates the law and an arrest is imminent the following procedure will be followed:

1. The SRO must immediately notify the SRO Sergeant of the situation.
2. The SRO Sergeant will make a determination if an arrest is appropriate based on the applicable laws of the state, codes of the city and policies and procedures of the department.
3. The SRO Sergeant will then notify the Team Commander, Division Commander, Deputy Chief and the Chief of Police of the incident via email.
4. When an arrest does occur the SRO will consider and comply with the recommendations of the Juvenile Detention Risk Assessment Instrument in determining the detention or

custodial release of juvenile offenders, unless it is overridden by a supervisor.

5. In the event of the arrest of an adult student the SRO will cite and release the student unless the arrest is for felony or serious misdemeanor.
6. In general, arrests/ charges of students will result in release to parents or guardians at the incident location unless the circumstances of the incident or criminal charge are significant in nature resulting in custodial detention.

Memorandum of Understanding

Memorandums of Understanding (MOU's) will be developed between the Charleston Police Department and each respective School District in which the CPD SRO's are assigned. MOU's will be established yearly and will include effective dates of the agreement. The MOU will clearly define the roles and responsibilities of the partners involved. All MOU's will be signed and dated by the City of Charleston Mayor and Chief of Police as well as the respective school district Superintendent or Charter School Principal.

CITY OF CHARLESTON

Witness

Luther Reynolds 7-23-20

Chief Luther Reynolds Date
City of Charleston Police Department

Witness

Mayor John J.Tecklenburg Date

BERKELEY COUNTY SCHOOL DISTRICT

Witness

Eddie Ingram, Ed.D. 7/13/2020 Date
Superintendent

Witness

COMMITTEE / COUNCIL AGENDA

9.)

TO: John J. Tecklenburg, Mayor

FROM: Luther Reynolds DEPT. CPD

SUBJECT: MEMORANDUM OF AGREEMENT BETWEEN CPD AND CCSD RE: SRO'S

REQUEST: APPROVAL OF MEMORANDUM OF AGREEMENT BETWEEN CPD AND CHARLESTON COUNTY SCHOOL DISTRICT REGARDING SRO'S FOR 2020-21 SCHOOL YEAR.

COMMITTEE OF COUNCIL: _____ DATE: _____

COORDINATION: This request has been coordinated with: *(attach all recommendations/reviews)*

	Yes	N/A	Signature of Individual Contacted	Attachment
Chief of Police	X		Luther Reynolds	X
Corporation Counsel	X			

FUNDING: Was funding previously approved? Yes ☐ No ☐ N/A ☐

If yes, provide the following: Dept./Div: _____ Account #:: _____

Balance in Account _____ Amount needed for this item _____

NEED: Identify any critical time constraint(s).

CFO's Signature: _____

FISCAL IMPACT:

Mayor's Signature: _____
John J. Tecklenburg, Mayor

ORIGINATING OFFICE PLEASE NOTE: A FULLY STAFFED/APPROVED (except Mayor's Signature) PACKAGE IS DUE IN THE CLERK OF COUNCIL'S OFFICE NO LATER THAN 10:00AM THE DAY OF THE CLERK'S AGENDA MEETING.

SCHOOL RESOURCE OFFICER PROGRAM: 2020-2021 SCHOOL YEAR
MEMORANDUM OF AGREEMENT
Between the Charleston County School District and the
City of Charleston Police Department

WHEREAS, School campuses are learning environments where public education students are prepared for success in college, careers, and citizenship.

WHEREAS, School resource officers are necessary to provide law enforcement and police services to assist in fostering a safe learning environment.

THEREFORE, this Memorandum of Agreement is made and entered into by and between the Charleston County School District (CCSD) and the City of Charleston Police Department (CPD) for the 2020-2021 school year.

SECTION 1: RIGHTS AND DUTIES OF THE CHIEF OF POLICE

The Chief of Police shall provide School Resource Officers (hereinafter referred to as "SRO") as follows for the 2020-2021 school year. The services of the SROs will commence on the first teacher workday of the school year and will continue through the last school day for students.

A. Number and Funding of School Resource Officers

The Chief of Police shall assign regularly employed police officer(s) to each of the following schools:

1 SRO	Buist Academy
1 SRO	Burke High
1 SRO	C.E. Williams Middle – North Campus
1 SRO	C.E. Williams Middle – South Campus
1 SRO	Charleston Progressive Academy
1 SRO	Haut Gap Middle
1 SRO	James Simons Montessori
1 SRO	Julian Mitchell Elementary
1 SRO	Memminger Elementary
1 SRO	Montessori Community School/Springfield Elementary
1 SRO	Sanders-Clyde Elementary
1 SRO	Simmons-Pinckney Middle
1 SRO	St. Andrew's School of Math and Science
1 SRO	St. John's High
2 SROs	West Ashley High

The officers at James Simons Montessori and Memminger Elementary will be funded in part through an allocation issued directly to CPD by the State of South Carolina. In FY21, the state allocation is $82,398.59 per position.

CCSD shall fund the remaining fourteen (14) officers at the rate of $37,699 per officer.

The Chief of Police shall assign a police supervisor to oversee the police officers assigned above and to perform scheduled and non-scheduled visits to the schools.

West Ashley Head Start shall be covered by off-duty officers, and payment will be issued directly to the off-duty officers by CCSD. The responsibilities of off-duty officers, who are not considered SROs for the purpose of this agreement, shall be governed by CPD policies and procedures and CCSD Office of Security and Emergency Management Special Order 2019-001.

SROs shall act in accordance with the policies and procedures of the Charleston Police Department to enforce state laws and municipal ordinances.

The Chief of Police or designee shall ensure the CCSD Office of Security and Emergency Management (OS&EM) possesses an up-to-date roster of SROs assigned to CCSD and the school in which they are primarily assigned. Any changes to SRO staffing should be reported to CCSD OS&EM as soon as practical.

The Chief of Police or designee shall provide a monthly report of calls for service and criminal incidents occurring within these schools to the Superintendent of Schools or designee. The report shall include trend data with a narrative explanation. The report should also contain a listing of school-related arrests or detentions that occurred during the month that includes the date of arrest/detention, individual's name, age, gender, race, charge(s), and school in which the charge originated.

The SRO assigned to the above schools will be permitted to travel to off-campus based school programs in the City of Charleston at the request of the Principal or the Assistant Principal and with the consent of the Chief of Police or designee.

At the discretion of the Chief of Police and the CCSD Director of Security and Emergency Management, additional SROs may be assigned to CCSD schools within the City of Charleston in cases of emergency or unusual circumstances in order to ensure the continued physical and psychological well-being of students. A record shall be kept by CCSD of the dates of such assignments and the circumstances warranting it.

B. Regular Duty Hours of School Resource Officers

Each school listed in this agreement shall have an SRO assigned on a full-time basis during the regular school year. The SRO will be assigned to the school eight (8) hours per school day; however, a SRO may be called upon to leave the assigned school when he/she is needed at another school to handle a call for service or other criminal incident. The supervisor may temporarily reassign any SRO during school holidays and vacations during the school year or during a period of a public safety emergency. Availability of a SRO during the summer months is at the discretion of the Chief of Police or designee and shall be the subject of a separate agreement.

C. Duties of the School Resource Officer

SROs are expected to adhere to the guidelines set forth in the Charleston Police Department's SRO Field Guide. A copy of this document will be provided to CCSD.

As sworn law enforcement officials, SROs have a major role in campus security. SROs shall not only be called to respond to criminal incidents, but also to assist in emergency crisis planning, building security, and training school personnel on handling crisis situations. It is important for school administrators to establish and maintain close partnerships with SROs as they are valuable resources for providing a safe school environment.

The SRO shall act in the capacity of a law enforcement officer and advisor.

SROs should be positive role models and may be used to promote the profession of law enforcement as a career choice for students. School administrators shall support positive interactions between SROs and students on school campuses.

The SRO shall act as an instructor for specialized short-term programs when approved to do so by the Principal or member of the faculty. The SRO will encourage individual and small group discussions with students based upon materials covered in class to further establish rapport with the students. The SRO shall develop expertise in presenting various law-related subjects to students. The SRO will submit the subject and the number of classes taught on the monthly activity report.

The SRO shall coordinate all of his/her activities and programs with the Principal and relevant staff members and will seek advice and guidance prior to implementation. The SRO shall, whenever possible, participate in school functions as they relate to the duties of the SRO. The SRO will keep the Principal informed of his/her Police Department obligations.

When requested by the Principal, the SRO shall attend parent and faculty meetings to solicit support and understanding of the SRO program.

The SRO shall make him/herself available for conferences with students, parents, and faculty members in order to assist them with problems of a law enforcement or crime prevention nature.

The SRO shall become familiar with all community agencies that offer assistance to youth and their families, such as mentoring agencies, mental health clinics, and drug assistance centers. The SRO shall serve as a resource to students, parents, faculty, and staff, and should make referrals to these agencies when necessary.

The SRO shall assist the Principal in developing plans and strategies to prevent or minimize dangerous situations.

Should it become necessary to conduct a formal police interview with students and/or faculty members, the SRO shall inform the Principal and/or designee and adhere to applicable law enforcement policies and legal requirements.

The SRO shall take law enforcement actions to the extent that the SRO may do so under the authority of law against intruders and unwanted guests who appear at the school and related school functions. As soon as practical, the SRO shall make the Principal aware of such action.

The SRO shall give assistance to other law enforcement officers in matters regarding his/her school assignment whenever necessary.

The SRO shall maintain detailed and accurate records of the School Resource Officer program on a monthly basis. These records should be compiled by the SRO supervisor and submitted to the Superintendent of Schools or designee.

The SRO shall not act as a school disciplinarian. The administration of school discipline is solely the responsibility of the appropriate school faculty and staff. SROs are not to be used for regularly assigned lunchroom duties, as hall monitors, or for other monitoring duties; however, SROs should provide guidance and/or assistance to the school administration when presented with a specific problem or concern.

If an incident is a violation of the law, the Principal will contact the SRO and/or the SRO supervisor immediately. The SRO will determine whether or not law enforcement action is appropriate.

In cases of contested expulsions, the SRO will provide case information or testimony to the Superintendent of Schools or designee. The SRO will also provide testimony at an expulsion hearing after being requested by the Superintendent of Schools or designee, unless such testimony could hinder a criminal investigation or prosecution.

D. Co-Curricular Activities and School Functions

Upon request from the Principal, and with the approval of the Chief of Police or designee, a SRO may accompany a school to events outside of the City of Charleston and within the State of South Carolina for the purposes of providing law enforcement services as authorized by S.C. Code § 5-7-12. Under no circumstances may the SRO in his/her official capacity accompany a school to events outside the State of South Carolina.

When the SRO works outside of the normal weekly school hours, which includes, but is not limited to, providing services for the events described in the above listed paragraph, the payment for the SRO shall be based on an hourly rate at time and a half as determined by Charleston Police Department policy in effect at the time of this agreement. Payment for these services shall be made directly to the City of Charleston. All overtime shall be approved in advance and in writing by the School District's Director of Security and Emergency Management. (NOTE: This paragraph does not apply to off-duty services provided to the School District by individual officers.)

SECTION 2: RIGHTS AND DUTIES OF THE SCHOOL DISTRICT

The School District shall provide each SRO with the facilities deemed necessary in the performance of the SRO's duties.

A. Materials and Facilities Provided by the School District

The School District will provide the SRO with access to an air-conditioned and properly lit private office. This office shall contain a telephone and school computer, which will be used for general business purposes. Only the SRO will have access to this office.

The School District will provide the SRO with a location for files and records that can be locked and secured within the office.

The School District will provide a desk with drawers, an office chair, and a filing cabinet.

In limited circumstances where the space available in a school building does not allow for the SRO to receive a private office, a mutually agreeable alternative will be sought.

SECTION 3: PROGRAM GOALS AND EVALUATION

The Charleston County School District requests the assistance of the Charleston Police Department in keeping its schools safe and orderly.

A. Program Goals

The Charleston Police Department, in conjunction with the Charleston County School District, shall develop program goals and objectives for the School Resource Officer program. These program goals shall be in line with the Charleston County School District's strategic plan related to a safe school climate.

The SRO shall be an active law enforcement official on campus, a law-related instructor, and an advisor and resource for faculty, staff, students, and parents.

The SRO shall be active in conferences, counseling, and community referrals.

B. Program Evaluation

Indicators of success shall be developed objectively and independently to measure how well goals and objectives were obtained.

The Charleston Police Department shall evaluate the effectiveness of the School Resource Officer program and report the SROs' activity to the Charleston County School District on a monthly basis.

SECTION 4: SELECTION, TRAINING, AND EMPLOYMENT STATUS OF SCHOOL RESOURCE OFFICER

The Charleston Police Department shall be responsible for the recruitment and employment of School Resource Officers. The Charleston Police Department and the Charleston County School District Office of Security and Emergency Management shall be responsible for interviewing and evaluating SROs and SRO candidates; recommendations may be made to the Chief of Police for the selection of SROs. The SRO shall serve within schools at the pleasure of the Chief of Police and Superintendent of Schools.

The Charleston Police Department and Charleston County School District recognize the need to have highly trained and qualified individuals serving as SROs. The law enforcement agency shall ensure that each SRO has the skills and training needed to be successful in a school environment. Each SRO should complete School Resource Officer training through the South Carolina Criminal Justice Academy or National Association of School Resource Officers as soon as practical. Additionally, SROs assigned to CCSD at the beginning of the school year shall attend the beginning-of-year training hosted by CCSD in the month of August.

If a SRO is unable to attend the August training due to public safety commitments, or if a SRO begins their service with CCSD after the class has been held, key information presented during the training related to district emergency management procedures, special education laws, de-escalation techniques, and other covered topics will be made available to the SRO and reviewed by him/her as soon as practical. Certification that the information has been reviewed shall be submitted to the CCSD Office of Security and Emergency Management.

SECTION 5: REASSIGNMENT, RESIGNATION, OR DISMISSAL OF SCHOOL RESOURCE OFFICERS

It is in the best interest of the Charleston Police Department and Charleston County School District that highly qualified and skilled police officers serve as School Resource Officers.

A. Principal's Request for the Removal of an SRO

In the event the Principal of the school to which an SRO is assigned feels that the SRO is not effectively performing his/her duties, the Principal shall state these reasons in writing to the School District's Director of Security and Emergency Management. Within a reasonable time after receiving the written recommendation from the Principal, the Director of Security and Emergency Management or designee shall advise the Chief of Police or designee of the Principal's concerns.

If the Chief of Police desires, the Superintendent and the Chief of Police, or their designees, shall meet with the SRO and the Principal in an attempt to mediate and resolve any concerns.

If, within a reasonable amount of time after commencement of such mediation, the problem cannot be resolved, or in the event mediation is not sought by the Chief of Police, the SRO shall be reassigned from the program at the school, and a replacement shall be obtained.

B. SRO's Adherence to Department Rules

The Chief of Police may dismiss or reassign a SRO based upon the department's rules, regulations, and/or general orders, and when in the best interest of the citizens of Charleston County and the City of Charleston.

C. Assignment of a Replacement SRO

In the event of the resignation, dismissal, or reassignment of a SRO, or in the case of absences by a SRO, the Chief of Police shall provide a temporary replacement for the SRO within five (5) business days. A permanent replacement will be assigned within 30 school days of receiving notice of such absence, dismissal, or resignation.

SECTION 6: FAMILY EDUCATIONAL RIGHTS AND PRIVACY ACT

The School Resource Officers of the Charleston Police Department shall act as the law enforcement unit for the Charleston County School District with regard to the information sharing provisions of the Federal Educational Rights and Privacy Act (FERPA). Records produced by the SRO for the purpose of law enforcement are exempt from the provisions of FERPA.

The school may furnish educational records to the SRO under appropriate circumstances; however, those records and personally identifiable information contained therein do not lose their status as educational records and remain subject to FERPA, including the disclosure provisions, while in the possession of the law enforcement unit. This should not be interpreted to be a blanket exception.

SECTION 7: REQUEST FOR CANINE SEARCHES

A Principal can request canine search assistance from the Charleston Police Department with the approval of his/her supervisor (i.e., Executive Director or Associate Superintendent) and the CCSD Office of Security and Emergency Management. School district and police department policies and procedures must be followed during any canine searches.

SCHOOL RESOURCE OFFICER PROGRAM: 2020-2021 SCHOOL YEAR
MEMORANDUM OF AGREEMENT
Between the Charleston County School District and the
City of Charleston Police Department

SECTION 8: GOOD FAITH AND MODIFICATION

The Charleston County School District, the Charleston Police Department, their agents, and employees agree to cooperate in good faith in fulfilling the terms of this agreement. Unforeseen difficulties or questions will be resolved by negotiation between the Superintendent and the Chief of Police or their designees. The terms of this agreement are subject to change at the end of each school year. Any recommended changes or modifications to the agreement shall be submitted in writing.

This document constitutes the full understanding of the parties, and no terms, conditions, understandings, or agreements meant to modify or vary the terms of this document shall be binding unless hereafter made in writing and signed by both parties.

Acting on behalf of the Charleston County School District and the Charleston Police Department, this agreement is signed and sealed by:

FOR THE CHARLESTON COUNTY SCHOOL DISTRICT:

_____
Gerrita Postlewait
Superintendent of Schools

_____
Date of Signature

_____
Michael Reidenbach
Director of Security and
Emergency Management

_____
Date of Signature

FOR THE CITY OF CHARLESTON:

_____
John Tecklenburg
Mayor

_____
Date of Signature

Luther Reynolds
Luther Reynolds
Chief of Police

8-28-20
Date of Signature

COMMITTEE / COUNCIL AGENDA

10.)

TO: John J. Tecklenburg, Mayor

FROM: Luther Reynolds DEPT. CPD

SUBJECT: MEMORANDUM OF AGREEMENT BETWEEN CPD AND JICHS RE: SRO'S

REQUEST: APPROVAL OF MEMORANDUM OF AGREEMENT BETWEEN CPD AND JAMES ISLAND CHARTER HIGH SCHOOL REGARDING SRO'S FOR 2020-21 SCHOOL YEAR.

COMMITTEE OF COUNCIL: _____ DATE: _____

COORDINATION: This request has been coordinated with: *(attach all recommendations/reviews)*

	Yes	N/A	Signature of Individual Contacted	Attachment
Chief of Police	X		Luther Reynolds	X
Corporation Counsel	X			

FUNDING: Was funding previously approved? Yes ☐ No ☐ N/A ☐

If yes, provide the following: Dept./Div: _____ Account #:: _____

Balance in Account _____ Amount needed for this item _____

NEED: Identify any critical time constraint(s).

CFO's Signature: _____

FISCAL IMPACT:

Mayor's Signature: _____
John J. Tecklenburg, Mayor

ORIGINATING OFFICE PLEASE NOTE: A FULLY STAFFED/APPROVED (except Mayor's Signature) PACKAGE IS DUE IN THE CLERK OF COUNCIL'S OFFICE NO LATER THAN 10:00AM THE DAY OF THE CLERK'S AGENDA MEETING.

AGREEMENT BETWEEN

The James Island Charter High School
And
City of Charleston Police Department
For
The School Resource Officer Program, 2020-2021 School Year

I. Purpose and Objective of Agreement

A. Purpose: The School Resource Officer (SRO) will facilitate the development of positive relationships by instilling an atmosphere of approachability, mutual respect, and trust within the school to which the officer is assigned. This is done to create safe and secure school environment while developing and maintaining a successful working relationship/partnership between police, school administrators, staff, parents and students. The SRO will perform in an enforcement and investigative capacity and will seek the cooperation of school administrators to the benefit of all within the school and community. The SRO will also function as an advisor, mentor and positive role model to students as well as provide an additional educational resource to the school.

B. Objectives:

1) Maintain a safe and secure environment on campus.

2) Prevent criminal activities and disturbances.

3) Promote positive attitudes regarding police functions;

4) Instill students with a sense of their rights and responsibilities as citizens.

5) Establish a positive working relationship/partnership with the school and surrounding community.

6) Prevent juvenile delinquency.

C. Ways of achieving these objectives include, but are not limited to:

1) Patrolling the school campus in order to maintain a highly visible presence and deterrence to criminal activity;

2) Investigating crimes that occur within the school and on school property;

3) Conferring with the principal to develop plans and strategies to prevent and/or minimize dangerous situations on or near the campus;

4) Developing positive relationships with students and staff;

5) Supporting or implementing outreach programs both in school and after school;

6) Participating in safety drills such as fire and Code Yellow/Red as scheduled by school administrators.

II. Rights and Duties of the Charleston Police Deparment

The Chief of Police shall provide one (1) School Resource Officer (hereinafter referred to as "SRO") to James Island Charter High School (JICHS) as follows for the 2020-2021 School year:

A. Number and funding of SRO:

1. The Chief of Police shall assign one (1) regularly employed police officer to James Island Charter High School.

JICHS shall fund one (1) police officer at the rate of $37,699 for the term of this agreement

2. The Chief of Police shall assign the respective team commander or his designee during the regular school year to oversee the police officer assigned above and to perform scheduled or non-scheduled visits to the high school.

3. The Chief of Police shall provide a monthly report of calls for service and criminal incidents to the Principal. The report shall include trend data with a narrative explanation.

B. Regular Duty Hours of SRO:

1. An SRO shall be assigned on a full-time basis during the regular school year of eight (8) hours a day. (Note: An SRO may be called upon to leave the assigned school when he or she is needed at another school for a call for service to handle a criminal incident.) The Supervisor may temporarily reassign any SRO during school holidays and vacations during the school year or during the period of law enforcement emergencies. Availability of

an SRO during the summer months is at the discretion of the Chief of Police or his designee, and shall be the subject of a separate agreement.

2. The SRO assigned to the above schools will be permitted to travel to off-campus based programs in the City of Charleston that are a part of the school at the request of the Principal or the Assistant Principal and with the consent of the Chief of Police or his designee for educational purposes and emergencies.

C. Duties of SRO:

1. Understanding that juvenile behavioral issues are best handled by school administrators, the SRO will not act as a school disciplinarian.

a. SROs are not to be used for regularly assigned lunchroom duties, as hall monitors, or for other monitoring duties.

b. The SRO will not enforce or investigate violations of school rules or policies or become involved with matters that are strictly school discipline issues.

c. If an incident is a violation of the law, the Principal shall contact the SRO and his/her supervisor immediately. The SRO shall then determine whether law enforcement action is appropriate.

d. In cases of contested expulsions, the SRO will provide case information or testimony to the Principal or his/her designee, and upon the request of the Principal or his/her designee, testimony at the hearing, unless such testimony could hinder a criminal prosecution.

2. Duties as Law Enforcement Officer:

a. The primary duty of the SRO is to ensure a safe and crime free learning environment in schools.

b. The SRO will prevent and reduce the occurrence of criminal activity on school property by establishing a highly visible police presence.

c. The SRO will remain on their assigned school campus from school opening until school closing unless otherwise directed by the Charleston Police Department.

d. The SRO will initiate investigations of violations of criminal laws occurring on school property or involving school personnel or students.

e. The SRO will work with students, teachers and school administrators to identify and address problems that make students feel unsafe on the school campus.

f. The SRO will act to de-escalate potential conflicts among students in an attempt to prevent issues positively before they escalate into criminal activity such as assaults or harassment.

g. The SRO will take law enforcement actions as required against intruders and unwanted guests who may appear at school and school related functions to the extent that the SRO may do so under authority of the law. As soon as practical, the SRO shall make the Principal aware of such action.

h. The SRO will work with administrators and school district security officials to review campus security measures, such as security cameras, entry procedures, and fire/lockdown drills.

i. The SRO will act as a liaison between the school and the police department for school related issues as it pertains to information sharing as permitted by state and federal law.

j. The SRO shall give assistance to other police officers and deputies in matters regarding his/her school assignment whenever necessary. The SRO shall, whenever possible, participate in school functions as they relate to the duties of the SRO.

k. The SRO shall maintain detailed and accurate records of the School Resource Officer Program on a monthly basis and shall forward same to the SRO supervisor who will forward copies to the Principal or his/her designee.

3. Duties as an Informal Counselor

a. The Charleston Police Department is committed to diverting youth from the criminal justice system when appropriate; therefore, SROs will consider alternatives to arrest by referring youth to various service providers. (Examples of appropriate alternatives include but are not limited to; Mobile Crisis, Department of Social Services or existing in-school programs or counselling programs).

b. The SRO will become familiar with all community agencies which offer assistance to youth and their families, such as mental health clinics, drug assistance centers...etc. The SRO will make referrals to such agencies when necessary thereby acting as a resource person to students, parents, faculty and staff.

c. The SRO will identify students by direct contact or information from school personnel who need or may need the assistance of other social services.

e. The SRO will promote youth based crime prevention programs such as, but not limited to; Camp Hope and the Charleston Police Explorers.

f. SROs will provide individual mentorship to students when appropriate.

g. The SRO will make themselves available for conferences with students, parents and faculty members in order to assist them with problems of a law enforcement or crime prevention nature.

h. When requested by the Principal, the SRO shall attend parent and faculty meetings to solicit support and understanding of the SRO program.

i. The SRO will pursue improved cooperation among the schools, communities, students, parents, other agencies and the police.

j. The SRO will attempt to resolve any problems between the school and the surrounding residential or business communities so

that the schools will maintain a viable relationship with the surrounding community.

4. Duties as an Educator. The SRO will serve as a law related advisor and a resource for students, parents and school staff regarding criminal justice issues.

a. The SRO will serve as a law related educator and will be available to teach law related topics when possible. This function is secondary to the SRO's primary duty as law enforcement officer.

b. The SRO will develop expertise in presenting various law related subjects to students, including but not limited to Public Safety classes.

c. The SRO will explain the role of law enforcement in society by participating in lectures, displays and special events.

d. The SRO will act as an instructor for specialized short term programs at all schools when approved to do so by the Principal or a member of the faculty.

e. The SRO will encourage individual and small group discussions with students, based upon materials covered in class, to further establish rapport with the students.

f. The SRO will coordinate all of their activities and programs with the Principal and staff members concerned and will seek advice and guidance prior to enactment.

g. The SRO will submit the subject and number of classes taught on the monthly report. This information will be kept for review by the school and the City of Charleston Police Department.

5. Co-curricular activities, events and school functions.

a. Upon request of the Principal or his/her designee, and approval of the Chief of Police or his designee, an SRO may accompany his/her school to events outside of the City of Charleston and within the State of South Carolina for purposes of providing law enforcement services as authorized by state law. See. S.C. Code (Ann.) Sec. 5-7-12. Under no circumstances may the SRO in his or her official capacity, accompany his/her school to events outside the state of South Carolina.

b. When the SRO works outside of the normal weekly school hours, which includes but it not limited to providing services for the events described in paragraph a. above, the payment for the SRO shall be based on an hourly rate, at time and a half, determined by Charleston City Police Department Policy, and in effect upon execution of this agreement. Payment for these services shall be made directly to the City of Charleston. All overtime shall be approved in advance and in writing by the Principal or his/her designee. (This sub-section does not apply to off-duty services that may be provided by individual officers.)

c. The SRO will be responsible for obtaining off-duty officers to work school related functions such as athletic events. In this role, the SRO will coordinate and confer with appropriate school staff regarding security plans for these events as needed.

D. Threats in Schools.

1. The SRO will work with school administrators to develop a safety plan that addresses critical incidents as well as minor school incidents requiring additional police response.

2. The SRO will act to prevent an active shooter and in the event of an active shooter to respond and stop the threat to students, faculty and visitors.

3. In the event that an SRO receives information of a potential threat to their school, a student or staff member the SRO will notify the SRO's Sergeant and school administration.

E. Searches, Seizures and Interviews

1. Searches and Seizures

a. The SRO will not conduct administrative searches.

b. Police searches of students and their property on school premises are generally subject to the same legal requirements for a search warrant and probable cause as other searches.

c. Exceptions to the search warrant requirement (e.g. consent to search, emergency situations, ect.) that apply to non-school searches also apply to school searches.

d. School officials may conduct searches of students and their property without a warrant based upon reasonable suspicion.

e. Searches conducted with the active participation of the police upon request of school officials require a search warrant.

f. Officers may only accompany school officials who are conducting a search without a search warrant, but may not participate with school officials in the search either directly or indirectly.

g. The SRO will only seize property as it relates to criminal activity.

2. Interviews

a. Before any effort is made to question a minor student on school grounds, the officer will contact the school principal, or designee, and the assigned SRO if different than the officer seeking to question the student. The SRO or officer will ask the principal to contact the student's parent or guardian, indicating that a police officer has requested to interview the student to gain the consent of the parent/guardian prior to questioning.

1. If the parent/guardian requests that the questioning take place in his/her presence, the questioning will be delayed until the parent/guardian arrives.

2. If the parent/guardian denies permission for an interview at the school the student will not be called from class.

b. If the SRO or officer receives permission for the interview a school or staff member, rather than the police officer, will call the student from class to the school office. In the event that the SRO or officer believes they have not received proper cooperation from a school official the officer will report the situation to the officer's supervisor and to the proper school official.

c. SRO's and officers shall not enlist school officials or employees to conduct interviews, inquiries or similar fact finding activities regarding students as part of an investigation. Police officers are not precluded from questioning school officials with regard to their knowledge of youths in their charge, their activities and similar matters.

F. Student Arrests

1. Under no circumstances will an SRO or any other officer with the Charleston Police Department charge a student with Disturbing Schools (SC Code 16-17-420 or City of Charleston Municipal Code 21-107)

2. Officers are required to utilize the least coercive methods available to accomplish the police mission during interactions with juveniles. Society grants police officers wide latitude and discretion regarding their decisions to invoke the formal arrest process. Factors to be weighed in determining whether to arrest, divert a juvenile from the criminal justice system through outright release, or other options as offered by the courts, department, or related agency are: seriousness of the crime, age and circumstances of the juvenile offender, offender's prior record (if any) and availability of local rehabilitation resources."

3. Additionally, SRO's will be cognizant that some types of student misbehavior may technically meet existing statutory requirements for non-violent misdemeanor offenses, however upon considering all factors involved, may be best handled outside of the Juvenile Criminal Justice System.

4. From time to time, by the nature of their employment, police officers may face situations where the interests of all concerned are best served by utilizing methods other than conventional arrests. Discretion is inherent to the police profession and may result in the officer applying a wide spectrum of incident reaction ranging from warnings to custodial arrest. The purpose of this directive is to provide some guidance as to when discretion is appropriate and when it is not.

5. SRO's will not be responsible for requests to resolve routine discipline problems involving students. The administration of student discipline, including student code of conduct violations and misbehavior is the responsibility of the school administrators unless the violations involve criminal conduct. Minor, non-violent behavioral violations will be resolved by school administration.

6. In the event that a student violates the law and an arrest is imminent the following procedure will be followed:

a. The SRO must immediately notify the SRO Sergeant of the situation.

b. The SRO Sergeant will make a determination if an arrest is appropriate based on the applicable laws of the state, codes of the city and policies and procedures of the department.

c. The SRO Sergeant will then notify the Team Commander, Division Commander, Deputy Chief and the Chief of Police of the incident via email.

d. When an arrest does occur the SRO will consider and comply with the recommendations of the Juvenile Detention Risk Assessment Instrument in determining the detention or custodial release of juvenile offenders, unless it is overridden by a supervisor.

e. In the event of the arrest of an adult student the SRO will cite and release the student unless the arrest is for felony or serious misdemeanor.

f. In general, arrests/ charges of students will result in release to parents or guardians at the incident location unless the circumstances of the incident or criminal charge are significant in nature resulting in custodial detention.

II. Program Goals and Evaluation

The JICHS see the assistance of the City of Charleston Police Department in keeping our schools safe and orderly.

The Charleston City Police Department in conjunction with the JICHS shall develop program goals and objectives for the School Resource Officer Program. These program goals shall be in line with the JICHS's action plan for a safe school climate. This means that the SRO will be an active law enforcement official on campus, a classroom instructor and a resource for teachers, students and parents. The SRO shall also be active in conferences, counseling and referrals. Indicators of success shall be developed objectively and independently to measure how well goals and objectives were obtained.

The Charleston City Police Department shall evaluate the effectiveness of the School Resource Officer Program and report monthly to the JICHS on the SROs activities.

III. Rights and Duties of the School District

JICHS shall provide the SRO with the following materials and facilities, which are deemed necessary to the performance of the SRO's duties.

A. Access to an air-conditioned and properly lit private office. This office shall contain a telephone along with a school computer, which will be used for general business purposes. Only the SRO will have access to this office.

B. A location for files and records, which can be properly locked and secured within the office.

C. A desk with drawers, an office chair, and filing cabinet.

IV. Employment Status of School Resource Officer

The Charleston City Police Department shall be responsible for the recruiting of SRO. The Charleston City Police Department and the JICHS shall be responsible for interviewing and evaluating SROs and making recommendations to the Chief of Police for hiring. The SROs shall serve at the pleasure of the Chief of Police and the Principal, respectfully.

V. Reassignment, Resignation or Dismissal of School Resource Officers

A. In the event the Principal believes that the particular SRO is not effectively performing his/her duties and responsibilities, the Principal shall state these reasons in writing and shall advise the Chief of Police or his designee of the Principal's concerns. If the Chief of Police desires, the Principal and the Chief of Police or their designees, shall meet with the SRO and the Principal to mediate and resolve any problems. If, within a reasonable amount of time after commencement of such mediation, the problem cannot be resolved or mediated, or in the event mediation is not sought by the Chief of Police, the SRO shall be reassigned from the program at the school and replacement shall be obtained.

B. The Chief of Police may dismiss or reassign an SRO based upon the department's rules, regulations and/or General Orders and when in the best interest of the citizens of Charleston County and the Charleston City Police Department.

C. In the event of the resignation, dismissal or reassignment of an SRO, or in case of absences by an SRO, the Chief of Police shall provide a temporary replacement for the SRO as soon as possible within five (5) working days, and within thirty (30) school days of receiving such notice of such absence, dismissal or resignation; a replacement will be assigned.

VI. FERPA

The SROs of the Charleston City Police Department shall act as the Law Enforcement Unit for the JICHS with regards to information sharing as it related to the Family Educational Rights and Privacy Act (FERPA)

VII. K-9

The Principal can request K-9 search assistance from the Charleston City Police Department. Policy and approved procedures of the JICHS and the Charleston Police Department must be followed in the event s earch assistance is requested.

VIII. Good Faith

The JICHS, the Chief of Police, their agents and employees, agree to cooperate in good faith in fulfilling the terms of the agreement. Unforeseen difficulties or questions will be resolved by negotiation between the Principal and the Chief of Police or their designees. The terms of this agreement are subject to change at the end of each school year. Any recommended changes or modifications to the agreement shall be submitted in writing.

IX. Modification

This document constitutes the full understanding of the parties and no terms, conditions, understandings or agreements meant to modify or vary the terms of this document shall be binding unless hereafter made in writing and signed by both parties.

The services of the School Resource Officers will commence on the first day of teachers in-service of the new school year and will continue through the last day of school. This agreement shall be valid for the 2020-2021 school year.

Signed by:

FOR THE JAMES ISLAND CHARTER HIGH SCHOOL:

_____
Timothy Thorn
Principal

Dated:_____

FOR THE CITY OF CHARLESTON:

_____
John J. Tecklenburg
Mayor

Dated:_____

Luther Reynolds
Luther Reynolds, Chief
City of Charleston Police Department

Dated: 8-28-20

11.)

COMMITTEE / COUNCIL AGENDA

TO: John J. Tecklenburg, Mayor

FROM: Chief Luther Reynolds **DEPT.** Police Department

SUBJECT: 2020-2021 ERNEST KENNEDY ALCOHOL ENFORCEMENT GRANT AWARD

REQUEST: Approval to accept an award of $3,000 from the Ernest Kennedy Center for field intelligence training and alcohol enforcement

COMMITTEE OF COUNCIL: Ways & Means **DATE:** September 8, 2020

COORDINATION: This request has been coordinated with: *(attach all recommendations/reviews)*

	Yes	N/A	Signature of Individual Contacted	Attachment
Corporate Counsel	☐	☐		☐
Cap. Proj. Cmte. Chair	☐	☐		☐
Chief of Police	X	☐	Deputy Chief C Walker	☐ - For Chief Reynolds
Grants Coordinator	X	☐	Chelsea Taylor	☐

FUNDING: Was funding previously approved? Yes ☐ No X N/A ☐

If yes, provide the following: Dept./Div.: _____ Account #: _____

Balance in Account _____ Amount needed for this item _____

Does this document need to be recorded at the RMC's Office? Yes ☐ No X

NEED: Identify any critical time constraint(s).

CFO's Signature: _____

FISCAL IMPACT: There is no match required for this grant.

Mayor's Signature: _____ John J. Tecklenburg, Mayor

ORIGINATING OFFICE PLEASE NOTE: A FULLY STAFFED/APPROVED (except Mayor's Signature) PACKAGE IS DUE IN THE CLERK OF COUNCIL'S OFFICE NO LATER THAN 10:00AM THE DAY OF THE CLERK'S AGENDA MEETING.

John J. Tecklenburg
Mayor

City of Charleston
South Carolina

Luther Reynolds
Chief of Police

POLICE DEPARTMENT

MEMORANDUM

TO: Mayor Tecklenburg
City Councilmembers

FROM: Luther Reynolds, Chief of Police

SUBJECT: Ernest Kennedy Center Alcohol Enforcement Subgrant

DATE: August 31, 2020

The purpose of this memorandum is to request approval to accept the 2020-2021 Ernest Kennedy Center Alcohol Enforcement grant award of $3,000. There is no match required for this grant award. The grant funding will be used to support alcohol enforcement training and outreach programs to combat the issue of underage drinking in Charleston.

Funding is sourced from the South Carolina Department of Alcohol and Other Drug Abuse Services and is made available through the creation and support of Alcohol Enforcement Teams (AETs) in each judicial circuit. The AETs are to implement evidence-based environmental strategies to reduce underage alcohol use and its harmful consequences coupled with an active public education and prevention strategy. Enforcement of existing laws to restrict use and access by youth is one of our most powerful tools in prevention, and prevention agency/law enforcement partnerships can lead to some of the most powerful and sustainable outcomes.

In addition to the approval of grant award, the program also requires a renewal of an existing contract between the Charleston Police Department and the Berkeley/Charleston County AET.

180 LOCKWOOD BLVD., CHARLESTON, SOUTH CAROLINA 29403 • PHONE (843) 577-7434• FAX (843) 579-7518

The purpose of the contract is to formalize the collaboration between the three agencies in conducting environmental strategies related to alcohol and drug enforcement.

Should you have any questions regarding this grant program, please contact Chelsea Taylor, grants coordinator at taylorch@charleston-sc.gov for more information.

12.)

COMMITTEE / COUNCIL AGENDA

TO: John J. Tecklenburg, Mayor

FROM: Chief Luther Reynolds **DEPT.** Police Department

SUBJECT: NCPCV LAW ENFORCEMENT HEALTH & WELLNESS SPONSORSHIP

REQUEST: Approval to submit a request for sponsorship to the Motorola Solution Foundation for the Lighthouse Health & Wellness custom mobile App Through the National Center for Prevention of Community Violence

COMMITTEE OF COUNCIL: Ways & Means **DATE:** September 8, 2020

COORDINATION: This request has been coordinated with: *(attach all recommendations/reviews)*

	Yes	N/A	Signature of Individual Contacted	Attachment
Corporate Counsel	☐	☐		☐
Cap. Proj. Cmte. Chair	☐	☐		☐
Chief of Police	X	☐	Deputy Chief C. Walker	☐ - For Chief Reynolds
Grants Coordinator	X	☐	Nicholson Taylor	☐

FUNDING: Was funding previously approved? Yes ☐ No X N/A ☐

If yes, provide the following: Dept./Div.: _____ Account #: _____

Balance in Account _____ Amount needed for this item _____

Does this document need to be recorded at the RMC's Office? Yes ☐ No X

NEED: Identify any critical time constraint(s).

This sponsorship request is due September 1st. This is an after-the-fact approval request.

CFO's Signature: _____

FISCAL IMPACT: There is no match required for this sponsorship.

Mayor's Signature: _____ John J. Tecklenburg, Mayor

ORIGINATING OFFICE PLEASE NOTE: A FULLY STAFFED/APPROVED (except Mayor's Signature) PACKAGE IS DUE IN THE CLERK OF COUNCIL'S OFFICE NO LATER THAN 10:00AM THE DAY OF THE CLERK'S AGENDA MEETING.

National Center For Prevention of Community Violence
and **Lighthouse Health & Wellness** partner
to bring you mobile wellness solutions
generously sponsored by

MOTOROLA SOLUTIONS FOUNDATION

Law Enforcement Health & Wellness Scholarship Opportunity

What is the Lighthouse Health & Wellness Custom Mobile Application?

- **Private & Confidential** resource for officers and their families
- **Customizable Technology Solutions** that grows with your agency
- **24-hour Access** to critical wellness information & support
- **Peer Support Toolbox & Therapist Locator** at your fingertips

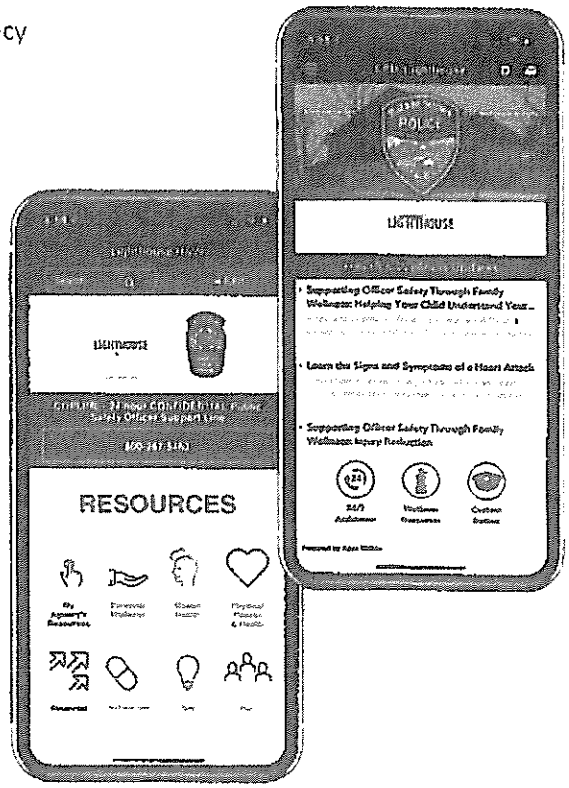

Click here to view more about LH H&W mobile application.

Is This Right for My Department?

Law enforcement across the nation suffer physical, emotional, and mental impacts from the job. Meeting the unique needs of officers and their families is a priority for many agencies. Budgets are stretched, often leaving wellness to compete with other vital needs. NCPCV scholarships provide public safety agencies a *no-cost* solution to meet the wellness needs of your personnel.

Scholarship Opportunity

With generous support from Motorola Solutions Foundation, NCPCV is offering scholarships for customized Lighthouse H&W mobile applications to 15 police agencies across the US!

Learn more at https://ncpcv.org/ac4p-policing-app/.

Apply Today!

Click here to apply. Deadline to complete the application is September 1, 2020.

The National Center for the Prevention of Community Violence is a nonprofit with extensive experience providing evidence based programming. NCPCV's AC4P Policing program uses an innovative approach to providing comprehensive, culturally competent training and tools to foster wellness among public safety. For more information visit www.ncpcv.org.

Lighthouse Health & Wellness is a public benefit corporation with the stated mission of ensuring that every public safety agency in the nation can provide its employees and their families with confidential and anonymous access to health and wellness resources. For more information, visit www.lighthousehw.org.

For more information or questions, email ivarody@ncpcv.org.

CPR COMMITTEE and/or COUNCIL AGENDA

TO: John J. Tecklenburg, Mayor

FROM: Matt Fountain / Andrew Jones **DEPT.** Stormwater Management

SUBJECT: 0318.19.067037 NATIONAL FISH AND WILDLIFE FOUNDATION (NFWF) GRANT ACCEPTANCE FOR JOHNS ISLAND RESTORATION PLAN TO IMPROVE FLOOD RESILIENCY

REQUEST: Approval to accept the National Fish and Wildlife Foundation (NFWF) Grant for Johns Island Restoration Plan to improve flood resiliency. The grant will develop a plan to reduce barriers to coastal resilience by producing a preliminary floodplain restoration planning framework that will integrate ecological function to increase the overall resilience of Johns Island's communities, fish and wildlife. Federal Funds-$117,500, Local Match-$117,500.

COMMITTEE OF COUNCIL: Ways & Means **DATE:** September 8, 2020

COORDINATION: This request has been coordinated with: *(attach all recommendations/reviews)*

	Yes	N/A	Signature of Individual Contacted	Attachment
CPR Committee Chair	☐	☐	Amy Wharton	☐
Corporate Counsel	☐	☐		☐
Dir. of SW Management	☒	☐		☐
Grants Manager	☑	☐	Cheree Ann Cato	☐

FUNDING: Was funding previously approved? Yes ☒ No ☐ N/A ☐

If yes, provide the following: Dept/Div SW Mgmt-Proj. Mgmt Acct # *

Balance in Account * Amount needed for this item *

NEED: Identify any critical time constraint(s).

CFO's Signature: Amy Wharton

FISCAL IMPACT: Matching funds of $117,500.00 are budgeted in the Drainage Fund.

Mayor's Signature:

John J. Tecklenburg, Mayor

ORIGINATING OFFICE PLEASE NOTE: A FULLY STAFFED/APPROVED (except Mayor's Signature) PACKAGE IS DUE IN THE CLERK OF COUNCIL'S OFFICE NO LATER THAN 10:00 A.M THE DAY OF THE CLERK'S AGENDA MEETING.

NFWF	**NATIONAL FISH AND WILDLIFE FOUNDATION GRANT AGREEMENT**	**1. NFWF PROPOSAL ID:** 67037	**2. NFWF GRANT ID:** 0318.19.067037
		3. UNIQUE ENTITY IDENTIFIER (DUNS #) 077990786	**4. INDIRECT COST RATE (REFERENCE LINE 17 for RATE TERMS)** N/A

5. SUBRECIPIENT TYPE State or Local Government	**6. NFWF SUBRECIPIENT** City of Charleston, South Carolina
7. NFWF SUBRECIPIENT CONTACT	**8. NFWF GRANTS ADMINISTRATOR/NFWF CONTACT INFORMATION**
Sarah Fichera City of Charleston, South Carolina 2 George Street Charleston, SC 29401 Tel: 843-720-2535 ficheras@charleston-sc.gov	Amanda Crawford National Fish and Wildlife Foundation 1133 15th Street, N.W. Suite 1000 Washington, D.C. 20005 Tel:202-857-0166 Fax: 202-857-0162 Amanda.Crawford@nfwf.org

9. PROJECT TITLE
Johns Island Restoration Plan To Improve Flood Resiliency (SC)

10. PROJECT DESCRIPTION
Reduce barriers to coastal resilience by producing a preliminary floodplain restoration planning framework that will integrate ecological function to increase the overall resilience of Johns Island's communities, fish and wildlife. Project will evaluate how and where stream naturalization, floodplain protection and enhancement, wetland restoration/creation, and other nature-based infrastructure can be used to mitigate current and likely future flood risk on the island.

11. PERIOD OF PERFORMANCE	12. TOTAL AWARD TO SUBRECIPIENT	13. TOTAL FED. FUNDS	14. TOTAL NON-FED. FUNDS
July 1, 2020 to April 1, 2021	$117,500	$117,500	N/A

15. FEDERAL MATCH REQUIREMENT N/A	**16. NON-FEDERAL MATCH REQUIREMENT** $117,500

17. SUBRECIPIENT INDIRECT COST RATE TERMS
The rate specified in Line 4 reflects that the Subrecipient has elected not to claim an indirect cost rate and that this election shall apply throughout the project's period of performance.

18. TABLE OF CONTENTS

SEC.	DESCRIPTION
1	**NFWF Agreement Administration**
2	**NFWF Agreement Clauses**
3	**Representations, Certifications, and Other Statements – General**
4	**Representations, Certifications, and Other Statements Relating to Federal Funds- General**
5	**Representations, Certifications, and Other Statements Relating to Federal Funds – Funding Source Specific**
6	**Other Representations, Certifications, Statements and Clauses**

19. FUNDING SOURCE INFORMATION/FEDERAL AND NON-FEDERAL						
A. FUNDING SOURCE (FS)	**B. NFWF FS ID**	**C. FS AWARD DATE TO NFWF**	**D. FAIN**	**E. TOT FED. AWARD TO NFWF**	**F. TOT OBLG. TO SUBRECIPIENT**	**G. CFDA**
National Oceanic and Atmospheric Administration	FC.R416	February 7, 2020	NA20NOS4730002	$49,511,000	$117,500	11.473

20. NOTICE OF AWARD

The National Fish and Wildlife Foundation (NFWF) agrees to provide the NFWF Award to the NFWF Subrecipient for the purpose of satisfactorily performing the Project described in a full proposal as identified on line 1 and incorporated into this Grant Agreement by reference. The NFWF Award is provided on the condition that the NFWF Subrecipient agrees that it will raise and spend at least the amount listed on lines 15 and 16 in matching contributions on the Project, as applicable. The Project must be completed, with all NFWF funds and matching contributions spent, during the Period of Performance as set forth above. All items designated on the Cover Page and the Table of Contents are incorporated into this Grant Agreement by reference herein. NFWF Subrecipient agrees to abide by all statutory or regulatory requirements, or obligations otherwise required by law, required of a subrecipient of Federal grant or cooperative agreement funds. Subrecipient is obligated to notify NFWF if any of the information on the Cover Page changes in any way, whether material or immaterial.

A. NAME AND TITLE OF AUTHORIZED SUBRECIPIENT SIGNER (*Type or Print*)		**D. NAME AND TITLE OF NFWF AWARDING OFFICIAL** Holly A. Bamford, PhD, Chief Conservation Officer	
B. SUBRECIPIENT **BY**	**C. DATE**	**E. NATIONAL FISH AND WILDLIFE FOUNDATION** **BY**	**F. DATE**

See Reporting Schedule on the following page.

21. REPORTING DUE DATES/SUBRECIPIENT REPORTING SCHEDULE

Task Due Date	Reporting Task
October 31, 2020	Annual Financial Report
December 31, 2020	Interim Programmatic Report
July 1, 2021	Final Financial Report
July 1, 2021	Final Programmatic Report

SECTION 1 AGREEMENT ADMINISTRATION

1.1. Project Description/Purpose of Grant.

Reduce barriers to coastal resilience by producing a preliminary floodplain restoration planning framework that will integrate ecological function to increase the overall resilience of Johns Island's communities, fish and wildlife. Project will evaluate how and where stream naturalization, floodplain protection and enhancement, wetland restoration/creation, and other nature-based infrastructure can be used to mitigate current and likely future flood risk on the island.

1.2. Amendments.

During the life of the Project, the NFWF Subrecipient is required to inform the NFWF Grants Administrator of any changes in contact information or in the Project scope of work, as well as any difficulties in completing the performance goals articulated by the Project description immediately. If the NFWF Subrecipient determines that the amount of the budget is going to change in any one budget category by an amount that exceeds 10% of the Award, the NFWF Subrecipient must seek prior written approval from the Grants Administrator. NFWF Subrecipients must seek an amendment request upon determination of a deviation from the original Grant Agreement as soon as such deviation is detected. However, NFWF may initiate the amendment if NFWF determines an amendment is necessary at any time. Amendment requests are to be submitted via NFWF's Easygrants system.

1.3. Matching Contributions.

Matching Contributions consist of cash, contributed goods and services, volunteer hours, and/or property raised and spent for the Project. Matching Contributions for the purposes of this Project must meet the following criteria: (1) Are verifiable from the NFWF Subrecipient's records; (2) Are not included as contributions for any other Federal award; (3) Are necessary and reasonable for the accomplishment of project or program objectives; (4) Are allowable under OMB Cost Principles; (5) Are not paid by the U.S. Government under another Federal award except where the Federal statute authorizing a program specifically provides that Federal funds made available for such program can be applied to matching or cost sharing requirements of other Federal programs when authorized by Federal statute; (6) Are provided for in the approved budget when required by the Federal awarding agency; (7) Are committed directly to the project and must be used within the period of performance as identified in this Grant Agreement; (8) Otherwise conform to the law; and, (9) Are in compliance with the requirements of Section 2 of this Grant Agreement concerning Compliance with Anti-Corruption, Anti-Money Laundering, Terrorist Financing, and Trafficking in Persons Statutes and Other Restrictions.

1.3.1. Documentation and Reporting of Matching Contributions. The NFWF Subrecipient must retain detailed time records for contributed services and original receipts and appraisals of real property and comparable rentals for other contributed property at its place of business in the event of an audit of the NFWF Subrecipient as required by applicable Federal regulations.

1.3.2. Cash, Goods and Services, and/or Property. The NFWF Subrecipient must report to NFWF as a part of the Final Report, the Matching Contributions received by the NFWF Subrecipient and expended in connection with the Project. Fair market value of donated goods and services, including volunteer hours, shall be computed as outlined in §200.306 of 2 CFR Subtitle A, Chapter II, Part 200, Uniform Administrative Requirements, Cost Principles, and Audit Requirements for Federal Awards, (hereinafter "OMB Uniform Guidance"),regardless of whether this Grant Agreement is federally funded.

1.3.3. Property. The NFWF Subrecipient may have a third party donor submit a letter to NFWF, documenting the fair market value and date of a Matching Contribution and stating that the donation is non-Federal, voluntary, and intended to qualify as a Matching Contribution. A letter provided to document a donation of real property must be accompanied by an appraisal by a certified appraiser; a letter provided to document rental of equipment or space must list three comparable rentals in the location of the Project.

1.4. Payment of Funds.

To be eligible to receive funds, NFWF Subrecipient must (1) return to NFWF an original executed copy of the grant agreement for the Project; (2) submit any due financial and programmatic reports; and (3) submit a complete and accurate payment request. NFWF Subrecipient may request funds by submitting a Payment Request via Easygrants. NFWF Subrecipient may request advance payment of funds prior to expenditure provided that (1) NFWF Subrecipient demonstrates an immediate need for advance payment; and (2) NFWF Subrecipient documents expenditure of advanced funds on the next payment request and/or required financial report to NFWF. Approval of any advance payment of funds is made at the sole discretion of NFWF, based on an assessment of the NFWF Subrecipient's needs. In all other cases, funds are disbursed on a reimbursable basis. NFWF reserves the right to retain up to ten percent (10%) of funds until submission and acceptance of the final reports.

1.5. Reports.

1.5.1 Interim Programmatic and Financial Reports.

The NFWF Subrecipient will submit interim programmatic and financial reports to NFWF based on the reporting schedule in Line 21 of the Cover Sheet to this Agreement. The interim programmatic report shall consist of written statements of Project accomplishments since Project initiation, or since the last reporting period, and shall be uploaded via NFWF's Easygrants system. The interim financial report shall consist of financial information detailing cumulative receipts and expenditures made under this Project since Project initiation, and shall be uploaded via NFWF's Easygrants system.

1.5.2. Annual Financial Report.

An annual financial report detailing cumulative receipts and expenditures made under this Project is required annually, due on October 31st of each year of the grant term. In the annual financial report, the NFWF Subrecipient must report the amount of NFWF Funds expended during NFWF's fiscal year (October 1 – September 30). The NFWF Subrecipient must enter a justification when there is a difference between the amount disbursed by NFWF and the amount expended by the grantee. Failure to submit an annual financial report in a timely manner will delay payment of submitted payment requests.

1.5.3. Final Reports.

No later than 90 days after the completion of the Project, the NFWF Subrecipient will submit (1) a Final Financial Report accounting for all Project receipts, Project expenditures, and budget variances (if any) compared to the approved budget; (2) a Final Programmatic Report summarizing and evaluating the accomplishments achieved during the Period of Performance; (3) copies of any publications, press releases and other appropriate products resulting from the Project; and (4) Photographs as described in Section 1.5.3.1 below. The final reports and digital photo files should be uploaded via NFWF's Easygrants system. Any requests for extensions of the final reports submission date must be made in writing to the NFWF Grants Administrator and approved by NFWF in advance.

1.5.3.1. Photographs.

Together with the Final Programmatic Report NFWF Subrecipient will submit a representative number (minimum of 5) of high-resolution (minimum 300 dpi) photographs depicting the Project. Photographs should be uploaded via NFWF's Easygrants system as individual .jpg files. NFWF requests, as appropriate for the

Project, before-and-after images of the Project, images of species impacted by the Project, and images of staff/volunteers working on the Project. In the Final Programmatic Report narrative include for each submitted photograph the date the photograph was taken, the location of the photographed image, caption, photo credit, and any other pertinent information. By uploading photographs to NFWF's Easygrants system the NFWF Subrecipient certifies that the photographs are unencumbered and may be used by NFWF and Project Funders as part of or separately from the permissions pertaining to the use of posting of Final Reports in Section 2.

1.5.4 Significant Developments.

The NFWF Subrecipient shall report on events that may occur between the scheduled performance reporting dates that have a significant impact on the Project. Such reporting shall be made as soon as the following conditions become known:

1.5.4.1 Problems, delays, or adverse conditions which will materially impair the ability to meet the Project objective. This disclosure must include a statement of the action taken, or contemplated, and any assistance needed to resolve the matter; and,

1.5.4.2 Favorable developments which enable meeting time schedules and objectives sooner or at less cost than anticipated or producing more or different beneficial results than originally planned.

1.5.5. Certification and Representation.

For each report in this section, except for 1.5.4, NFWF Subrecipient shall include the appropriate certification and representation pursuant to section 4.8.

1.6. Access to Records.

NFWF Subrecipient shall maintain all records connected with this Agreement for a period of at least three (3) years following the date of final payment or the close-out of all pending matters or audits related to this Agreement, whichever is later. NFWF or any of its authorized representatives shall have access to such records and financial statements upon request, as shall Inspectors General, the Comptroller General of the United States or any of their authorized representatives if the Funding Source or any funding entity (*i.e.,* a secondary funding source) is a federal agency and/or any portion of the Project provided herein is paid with federal funds. NFWF Subrecipient must maintain records that demonstrate its compliance with federal statutory and regulatory requirements and that it is meeting the subaward project goals. Records for real property and equipment acquired with federal funds must be retained for at least three (3) years following disposition.

SECTION 2 NFWF AGREEMENT CLAUSES

2.1. Restrictions on Use of Funds.

The NFWF Subrecipient agrees that any funds provided by NFWF and all Matching Contributions will be expended only for the purposes and programs described in this Grant Agreement. No funds provided by NFWF pursuant to this Grant Agreement or Matching Contributions may be used to support litigation expenses, lobbying activities, or any other activities not authorized under this Grant Agreement or allowable under the Federal Cost Principles set forth in the OMB Uniform Guidance.

2.2. Assignment.

The NFWF Subrecipient may not assign this Grant Agreement, in whole or in part, to any other individual or other legal entity without the prior written approval of NFWF.

2.3. Subawards and Contracts.

When making subawards or contracting, NFWF Subrecipient (1) shall abide by all required granting and contracting procedures, including but not limited to those requirements of the OMB Uniform Guidance; (2) shall ensure that all applicable federal, state and local requirements are properly flowed down to the subawardee or contractor, including but not limited to the provisions of the OMB Uniform Guidance; and (3) shall ensure that such subaward or contracting complies with the requirements in Section 2.9.2 of this Grant Agreement concerning Compliance with Anti-Corruption, Anti-Money Laundering, Terrorist Financing, and Trafficking in Persons Statutes and Other Restrictions. NFWF Subrecipient shall also include in any subaward or contract a similar provision to this, requiring the use of proper grant and contracting procedures and subsequent flow down of federal, state and local requirements to lower-tiered subawardees and contractors.

2.4. Unexpended Funds.

Any funds provided by NFWF and held by the NFWF Subrecipient and not expended at the end of the Period of Performance will be returned to NFWF within ninety (90) days after the end of the Period of Performance.

2.5. Publicity and Acknowledgement of Support.

The NFWF Subrecipient gives NFWF the right and authority to publicize NFWF's financial support for this Grant Agreement and the Project in press releases, publications and other public communications. NFWF Subrecipient agrees to: (i) give appropriate credit to NFWF and any Funding Sources identified in this Grant Agreement for their financial support in any and all press releases, publications, annual reports, signage, video credits, dedications, and other public communications regarding this Grant Agreement or any of the project deliverables associated with this Grant Agreement, subject to any terms and conditions as may be stated in Section 5 and Section 6 of this Agreement; and (ii) include the disclaimer provided for herein. The NFWF Subrecipient must obtain prior NFWF approval for the use relating to this Award of the NFWF logo or the logo of any Funding Source.

2.5.1. Disclaimers.

Payments made to the NFWF Subrecipient under this Grant Agreement do not by direct reference or implication convey NFWF's endorsement nor the endorsement by any other entity that provides funds to the NFWF Subrecipient through this Grant Agreement, including the U.S. Government, as applicable, for the Project. All information submitted for publication or other public releases of information regarding this Grant Agreement shall carry the following disclaimer:

For Projects funded in whole or part with Federal funds: "The views and conclusions contained in this document are those of the authors and should not be interpreted as representing the opinions or policies of the U.S. Government or the National Fish and Wildlife Foundation and its funding sources. Mention of trade names or commercial products

does not constitute their endorsement by the U.S. Government, or the National Fish and Wildlife Foundation or its funding sources."

For Projects not funded with Federal funds: "The views and conclusions contained in this document are those of the authors and should not be interpreted as representing the opinions of the National Fish and Wildlife Foundation or its funding sources. Mention of trade names or commercial products does not constitute their endorsement by the National Fish and Wildlife Foundation or its funding sources."

2.6. Posting of Final Reports.

The NFWF Subrecipient hereby acknowledges its consent for NFWF and any Funding Source identified in this Grant Agreement to post its final reports on their respective websites. In the event that the NFWF Subrecipient intends to claim that its final report contains material that does not have to be posted on such websites because it is protected from disclosure by statutory or regulatory provisions, the NFWF Subrecipient shall so notify NFWF and any Funding Source identified in this Grant Agreement and clearly mark all such potentially protected materials as "PROTECTED," providing an accurate and complete citation to the statutory or regulatory source for such protection.

2.7. Website Links.

The NFWF Subrecipient agrees to permit NFWF to post a link on any or all of NFWF's websites to any websites created by the NFWF Subrecipient in connection with the Project.

2.8. Evaluation.

The NFWF Subrecipient agrees to cooperate with NFWF by providing timely responses to all reasonable requests for information to assist in evaluating the accomplishments of the Project for a period of five (5) years after the project end date, unless if any litigation, claim, or audit is started (irrespective of the NFWF Subrecipient's involvement in such matter) before the expiration of the 5-year period, the records shall be retained until all litigation, claims or audit findings or pending matters involving the records have been resolved and final action taken. NFWF shall notify NFWF Subrecipient if any such litigation, claim or audit takes place so as to extend the retention period.

2.9. Compliance with Laws.

2.9.1 In General. The NFWF Subrecipient agrees to conduct all such activities in compliance with all applicable Federal, State, and local laws, regulations, and ordinances and to secure all appropriate necessary public or private permits and consents. The terms of this provision will survive termination of this Grant Agreement and must be flowed down to any and all contractors, subcontractors or subrecipients entered into by NFWF Subrecipient in the performance of this Grant Agreement.

2.9.2. Compliance with Anti-Corruption, Anti-Money Laundering, Terrorist Financing, and Other Restrictions.

2.9.2.1. The NFWF Subrecipient shall ensure that no payments have been or will be made or received by the NFWF Subrecipient in connection with this Agreement in violation of the U.S. Foreign Corrupt Practices Act of 1977, as amended (15 U.S.C. §dd-1 *et seq.*), the UK Bribery Act 2010, or any other applicable anti-corruption laws or regulations in the countries in which the NFWF Subrecipient performs under this Grant Agreement.

2.9.2.2. The NFWF Subrecipient shall not provide material support or resources directly or indirectly to, or knowingly permit any funds provided by NFWF pursuant to this Grant Agreement or Matching Contributions to be transferred to, any individual, corporation or other entity that the NFWF Subrecipient knows, or has reason to know, commits, attempts to commit, advocates, facilitates, or participates in any terrorist activity,

or has committed, attempted to commit, advocated, facilitated or participated in any terrorist activity, including, but not limited to, the individuals and entities (1) on the master list of Specially Designated Nationals and Blocked Persons maintained by the U.S. Department of Treasury's Office of Foreign Assets Control, which list is available at www.treas.gov/offices/enforcement/ofac;(2) on the consolidated list of individuals and entities maintained by the "1267 Committee" of the United Nations Security Council at http://www.un.org/sc/committees/1267/aq_sanctions_list.shtml; (3) on the consolidated list maintained by the U.S. Department of Commerce at http://export.gov/ecr/eg_main_023148.asp, or (4) on such other list as NFWF may identify from time to time.

2.9.2.3 . The NFWF Subrecipient shall ensure that its activities under this Grant Agreement comply with all applicable U.S. laws, regulations and executive orders regarding money laundering, terrorist financing, U.S. sanctions laws, U.S. export controls, restrictive trade practices, boycotts, and all other economic sanctions or trade restrictions promulgated from time to time by means of statute, executive order, regulation or as administered by the U.S. Department of State, the Office of Foreign Assets Control, U.S. Department of the Treasury, or the Bureau of Industry and Security, U.S. Department of Commerce.

~~2.10. Arbitration.~~

~~All claims, disputes, and other matters in question arising out of, or relating to this Grant Agreement, its interpretation or breach, shall be decided through arbitration by a person or persons mutually acceptable to both NFWF and the NFWF Subrecipient. Notice of the demand for arbitration shall be made within a reasonable time after the claim, dispute, or other matter in question has arisen. The award rendered by the arbitrator or arbitrators shall be final. The terms of this provision will survive termination of this Grant Agreement.~~

~~2.11. Indemnity.~~

~~The NFWF Subrecipient shall indemnify and hold harmless NFWF, any Funding Source identified in this Grant Agreement, their respective officers, directors, agents, and employees in respect of any and all claims, injuries, losses, diminution in value, damages, liabilities, whether or not currently due, and expenses including without limitation, settlement costs and any legal or other expenses for investigating or defending any actions or threatened actions or liabilities arising from or in connection with the Project. The terms of this provision will survive termination of this Grant Agreement.~~

2.12. Insurance.

The NFWF Subrecipient agrees to obtain and maintain all appropriate and/or required insurance coverages against liability for injury to persons or property from any and all activities undertaken by the NFWF Subrecipient and associated with this grant agreement in any way. NFWF reserves the right to require additional insurance limits and policies based on specific activities under this Grant Agreement, that NFWF be named insured on all applicable insurance policies, and that the NFWF Subrecipient provide a certificate of insurance and/or copies of applicable insurance policies as requested by NFWF. The terms of this provision will survive termination of this Grant Agreement.

2.13. Choice of Law/Jurisdiction.

This Grant Agreement shall be subject to and interpreted by the laws of the State of South Carolina, without regard to choice of law principles. By entering into this Grant Agreement, the NFWF Subrecipient agrees to submit to the jurisdiction of the courts of the State of South Carolina. The terms of this provision will survive termination of this Grant Agreement.

2.14. Termination.

2.14.1. Upon the occurrence of any of the following enumerated circumstances, NFWF may terminate this Grant Agreement, or any portion thereunder, for default effective upon receipt by the NFWF Subrecipient of NFWF's written notice of termination, or as otherwise specified in the notice of termination:

2.14.1.1. The NFWF Subrecipient is adjudged or becomes bankrupt or insolvent, is unable to pay its debts as they become due, or makes an assignment for the benefit of its creditors; or,

2.14.1.2. The NFWF Subrecipient voluntarily or involuntarily undertakes to dissolve or wind up its affairs; or,

2.14.1.3. In the event of suspension or debarment by the Government of the NFWF Subrecipient; or,

2.14.1.4. In the event of any breach of the requirements set forth in Section 2 of this Grant Agreement concerning Compliance with Anti-Corruption, Anti-Money Laundering, Terrorist Financing, and Trafficking in Persons Statutes and Other Restrictions; or,

2.14.1.5. In the event NFWF learns that NFWF Subrecipient has an organizational conflict of interest, or any other conflict of interest, as determined in the sole discretion of NFWF, that NFWF believes cannot be mitigated; or,

2.14.1.6. After written notice and a reasonable opportunity to cure the perceived non-compliance with any material term of this Grant Agreement. The cure period shall be considered the timeframe specified by the Government, if any, minus one (1) to five (5) days or as agreed upon by the Parties in writing, or if no time is specified by the Government, ten (10) days or as otherwise agreed upon by the Parties. Within this time period the NFWF Subrecipient shall, as determined by NFWF, (a) satisfactorily demonstrate its compliance with the term(s) originally believed to be in non-compliance; or (b) NFWF, at its sole discretion, may determine that NFWF Subrecipient has satisfactorily demonstrated that reasonable progress has been made so as not to endanger performance under this Grant Agreement.

2.14.2. Either Party may terminate this Grant Agreement by written notice to the other Party for any reason by providing thirty (30) days' prior written notice to the other Party. NFWF shall have the right to terminate this Agreement in whole or in part at any time, if the Funding Source issues an early termination under the funding agreement(s) covering all or part of the Project at issue hereunder.

2.14.3. In the event of termination of this Grant Agreement prior to Project completion, the NFWF Subrecipient shall immediately (unless otherwise directed by NFWF in its notice if NFWF initiated the termination) undertake all reasonable steps to wind down the Project cooperatively with NFWF, including but not limited to the following:

2.14.3.1. Stop any portion of the Project's work that is incomplete (unless work to be completed and a different date for termination of work are specified in NFWF's notice).

2.14.3.2. Place no further work orders or enter into any further subawards or contracts for materials, services or facilities, except as necessary to complete work as specified in NFWF's notice.

2.14.3.3. Terminate all pending Project work orders, subawards, and contracts for work that has not yet commenced.

2.14.3.4. With the prior written consent of NFWF, promptly take all other reasonable and feasible steps to minimize and/or mitigate any damages that may be caused by the failure to complete the Project, including but not limited to reasonable settlements of any outstanding claims arising out of termination of Project work orders, subawards, and contracts.

2.14.3.5. Deliver or make available to NFWF all data, drawings, specifications, reports, estimates, summaries, and such other information and material as may have been accumulated by the NFWF Subrecipient under this Grant Agreement, whether completed or in progress.

2.14.3.6. Return to NFWF any unobligated portion of the Award.

2.15. Entire Agreement.

These terms and conditions, including the Attachments hereto, constitute the entire agreement between the Parties relating to the Project described herein and supersede all previous communications, representations, or agreements, either oral or written, with respect to the subject matter hereof. No representations or statements of any kind made by any representative of a Party, which are not stated herein, shall be binding on said Party.

2.16. Severability.

Each provision of this Grant Agreement is distinct and severable from the others. If one or more provisions is or becomes invalid, unlawful, or unenforceable in whole or in part, the validity, lawfulness and enforceability of the remaining provisions (and of the same provision to the extent enforceable) will not be impaired, and the Parties agree to substitute a provision as similar to the offending provision as possible without its being invalid, unlawful or unenforceable.

2.17. Interpretation and Construction.

2.17.1. This Grant Agreement shall be interpreted as a unified contractual document with the Sections and the Attachments having equal effect, except in the event of any inconsistency between them. In the event of a conflict between any portion of this Grant Agreement and another portion of this Grant Agreement, first the Sections will apply, then any supplemental attachments.

2.17.2. The title designations of the provisions to this Grant Agreement are for convenience only and shall not affect the interpretation or construction of this Grant Agreement.

2.17.3. Every right or remedy conferred by this Grant Agreement upon or reserved to the Parties shall be cumulative and shall be in addition to every right or remedy now or hereafter existing at law or in equity, and the pursuit of any right or remedy shall not be construed a selection.

2.17.4. The failure of NFWF to exercise any right or privilege granted hereunder or to insist upon the performance and/or compliance of any provision of this Grant Agreement, a referenced contractual, statutory or regulatory term, or an Attachment hereto, shall not be construed as waiving any such right, privilege, or performance/compliance issue, and the same shall continue in full force and effect.

2.17.5. Notwithstanding any express statements regarding the continuation of an obligation beyond the expiration or termination of this Grant Agreement, the rights and obligations of this Grant Agreement which by their nature extend beyond its expiration or termination shall remain in full force and effect and shall bind the Parties and their legal representatives, successors, heirs, and assigns.

SECTION 3 REPRESENTATIONS, CERTIFICATIONS, AND OTHER STATEMENTS GENERAL

3.1. Binding Obligation.

By execution of this Grant Agreement, NFWF Subrecipient represents and certifies that this Grant Agreement has been duly executed by a representative of the NFWF Subrecipient with full authority to execute this Grant Agreement and binds the NFWF Subrecipient to the terms hereof. After execution by the representative of the NFWF Subrecipient named on the signature page hereto, this Grant Agreement represents the legal, valid, and binding obligation of the NFWF Subrecipient, enforceable against the NFWF Subrecipient in accordance with its terms.

3.2. Additional Support.

In making this Award, NFWF assumes no obligation to provide further funding or support to the NFWF Subrecipient beyond the terms stated in this Grant Agreement.

3.3. Compliance with Laws.

By execution of this Grant Agreement and through its continued performance hereunder, the NFWF Subrecipient represents and certifies that it is conducting all such activities in compliance with all applicable Federal, State, and local laws, regulations, and ordinances and to secure all appropriate necessary public or private permits and consents.

3.4. Conflicts of Interest.

By execution of this Grant Agreement, NFWF Subrecipient acknowledges that it is prohibited from using any Project funds received under this Grant Agreement in a manner which may give rise to an apparent or actual conflict of interest, including organizational conflicts of interest, on the part of the NFWF Subrecipient. Such a conflict of interest would arise when the employee, officer, or agent, any member of his or her immediate family, his or her partner, or an organization which employs or is about to employ any of the parties indicated herein, has a financial or other interest in or a tangible personal benefit from a firm considered for a contract. The officers, employees, and agents of NFWF Subrecipient may neither solicit nor accept gratuities, favors, or anything of monetary value from contractors or parties to subcontracts. An organizational conflict of interest is defined as a relationship that because of relationships with a parent company, affiliate, or subsidiary organization, the non-Federal entity is unable or appears to be unable to be impartial in conducting a procurement action involving a related organization. The NFWF Subrecipient represents and certifies that it has adopted a conflict of interest policy that, at a minimum, complies with the requirements of the OMB Uniform Guidance, and will comply with such policy in the use of any Project funds received under this Agreement. NFWF Subrecipient may set standards for situations in which the financial interest is not substantial or the gift is an unsolicited item of nominal value. The standards of conduct must provide for disciplinary actions to be applied for violations of such standards by officers, employees, or agents of NFWF Subrecipient. If NFWF Subrecipient becomes aware of any actual or potential conflict of interest or organizational conflict of interest, during the course of performance of this Grant Agreement, NFWF subrecipient will immediately notify NFWF in writing of such actual or potential conflict of interest, whether organizational or otherwise.

SECTION 4 REPRESENTATIONS, CERTIFICATIONS, AND OTHER STATEMENTS RELATING TO FEDERAL FUNDS

4.1. If the Funding Source or any funding entity (*i.e.,* a secondary funding source) is a federal agency and/or any portion of the Project provided herein is paid with federal funds, the NFWF Subrecipient must read and understand certain applicable Federal regulations, including but not limited to, the following in Sections 4 and 5 of this Agreement as set forth herein.

If the NFWF Subrecipient is a Non-Profit Organization, Institution of Higher Education, State, Local or Tribal Government, it will need to understand and comply with the OMB Uniform Guidance (including related Supplements as may be applicable to a specific federal funding source(s), and Appendices as may be applicable), in addition to other applicable Federal regulations.

If NFWF Subrecipient subawards any portion of the Project under this Agreement to a third-party, NFWF Subrecipient shall, at a minimum, flow down those requirements and provisions required to be flowed down pursuant to the applicable regulations set forth above.

4.2. A-133 and 2 CFR § 200 Subpart F Audits.

It is the responsibility of subrecipients that are Non-Profit Organizations, State, Local or Tribal Governments to arrange for the conduct of audits as required by either OMB Circular A-133, "Audits of States, Local Governments, and Non Profit Organizations" or 2 CFR Part 200, Subpart F – Audit Requirements, whichever is applicable.

4.3. Interest.

Any interest earned in any one year on Federal funds advanced to the NFWF Subrecipient that exceeds $500 must be reported to NFWF, and the disposition of those funds negotiated with NFWF. Interest amounts up to $500 per year may be retained by the Subrecipient for administrative expense.

4.4. Subrecipient Debarment and Suspensions.

Unless NFWF Subrecipient has submitted a written justification fourteen (14) days prior to execution of this Grant Agreement, stating the reason that this term does not apply, which has been expressly accepted and approved by NFWF prior to execution, by and through NFWF Subrecipient's execution of this Grant Agreement, NFWF Subrecipient warrants and represents its initial and continued compliance that it is not listed on the General Services Administration's, government-wide System for Award Management Exclusions (SAM Exclusions), in accordance with the OMB guidelines at 2 C.F.R Part 180 that implement E.O.s 12549 (3 C.F.R., 1986 Comp., p. 189) and 12689 (3 C.F.R., 1989 Comp., p. 235), "Debarment and Suspension." The NFWF Subrecipient further provides that it shall not enter into any subaward, contract or other agreement using funds provided by NFWF with any party listed on the SAM Exclusions in accordance with Executive Orders 12549 and 12689. The SAM Exclusions can be found at https://www.sam.gov/portal/public/SAM/.

4.5. Mandatory Disclosure.

NFWF Subrecipient must disclose, in a timely manner, in writing to NFWF all violations of Federal criminal law involving fraud, bribery, or gratuity violations potentially affecting the Federal award. Failure to make required disclosures can result in any of the remedies described in this Grant Agreement, including termination, and any remedies provided under law, including suspension or debarment by cognizant federal authorities.

4.6. Trafficking in Persons.

Pursuant to section 106(a) of the Trafficking Victims Protection Act of 2000, as amended (22 U.S.C. 7104(g)) (codified at 2 C.F.R. Part 175), NFWF Subrecipient shall comply with the below provisions. Further, NFWF Subrecipient shall flow down these provisions in all subawards and contracts, including a requirement that Subrecipients similarly flow down these provisions in all lower-tiered subawards and subcontracts. The provision is cited herein:

I. Trafficking in persons.

a. *Provisions applicable to a recipient that is a private entity.*

1. You as the recipient, your employees, subrecipients under this award, and subrecipients' employees may not—
   i. Engage in severe forms of trafficking in persons during the period of time that the award is in effect;
   ii. Procure a commercial sex act during the period of time that the award is in effect; or
   iii. Use forced labor in the performance of the award or subawards under the award.
2. We as the Federal awarding agency's pass-through entity may unilaterally terminate this award, without penalty, if you or a subrecipient that is a private entity —
   i. Is determined to have violated a prohibition in paragraph a.1 of this award term; or
   ii. Has an employee who is determined by the agency official authorized to terminate the award to have violated a prohibition in paragraph a.1 of this award term through conduct that is either—
      A. Associated with performance under this award; or
      B. Imputed to you or the subrecipient using the standards and due process for imputing the conduct of an individual to an organization that are provided in 2 CFR part 180, "OMB Guidelines to Agencies on Government-wide Debarment and Suspension (Nonprocurement),".

b. *Provision applicable to a recipient other than a private entity.* We as the Federal awarding agency's pass-through entity may unilaterally terminate this award, without penalty, if a subrecipient that is a private entity-

1. Is determined to have violated an applicable prohibition in paragraph a.1 of this award term; or
2. Has an employee who is determined by the agency official authorized to terminate the award to have violated an applicable prohibition in paragraph a.1 of this award term through conduct that is either—
   i. Associated with performance under this award; or
   ii. Imputed to the subrecipient using the standards and due process for imputing the conduct of an individual to an organization that are provided in 2 CFR part 180, "OMB Guidelines to Agencies on Government-wide Debarment and Suspension (Nonprocurement),".

c. *Provisions applicable to any recipient.*

1. You must inform us immediately of any information you receive from any source alleging a violation of a prohibition in paragraph a.1 of this award term.
2. Our right to terminate unilaterally that is described in paragraph a.2 or b of this section:
   i. Implements section 106(g) of the Trafficking Victims Protection Act of 2000 (TVPA), as amended (22 U.S.C. 7104(g)), and
   ii. Is in addition to all other remedies for noncompliance that are available to us under this award.
3. You must include the requirements of paragraph a.1 of this award term in any subaward you make to a private entity.

d. *Definitions.* For purposes of this award term:

1. "Employee" means either:
   i. An individual employed by you or a subrecipient who is engaged in the performance of the project or program under this award; or
   ii. Another person engaged in the performance of the project or program under this award and not compensated by you including, but not limited to, a volunteer or individual whose services are contributed by a third party as an in-kind contribution toward cost sharing or matching requirements.
2. "Forced labor" means labor obtained by any of the following methods: the recruitment, harboring, transportation, provision, or obtaining of a person for labor or services, through the use of force, fraud, or coercion for the purpose of subjection to involuntary servitude, peonage, debt bondage, or slavery.
3. "Private entity":

i. Means any entity other than a State, local government, Indian tribe, or foreign public entity, as those terms are defined in 2 CFR 175.25.

ii. Includes:

A. A nonprofit organization, including any nonprofit institution of higher education, hospital, or tribal organization other than one included in the definition of Indian tribe at 2 CFR 175.25(b).

B. A for-profit organization.

4. "Severe forms of trafficking in persons," "commercial sex act," and "coercion" have the meanings given at section 103 of the TVPA, as amended (22 U.S.C. 7102).

4.7. Subrecipient Monitoring Requirements.

NFWF Subrecipients receiving federal funds understand that NFWF may require NFWF Subrecipient to take corrective action measures in response to a deficiency brought to NFWF and NFWF Subrecipient's attention during the course of an audit.

4.8. Certification and Representation.

NFWF Subrecipient must submit those certifications and representations required by Federal statutes, or regulations to NFWF on an annual basis. Submission may be required more frequently if the NFWF Subrecipient entity fails to meet a requirement of a Federal award.

Programmatic and financial reports or payment requests under a Federal award must be submitted by a representative of the NFWF Subrecipient who has the NFWF Subrecipient's full authority to render such reports and requests for payment and certify to the following at time of submission:

> By signing this [report] [payment request], I certify to the best of my knowledge and belief that the [report] [payment request] is true, complete, and accurate. [The expenditures, disbursements and cash receipts are for the purposes and objectives set forth in the terms and conditions of the Grant Agreement.]. I am aware that any false, fictitious, or fraudulent information, or the omission of any material fact, may subject me to criminal, civil or administrative penalties for fraud, false statements, false claims or otherwise. (U.S. Code Title 18, Section 1001 and Title 31, Sections 3729-3730 and 3801-3812).

4.9. 41 United States Code (U.S.C.) 4712, Enhancement of Recipient and Subrecipient Employee Whistleblower Protection:

(a) This award, related subawards, and related contracts over the simplified acquisition threshold and all employees working on this award, related subawards, and related contracts over the simplified acquisition threshold are subject to the whistleblower rights and remedies established at 41 U.S.C. 4712.

(b) Recipients, their subrecipients, and their contractors awarded contracts over the simplified acquisition threshold related to this award, shall inform their employees in writing, in the predominant language of the workforce, of the employee whistleblower rights and protections under 41 U.S.C. 4712.

(c) The recipient shall insert this clause, including this paragraph (c), in all subawards and contracts over the simplified acquisition threshold related to this award.

4.10. 41 USC §6306, Prohibition on Members of Congress Making Contracts with Federal Government.

No member of or delegate to Congress or Resident Commissioner shall be admitted to any share or part of this award, or to any benefit that may arise therefrom; this provision shall not be construed to extend to an award made to a corporation for the public's general benefit.

4.11. Executive Order 13513, Federal Leadership on Reducing Text Messaging while Driving.

(Sub)Recipients are encouraged to adopt and enforce policies that ban text messaging while driving, including conducting initiatives of the type described in section 3(a) of the order.

4.12. 43 CFR §18 New Restrictions on Lobbying.

The NFWF Subrecipient agrees to comply with 43 CFR 18, New Restrictions on Lobbying, including the following certification:

(a) No Federal appropriated funds have been paid or will be paid, by or on behalf of the
NFWF Subrecipient, to any person for influencing or attempting to influence an officer or employee of an agency, a Member of Congress, and officer or employee of Congress, or an employee of a Member of Congress in connection with the awarding of any Federal contract, the making of any Federal grant, the making of any Federal loan, the entering into of any cooperative agreement, and the extension, continuation, renewal, amendment, or modification of any Federal contract, grant, loan, or cooperative agreement.

(b) If any funds other than Federal appropriated funds have been paid or will be paid to any person for influencing or attempting to influence an officer or employee of any agency, a Member of Congress, an officer or employee of Congress, or an employee of a Member of Congress in connection with this Federal contract, grant, loan, or cooperative agreement, the undersigned shall complete and submit Standard Form-LLL, "Disclosure Form to Report Lobbying" in accordance with its instructions.

(c) The NFWF Subrecipient shall require that the language of this certification be included in the award documents for all subawards at all tiers (including subcontracts, subgrants, and contracts under grants, loans, and cooperative agreements) and that all Subrecipients shall certify accordingly. This certification is a material representation of fact upon which reliance was placed when this transaction was made or entered into. Submission of this certification is a prerequisite for making or entering into this transaction imposed by Section 1352, title 31, U.S. Code. Any person who fails to file the required certification shall be subject to a civil penalty of not less than $10,000 and not more than $100,000 for each such failure.

SECTION 5 REPRESENTATIONS, CERTIFICATIONS, AND OTHER STATEMENTS RELATING TO FEDERAL FUNDS – FUNDING SOURCE SPECIFIC

FC.R416

Pre-Award Matching Contributions.

The NFWF Subrecipient may begin accumulating pre-award matching contribution costs for Funding Source FC.R416 as of July 1, 2019. This pre-award waiver is only applicable to matching contributions; the NFWF Award listed on line 12 of the Cover Page of this Agreement must be expended within the period of performance listed on line 11.

Department of Commerce (DOC) Compliance Requirements.

The NFWF Subrecipient must comply with the terms and conditions of a DOC financial assistance award, including applicable provisions of the OMB Uniform Guidance (2 C.F.R. Part 200), and all associated Terms and Conditions set forth in the Department of Commerce Financial Assistance Standard Terms and Conditions Dated April 30, 2019, available at http://www.osec.doc.gov/oam/grants_management/policy/. See 2 C.F.R. § 200.101(b)(1) (Applicability), which describes the applicability of 2 C.F.R. Part 200 to various types of Federal awards and §§200.330-332 (Subrecipient monitoring and management). Additionally, the NFWF Subrecipient must flow these requirements down to all subrecipients and contractors, including lower tier subrecipients.

Equipment Reporting.

Equipment or supplies (aggregate supplies, not per unit) at a cost of $5,000 or greater per unit value, including its fair market value, must be inventoried at least once every two years and at award closeout (2 CFR 200.313). NFWF Subrecipients may use the outdated SF-428 form series to report on tangible property or submit their own customized report including a description of federally owned equipment, identification information, acquisition cost, and acquisition date. More guidance on property definitions and forms is posted online at coast.noaa.gov/funding/forms.html.

Handling of Environmental Data or Peer Reviewed Publications.

a) Data Sharing: Environmental data collected or created under this Grant, Cooperative Agreement, or Contract must be made publicly visible and accessible in a timely manner, free of charge or at minimal cost that is no more than the cost of distribution to the user, except where limited by law, regulation, policy, or national security requirements. Data are to be made available in a form that would permit further analysis or reuse: data must be encoded in a machine-readable format, preferably using existing open format standards; data must be sufficiently documented, preferably using open metadata standards, to enable users to independently read and understand the data. The location (internet address) of the data should be included in the final report. Pursuant to NOAA Information Quality Guidelines, data should undergo quality control (QC) and a description of the QC process and results should be referenced in the metadata. Failure to perform quality control does not constitute an excuse not to share data. Data without QC are considered "experimental products" and their dissemination must be accompanied by explicit limitations on their quality or by an indicated degree of uncertainty.
b) Timeliness: Data accessibility must occur no later than publication of a peer-reviewed article based on the data, or two years after the data are collected and verified, or two years after the original end date of the grant (not including any extensions or follow-on funding), whichever is soonest, unless a delay has been authorized by the NOAA funding program.
c) Disclaimer: Data produced under this award and made available to the public must be accompanied by the following statement: "These data and related items of information have not been formally disseminated by NOAA, and do not represent any agency determination, view, or policy."

d) Failure to Share Data: Failing or delaying to make environmental data accessible in accordance with the submitted Data Management Plan, unless authorized by the NOAA Program, may lead to enforcement actions, and will be considered by NOAA when making future award decisions. Funding recipients are responsible for ensuring these conditions are also met by sub-recipients and subcontractors.

e) Funding acknowledgement: Federal funding sources shall be identified in all scholarly publications. An Acknowledgements section shall be included in the body of the publication stating the relevant Grant Programs and Award Numbers. In addition, funding sources shall be reported during the publication submission process using the FundRef mechanism (http://www.crossref.org/fundref/) if supported by the Publisher.

f) Manuscript submission: The final pre-publication manuscripts of scholarly publications produced with NOAA funding shall be submitted to the NOAA Institutional Repository at http://library.noaa.gov/repository after acceptance, and no later than upon publication, of the paper by a journal. NOAA will produce a publicly-visible catalog entry directing users to the published version of the article. After an embargo period of one year after publication, NOAA shall make the manuscript itself publicly visible, free of charge, while continuing to direct users to the published version of record.

g) Data Citation: Publications based on data, and new products derived from source data, must cite the data used according to the conventions of the Publisher, using unambiguous labels such as Digital Object Identifiers (DOIs). All data and derived products that are used to support the conclusions of a peer-reviewed publication must be made available in a form that permits verification and reproducibility of the results.

Scientific Integrity.

a) *Maintaining Integrity.* The NFWF Subrecipient shall maintain the scientific integrity of research performed pursuant to this grant or financial assistance award including the prevention, detection, and remediation of any allegations regarding the violation of scientific integrity or scientific and research misconduct, and the conduct of inquiries, investigations, and adjudications of allegations of violations of scientific integrity or scientific and research misconduct. All the requirements of this provision flow down to subrecipients.

b) *Peer Review.* The peer review of the results of scientific activities under a NOAA grant, financial assistance award, or cooperative agreement shall be accomplished to ensure consistency with NOAA standards on quality, relevance, scientific integrity, reproducibility, transparency, and performance. NOAA will ensure that peer review of "influential scientific information" or "highly influential scientific assessments" is conducted in accordance with the Office of Management and Budget (OMB) Final Information Quality Bulletin for Peer Review and NOAA policies on peer review, such as the Information Quality Guidelines.

c) In performing or presenting the results of scientific activities under the NOAA grant, financial assistance award, or cooperative agreement and in responding to allegations regarding the violation of scientific integrity or scientific and research misconduct, the NFWF Subrecipient and all subrecipients shall comply with the provisions herein and NOAA Administrative Order (NAO) 202-735D, Scientific Integrity, and its Procedural Handbook, including any amendments thereto. That Order can be found at https://nrc.noaa.gov/ScientificIntegrityCommons.aspx.

d) *Primary Responsibility.* The NFWF Subrecipient shall have the primary responsibility to prevent, detect, and investigate allegations of a violation of scientific integrity or scientific and research misconduct. Unless otherwise instructed by the grants officer, the recipient shall promptly conduct an initial inquiry into any allegation of such misconduct and may rely on its internal policies and procedures, as appropriate, to do so.

e) By executing this grant, financial assistance award, or cooperative agreement the NFWF Subrecipient provides its assurance that it has established an administrative process for performing an inquiry, investigating, and reporting allegations of a violation of scientific integrity or scientific and research misconduct; and that it will comply with its own administrative process for performing an inquiry, investigation, and reporting of such misconduct.

f) The NFWF Subrecipient shall insert this provision in all subawards at all tiers under this grant, financial assistance award, or cooperative agreement.

SECTION 6 REPRESENTATIONS, CERTIFICATIONS, AND OTHER STATEMENTS RELATING TO NON-FEDERAL FUNDS – FUNDING SOURCE SPECIFIC

This page left intentionally blank

CPR COMMITTEE and/or COUNCIL AGENDA

TO: John J. Tecklenburg, Mayor

FROM: Joe Swaim / Andrew Jones **DEPT.** Stormwater Management

SUBJECT: HUGER-KING STREET DRAINAGE IMPROVEMENTS FEE AMENDMENT #1

REQUEST: Approval of Fee Amendment #1 with Johnson, Mirmiran & Thompson, Inc., in the amount of $582,970.47 for enhanced environmental construction services, pump station and force main design and general consulting services.

COMMITTEE OF COUNCIL: Ways & Means **DATE:** September 8, 2020

COORDINATION: This request has been coordinated with: *(attach all recommendations/reviews)*

	Yes	N/A	Signature of Individual Contacted	Attachment
CPR Committee Chair	☐	☐	Amy Wharton	☐
Corporate Counsel	☐	☐	[illegible]	☐
Dir. of SW Management	☒	☐	[illegible]	☐
MBE Manager	☐	☐		☐

FUNDING: Was funding previously approved? Yes ☒ No ☐ N/A ☐

If yes, provide the following: Dept/Div SW Mgmt-Proj. Mgmt Acct # 050370-58238

Balance in Account $582,970.47 Amount needed for this item $582,970.47

NEED: Identify any critical time constraint(s).

CFO's Signature: Amy Wharton

FISCAL IMPACT: **Approval of Fee Amendment #1 will increase the Professional Services Contract by $582,970.47 (from $405,061.21 to $988,031.68) Funding for this project is from the Cooper River Bridge TIF ($1,000,000.00), South Carolina Rural Infrastructure Authority Grant ($499,292.00) and Stormwater Operations ($3,000).**

Mayor's Signature: [signature]
John J. Tecklenburg, Mayor

ORIGINATING OFFICE PLEASE NOTE: A FULLY STAFFED/APPROVED (except Mayor's Signature) PACKAGE IS DUE IN THE CLERK OF COUNCIL'S OFFICE NO LATER THAN 10:00 A.M THE DAY OF THE CLERK'S AGENDA MEETING.

AMENDMENT NO. 1
TO THE
STANDARD FORM OF AGREEMENT
BETWEEN OWNER AND ENGINEER
FOR
PROFESSIONAL SERVICES

****

Professional Services for Huger Street and King Street Improvement Project

INTIAL:

OWNER: _____

ENGINEER: _____

This is an Amendment to the Agreement between the City of Charleston (Owner) and Johnson, Mirmiran & Thompson (Engineer) dated July 16th, 2019 (hereafter referred to as the Agreement in the office of the Clerk of Council at City Hall, 80 Broad Street, Charleston SC). This said Amendment is effective as of _____.

1. Owner and Engineer, in consideration of their mutual covenants as set forth herein, agree to expand the compensation of the aforesaid Agreement for Construction Documents and Permitting related to the Huger & King Street Intersection Pump Station with tasks identified in Attachment A – Scope of Services dated July 15th, 2020.

2. The Engineer shall submit to the Owner itemized invoices identifying the individuals that performed services, the hourly rate for each individual, and the itemized statement of reimbursable expenses for Owner's approval. Invoices will be calculated based upon the actual effort incurred using the hourly and reimbursable expenses rate schedules.

3. Owner and Engineer agree to amend Exhibit C, Article 4, C4.03, A.1 of the Agreement in consideration of the additional services to increase the not-to-exceed fee to $582,970.47 (which is an increase of $582,970.47 for this Amendment 1) as summarized in the attached Exhibit Cost Summary Report for a total Contract amount of $988,031.68.

4. In all other respects, the Agreement remains unmodified and in full force and effect.

City of Charleston
OWNER

By: _____
Name: John J. Tecklenburg
Title: Mayor
Address: P.O. Box 652
Charleston, SC 29402

Johnson, Mirmiran & Thompson, Inc.
ENGINEER

By: _____
Name: James K. O'Connor, P.E.
Title: Vice President
Address: 235 McGrath Darby Blvd., Suite 275
Mount Pleasant, SC 29464

August 4th, 2020

City of Charleston
Department of Stormwater Management
2 George St.
Charleston, South Carolina 29401

Attn: Joe Swaim, Senior Engineering Project Manager

RE: Huger and King St. Pump Station Improvement Project MSA
JMT Job No. 19-0695-000

Mr. Swaim:

Johnson, Mirmiran & Thompson (JMT) is pleased to submit our scope of services and fees for the work associated with the Huger St. and King St. Pump Station Improvements. This scope and the not to exceed fee has been prepared based on discussions with the City.

Our fees for the next Tasks under this MSA are as follows:

TASK 4: Enhanced Environmental Construction Services (S&ME)
Subtask 1: Contaminated Soil Handling Inspections during Construction of the Intersection Improvements (T&M)
Total Fee: $10,870 (Not to Exceed)

TASK 5: Huger and King St. Pump Station and Force Main Design
Subtask 1: Project Management & Meetings - $48,141.66
Subtask 2: Civil Design (Site Plan, Force Main and Wet Pond) - $110,526.008
Subtask 3: Landscape and Architectural Design (SGA / Narmour Wright Design) - $60,174.13
Subtask 4: Pump Station, Intake and Discharge Structure (JMT) - $222,504.25
Subtask 5: Permitting (JMT) - $67,597.50
Subtask 6: Geotechnical (Soil Consultants, Inc.) - $20,596.96
Subtask 7: Preliminary Noise Analysis - $3,048.84
Subtask 8: Construction Support (Bidding Services Only) - $10,717.05
Reimbursables: $3,794.00
Total Fee: $547,100.47 (Not to Exceed)

TASK 6: General Consulting Services
General Consulting Services (T&M)
Total Fee: $25,000 (Not to Exceed)

Total JMT Services	**= $497,074.97**
Total Subconsultant Services	**= $85,895.50**
TOTAL CONTRACT VALUE	**= $582,970.47** (Not to Exceed)

We will immediately notify you if we are requested to perform any task that is not within the approve scope of services. Invoices will be submitted monthly upon receiving written approval of the task order assignment.

JMT is ready to begin the assignment at once and assist the City of Charleston in meeting their schedule. We appreciate the opportunity to provide engineering and planning services. If you should have any questions regarding this proposal, please do not hesitate to contact Ryan Mattie at 843-779-3705 or RMattie@jmt.com.

Sincerely,
JOHNSON, MIRMIRAN & THOMPSON, INC.

James K. O'Connor, P.E.
Vice President

cc: JMT: Mike Luning, Geoff Chenoweth, Matt Thomas, Chris Reddick, Ryan Mattie

TASK 4: Enhanced Environmental Construction Services (S&ME) (NOT TO EXCEED $10,870)

This Task includes environmental tasks to be performed during construction activities by the contractor for the Huger and King St. intersection improvements project, which is the initial phase of the Pump Station projects scoped in Task 5. This task is proposed as a time and material basis and will be performed by S&ME as part of the construction services management and inspection provided by JMT.

SUBTASK 1: PROVIDE ENVIRONMENTAL CONSULTING SERVICES FOR THE PROJECT

A. We propose to perform various environmental consulting services during construction activities for the Project. We understand our consulting services may be requested during project meetings and telephone calls with project representatives and via email correspondence and technical memoranda. We anticipate the environmental consulting services may include, but are not limited to, providing assistance to JMT and the City during coordination with the:

- The landfill regarding profiling of Excess Contaminated Soil (as defined in Specification Section 02 61 13) for disposal
- Charleston Water System regarding discharge of Excess Contaminated Groundwater (as defined in the Specification Section 02 61 13) from dewatering activities into the existing sanitary sewer system
- SCDOT regarding discharge of groundwater from dewatering activities into the existing stormwater system; and/or
- SCDHEC regarding possible soil/groundwater assessment or remediation activities to be performed by others on the Project area.

B. As part of the environmental soil and groundwater assessment being performed for the City, we will collect soil samples from the Project area for laboratory analysis of metals, volatile organic compounds (VOCs), and semivolatile organic compounds (SVOCs) by the Toxicity Characteristic Leaching Procedure (TCLP) and for Total Petroleum Hydrocarbons - Gasoline Range Organics (TPH-GRO). Upon approval of JMT and the City, we anticipate providing a copy of the TCLP and TPH-GRO laboratory testing results to the contractor for their use in profiling the soil for disposal at a landfill. We assume the landfill will accept the forthcoming TCLP and TPH-GRO laboratory testing results for profiling and disposal purposes. If the landfill requires additional characterization of Excess Contaminated Soil from the Project area for disposal, we will provide an additional proposal to conduct the additional soil characterization.

C. As part of the environmental soil and groundwater assessment being performed for the City, we will also collect groundwater samples from the Project area for laboratory analysis of metals and petroleum-related VOCs and SVOCs. Upon approval of JMT and the City, we anticipate providing a copy of the groundwater laboratory testing results to Charleston Water System or SCDOT regarding discharge of dewatering groundwater. We assume Charleston Water System and SCDOT will accept the forthcoming groundwater laboratory testing results for discharge purposes. If Charleston Water System or SCDOT requires additional characterization of groundwater for discharge, we will provide an additional proposal to conduct the additional groundwater characterization..

SUBTASK 2: PERFORM ON-SITE OBSERVATIONS AND SUBMITTAL/DATA REVIEW AS NEEDED

A. During Project construction activities, S&ME proposes to perform periodic, on-site observations involving management of soil and groundwater and to perform reviews of

petroleum-related soil and groundwater submittals and data collected by the contractor as may be required during the Project. The on-site observations and submittal/data reviews will be performed on behalf of JMT and the City. We will document our on-site observations and submittal/data reviews via brief letters and/or email correspondence to be submitted to JMT and the City.

Assumptions:

1) *The following are not included in this Task:*
   - *Soil or groundwater sampling or laboratory testing are not included in this proposal*
   - *Services associated with handling or permitting hazardous waste.*
   - *Health and safety services including, but not limited to, plan preparation, training, supervision, or compliance*
   - *Construction materials testing services; and*
   - *Geotechnical engineering services*

TASK 5: Huger and King St. Pump Station Design

Johnson, Mirmiran & Thompson (CONSULTANT) will assist the City of Charleston (CITY) by providing design and construction support services for the design of a pump station near the intersection of Huger Street and King Street. The pump station is anticipated to be located on the Housing Authority Property located at the northeast corner of the intersection. This phase of the work will include design of the pump station, adjacent wet well, force main and drainage connections to the recently designed intersection work. The construction documents will include final plans (100%), specifications/special provisions, and an engineer's opinion of probable construction cost. The plans, specifications, and estimate will be submitted to the CITY of Charleston for review and approval.

SUBTASKS TO BE PERFORMED

SUBTASK 1: PROJECT MANAGEMENT & MEETINGS (JMT)
SUBTASK 2: CIVIL DESIGN (SITE PLAN, FORCE MAIN AND WET WELL POND) (JMT)
SUBTASK 3: LANDSCAPE AND ARCHTIECTURAL DESIGN (SGA / NARMOUR WRIGHT DESIGN)
SUBTASK 4: PUMP STATION, INTAKE AND DISCHARGE STRUCTURE (JMT)
SUBTASK 5: PERMITTING (JMT)
SUBTASK 6: GEOTECHNICAL (SOIL CONSULTANTS, INC.)
SUBTASK 7: PRELIMINARY NOISE ANALYSIS (JMT)
SUBTASK 8: CONSTRUCTION SUPPORT

These tasks are detailed in the following sections.

SUBTASK 1: PROJECT MANAGEMENT & MEETING ($48,141.66)

Project goals and objectives will be determined through coordination between the CONSULTANT and the CITY. The process will include the following duties:

B. Coordinate with the CITY's Program Manager. Arrange and attend project meetings, conferences and on-site review meetings. Prepare and distribute meeting minutes.

C. Manage and monitor the project schedule as set forth in the contract. Keep the CITY up to date on the schedule and items that may affect the overall project schedule.

D. Provide the CITY with a project opinion of probable construction cost.

E. Prepare monthly invoices for CITY review, approval and payment. Review subconsultant invoices and cost submittals included for payment in monthly invoices. Monitor payments to subconsultants' services provided.

F. Provide monthly status reports detailing the progress of the project to include milestones reached and issues encountered and satisfactorily resolved during the previous month, and updated project schedule.

G. Provide overall management of all design efforts including the management of the CONSULTANT'S subconsultants and team members. Monitor subconsultant activities, accuracy of work, and adherence to overall project schedule and budget.

H. Coordinate activities and design with other involved Agencies.

I. CONSULTANT will assist the CITY with one (1) public meeting. CONSULTANT will participate and prepare the following:

- Roll Display Plan
- Prepare general notes of meeting (not individual comment/responses)

J. Implement quality assurance and quality control measures to produce plans that conform to the Code of the City of Charleston and the adopted sections of the International Building Codes, NFPA 820, NFPA 70, South Carolina Department of Transportation (SCDOT) and Federal Highway Administration (FHWA) guidelines and standards.

Assumptions:

2) *4 CITY meetings (Kickoff Meeting, Preliminary Design Review, Final Design Review, Misc. Update)*
3) *SCDOT meetings.*
4) *1 Housing Authority Meeting.*
5) *1 stakeholder meetings. This will include stakeholder meetings with the properties under development. CITY to coordinate and handle logistics of the meeting, including invitations of necessary attendees.*
6) *1 Public Meetings. The CITY will schedule, obtain the location, advertise, and make all location accommodations.*

Deliverables:

1) *Monthly status reports will be provided.*
2) *Meeting minutes will be provided.*

SUBTASK 2: CIVIL DESIGN (SITE PLAN, FORCE MAIN AND WET POND) ($110,526.08)

Design and Engineering

Included in this task is the development, design, and approval of the site plan, including the collection pond, and force main leaving the site in route to Newmarket Creek. This effort builds on the PDR conclusions which identified the pond location, basic elements of the site plan and the route of the force main. That document is considered to be 35% design of these elements.

65 % Design Submission

A. The CONSULTANT will perform geotechnical investigation needed to design the pond and

liner, support structures and design the trench for the force main (see Subtask 6).

B. The CONSULTANT will coordinate with the City Traffic and Transportation department regarding traffic control requirements.

C. CONSULTANT will prepare 65% complete design plans for the project. Development of plans will begin immediately after notice to proceed. The survey data collected during the initial Huger Street Stormwater Modeling and Drainage Project will be utilized to prepare the plans.

D. CONSULTANT will establish alignments, grades, location and profiles in sufficient detail and in the appropriate format, in order to clearly illustrate significant design features of the project. The Plans will include:

- Title Sheet: A Title Sheet template will be provided by the CITY. CONSULTANT to utilize the template to generate the project specific title sheet.
- Typical Sections: CONSULTANT will develop typical sections of the wet well and of the pump station, as necessary.
- Site Plan will be developed indicating location of key elements, drainage features, and setbacks. The site plan will conform to City standards and TRC requirements.
- Demolition/Excavation Plan: CONSULTANT will develop a plan to note existing improvements that need to be removed during construction. This plan will include details on excavation for the collection pond with cross section and liner details.
- Geometric Layout: CONSULTANT will generate the geometric layout sheet that will include the survey control line and the baseline of construction.
- Profiles (1"=5' vertical): CONSULTANT will generate the profile for discharge force main.
- Force Main Plan Sheets (1"=20'). It is anticipated that 4 sheets will be required.
- Wet Well Pond Plan and Cross Sections: CONSULTANT will generate cross sections every 25'. The cross sections will indicate existing ground and proposed ground.
- The wet well pond will include an aerator/fountain.
- Maintenance of Traffic Sheets / Traffic Control Plans: Maintenance of traffic plans will be prepared for the project. The plans will show the concept maintenance of traffic. Preliminary plans will be developed showing the signing associated with the detour route and the flagging.

E. Representatives from the CITY and the CONSULTANT, involved in project will perform:

(1) Design Review meeting during the preliminary design plan development. All information gathered during field investigations will be evaluated and the plans revised accordingly.

(2) Coordination of SUE efforts including up to 15 test holes.

F. The CONSULTANT will identify conflicts with existing utilities and send the utility companies notice of the proposed project. The CONSULTANT will start the utility coordination process as early as possible to allow as much time as possible for the utility companies to respond.

G. The CONSULTANT will prepare a preliminary construction opinion of probable construction cost.

Assumptions:

1) *The CITY to provide one round of written comments after initial submittal.*
2) *One Design Review while 65% plans are under development.*

3) No traffic studies.
4) Pavement design will match Huger Street Streetscape Project section.
5) No transit facilities.
6) The curbing material will match the existing curb and gutter.
7) Sidewalks material will match the existing sidewalks.
8) The CITY will provide a Title Sheet electronically.
9) Flexible pavement will be proposed.
10) City will provide any studies regarding soils investigation of previously owned Coastal Railroad Right of Way.
11) No driveway profiles and curb return profiles will be developed.
12) No erosion and sediment control plans.
13) No permits will be applied during 65% Plan development.
14) Technical Specification will not be provided at 65% Submittal.

Deliverables:

1) *Drainage/Stormwater Technical Report. Three (3) paper copies.*
2) *Ten (10) half-size sets of Preliminary Design Plans. One (1) electronic copy of all AutoCAD files upon request.*
3) *One (1) CD/electronic copy (PDF).*
4) Opinion of probable construction cost

95% Construction Plan Submission

A. The CONSULTANT will further develop the Design Plans into nearly completed Construction Plans consisting of:

- Title Sheet: Update sheet for final plans
- 95% Completed Construction Plans will incorporate design changes agreed to after review of the 65% plans and further develop the plans to construction level.
- Technical Specifications will be prepared for required elements.
- Additionally, the drawings will include:
  - Details of construction elements. Including outlet structure plans, foundations, energy dissipation details, downstream modifications pipe bedding and trench, valves and valve structures, intake structure, screening and station piping.
- Geometric Layout: Update sheets for final plans.
- Profiles (1"= 20' horizontal and 1"=5' vertical): Update sheets for final plans.
- Stormwater (Drainage) Technical Report:
  - Proposed Drainage System Design calculations.
  - Wet Well Pond configuration and sizing.
  - Map showing type and classification of all soils expected to be encountered or used at the development site.
  - Erosion and Sediment Control calculations and summary.
  - Erosion and Sediment Control Plans, construction sequence and Details (in accordance with SC DOT Standards)
- Maintenance of Traffic Sheets: Maintenance of traffic plans will be updated per comments

and refined roadway engineering efforts. The maintenance of traffic will be dependent upon the exact location that requires total reconstruction. It is assumed that the construction will include both flagging operations and a one–way detour to address the full depth reconstruction.

B. The CONSULTANT will prepare the specifications book for project letting. These documents will be signed and sealed as necessary. The CITY will provide 00 – Procurement section and an example book from a previous project.

C. The CONSULTANT will prepare a 95% opinion of probable construction cost.

D. Signed and sealed Construction Plans shall be provided to the CITY.

E. Representatives from the CITY and CONSULTANT will perform one (1) field reconnaissance meeting during the final construction plan development. All information gathered during these field investigations will be evaluated and plans revised accordingly.

F. Waiver for stormwater quality and peak discharge

Assumptions:

1) *The CITY to provide one round of written comments after Construction Plans submittal.*
2) *No additional field surveys will be required.*
3) *The Consultant will prepare the Project Specification Book.*
4) *A waiver for water quality and peak flow rate will be granted or will be addressed with pump station phase.*

Deliverables:

1) DRC/TRC Plan Sets as required for approval
2) *One (1) full-size set of plans, ten (10) half-size set, and one (1) set of electronic files of Final Construction Plans and Specifications.*
3) *One (1) hard copy of the special provisions.*
4) *One (1) hard copy and (1) electronic copy of the* opinion of probable construction cost.

Bid Submission

A. CONSULTANT will provide a Comment / Response to Final Plan Submission.

B. CONSULTANT will address any comments provided by the CITY from the Final Plans Submission.

C. CONSULTANT will address any comments provided by the CITY from the Final Special provisions.

D. CONSULTANT will address any comments provided by the CITY from the Final opinion of probable construction cost.

Assumptions:

1) *The CITY to provide one round of written comments after Construction Plans submittal.*
2) *The CITY will prepare the Project Specification Book.*

Deliverables:

4) *One (1) original full-size set of plans, special provisions, and* opinion of probable construction cost.

SUBTASK 3: LANDSCAPE AND ARCHTIECTURAL DESIGN (SGA / NARMOUR WRIGHT DESIGN) ($60,174.13)

Pump House Architectural Screening

SGANW (SGA / Narmour Wright Design) will provide architectural services for design of the Enclosure Structure to screen Pump Station facing Huger Street as well as sides facing interior of the property. It is anticipated that Structure of the Enclosure will be masonry to complement the Enston William Homes historic structures. Nevertheless, to meet the set project's budget the final Materials of the Enclosure will be determined through the consultation process with City Staff of Urban Design and Preservation Division as well as DRC Staff. William Enston Homes is a Landmark property required by the Ordinance to be reviewed by the Boards. The preparation, submittal, and presentation of the required documents for Boards review are included in the services scope below.

Landscape Architecture

SGANW to provide landscape architecture services by coordinating with engineering and architecture teams to aid in the design of pond shape and layout, as well as planting to buffer said pond and pump house screen wall. The preparation, submittal, and presentation of the required documents for Boards review are included in the services scope below.

Neighborhood meetings with Enston Homes Community

A. Execute (1) meeting w/ community prior to design to gather input from community as we as to inform, and hopefully mitigate resistance to improvements/BAR approval
B. Execute (1) meeting with community after conceptual approval to discuss design, and to receive comments from neighborhood prior to prelim/final combined submittal

65 % Design Submission

A. Screen wall
   - Rendered Elevations
   - Sample material images
B. Landscape buffers for storm water pump house screening, and pond
   - Trees, shrubs, and ground cover
   - Lawns and Turf
   - Fence locations and general design aesthetic
   - Site furnishings locations (if necessary)
C. Outline technical specifications to be included in the project manual prepared by others
D. Prepare plans for one (1) TRC Meeting
E. Prepare plans for one (1) Preliminary BAR Meeting, to be assembled and submitted by others
F. Execute revisions based on feedback from BAR meeting

Assumptions:

1) *Attend up to three (3) project design team coordination meetings*
2) *Schedule one (1) final presentation meeting or conference call with the Client or Design Team to review Schematic Design Package*
3) *Attend and present at one (1) TRC meeting*
4) *Attend and present at one (1) Preliminary BAR meeting*

95 % Design Submission

A. The CONSULTANT will further develop the Design Plans into nearly completed Construction Plans consisting of:

- Hardscape Construction and Materials Plan
- Construction Layout Plan
- Construction & Site Details
- Planting Plan
- Plant Schedule and Details
- Site furnishing Schedule and Details (if necessary)
- Irrigation Plan

B. Coordinate the preparation of Construction Documents as produced by Design Team consultants as part of a comprehensive Construction Bid Package prepared by others.
C. Provide written technical specifications to be included in the project manual.
D. Prepare plans for one (1) Design Review Committee (DRC) Meeting.
E. Attend and present at one (1) Preliminary DRC meeting.
F. Prepare plans for one (1) combined Preliminary/Final BAR Meeting.
G. Execute revisions based on feedback from BAR/TRC/DRC meetings.

Assumptions:

1) Attend up to three (3) project design team coordination meetings
2) Schedule one (1) final presentation meeting or conference call with the Client or Design Team to review Schematic Design Package
3) Attend and present at two (2) TRC meetings
4) Attend and present at two (2) Preliminary/Final BAR meetings

SUBTASK 4: PUMP STATION, INTAKE AND DISCHARGE STRUCTURE ($222,504.25)

Design and Engineering

Included in this subtask is the design, engineering, and approval of the Pump Station, Intake and Discharge Structure, electrical infrastructure, and controls. This effort builds on the PDR conclusions which identified the style and basic elements of the structures and their functions and operations. That document was considered to be 35% design of these elements.

Facility control design and engineering include development of process and instrumentation diagrams (P&IDs), sequences of operation, control panel exterior device layout, specification of panel construction requirements, and specification of facility instrumentation devices. Coordination of the interface of this facility with the City's Supervisory Control and Data Acquisition System is also included.

Electrical infrastructure design and engineering includes development, design, and approval of the incoming utility service, electrical distribution equipment, site lighting, and site surveillance. Provisions for connection of a portable and temporary generator, provided outside of this project, are also included.

Structural design and engineering includes the development of plans and specifications for the new Huger Street Pump Station. Based on the report dated May 5, 2020 by JMT, the control structure will consist of approximately 1,000 square feet elevated platform open-air structure with no roof and no exterior walls. The structure will be designed to accommodate a future horizontal expansion for additional pumping equipment.

Design Criteria

The following standards will be used throughout the design process:

- Code of the City of Charleston
- Code of Ordinances - City of Charleston
- International Code Council (ICC) - South Carolina
- ASHRAE 90.1-2007
- National Fire Protection Association (NFPA)
    - NFPA 70-2017 National Electrical Code
    - NFPA 820-2016 Standard for Fire Protection in Wastewater Treatment and Collection Facilities
- Hydraulic Institute Standards – Latest Edition
- International Society of Automation (ISA)
    - ISA 5.1 Instrumentation Symbols and Identification
    - ISA S71.01 Environmental Conditions for Process Measurement and Control Systems: Temperature and Humidity
    - ISA TR20 Specification Forms for Process Measurement and Control Instruments

65 % Design Submission

JMT will perform the following tasks for 65% submission:

General Design and Engineering

A. Perform preliminary layouts and sizing of all structural, electrical elements, control systems, and pump and piping layouts.

B. Prepare draft final pump selection and hydraulic layout for final approval by the CITY. Layout to include 2 submersible pumps capable of discharging flow as per the accepted PDR as amended. Configuration will include shut off and check valves. The station will incorporate expandable elements so ease future expansion of the station.

C. Prepare a draft final plan of the intake and pump structure depicting preliminary layout and details.

D. Technical specifications will be prepared only for major equipment at this phase. Complete outline specifications (Front-end, Division 00, specifications will not be included). Specifications will be developed based on the Construction Specifications Institute (CSI), three-part format.

E. Prepare an Opinion of Probable Construction Cost estimate consistent with the level of the submission.

Control Systems Design and Engineering

F. The CONSULTANT will provide process and instrumentation diagrams of the stormwater pumping system from the intake pond, through the intake structure, and to the termination of the discharge structure. All piping sizes, instrumentation and devices, valves, and equipment will be depicted.

G. The CONSULTANT will size and specify the following control devices, instrumentation, and valves to accommodate the pump station operational sequence. ISA datasheets applicable to the design will be utilized to facilitate communication of device design with the contractor.

    1. Pond level instrumentation including level transmitters and switches.
    2. Pond aerator/fountain system operational and alarm instrumentation. The pond aerator/fountain system is expected to be a packaged assembly which will be integrated with the control system.
    3. Pump status devices exterior to the variable frequency drives.
    4. Automated isolation valves at pump discharge including motorized actuator and associated instrumentation.
    5. Pressure devices including transmitters and gauges.
    6. Electrical and control equipment temperature monitoring devices.
    7. Ventilation and temperature management of control panels will be provided through panel mounted air-conditioning units. The team will investigate a prepackaged electrical and control enclosure which contains air-conditioning equipment which serves all enclosed panels.

H. The CONSULTANT will prepare a control device list and control point input/output list in excel format for indication of control device design intent and communication protocols.

I. The CONSULTANT will establish instrument location, mounting, and elevation in sufficient detail and in the appropriate format to clearly illustrate significant design features of the project. The

Control System Plans will include:

1. Control Device Plan: CONSULTANT will develop typical plans of the pump station identifying physical location of the devices.
2. Control Device Sections/Part Plans: CONSULTANT will develop typical sections and part plans of the pump station, as necessary, to communication mounting heights or special site features important to the bidding of the project relative to controls. Wet well and pond cross sections developed as part of their design will be utilized.
3. Process & Instrumentation Diagrams (P&IDs): CONSULTANT will develop diagrams for flow direction, pipe sizing, and instrumentation layout.
4. Control Detail Sheets: CONSULTANT will develop control device and instrumentation hook-up and installation details.
5. Control Panel Details: CONSULTANT will develop control panel exterior layout elevations.

J. The CONSULTANT will provide design and coordination of connection to and communication with City of Charleston Supervisory Control and Data Acquisition (SCADA) system for remote monitoring.

Electrical Design and Engineering

A. The CONSULTANT will provide the appropriate service request forms to the local electric utility for providing new electric service to the project site.

B. The CONSULTANT will size the following electrical distribution equipment to accommodate the pump station and site loads. The PDR indicated that electrical equipment shall be in outdoor rated enclosures and that equipment with sensitive electronics shall have an independent air conditioning unit. This is the current intent, but JMT will investigate the utilization of a custom air-conditioned enclosure to house all electrical equipment:

1. Manual transfer switch with generator quick connectors.
2. Main switchboard/switchgear.
3. Panelboards.
4. Low-voltage dry-type transformer(s).
5. Variable frequency drives (VFDs).
6. Roll-up temporary generator.
7. Ventilation and temperature management of electrical panels will be provided through panel mounted air-conditioning units. The team will investigate a prepackaged electrical and control enclosure which contains air-conditioning equipment which serves all enclosed panels.

C. CONSULTANT will prepare site plans showing site lighting, surveillance cameras, incoming electric service, and space for Owner provide roll-up temporary generator.

D. CONSULTANT will provide floor plans showing electrical equipment layouts and code clearances, platform lighting and controls, and surveillance cameras.

E. CONSULTANT will provide preliminary site and floor plan lighting photometric plans indicating foot-candle measurements and light pollution at the property lines.

F. CONSULTANT will develop a single line diagram of the electrical system indicating all major pieces of distribution equipment, roll-up temporary generator, VFDs, and associated circuiting.

G. CONSULTANT will provide details and panel schedules commensurate to the level of design.

Structural Design and Engineering

A. CONSULTANT will perform the structural design to conform to the referenced design criteria.
B. CONSULTANT will prepare a plan of the structure depicting preliminary layout and details.
C. 65% structural plans to include:
    1. General Note(s): Showing the title and location of the project along with related data and notes and general plan notes.
    2. Special Inspection(s): Tables showing the special inspection requirements for the project.
    3. Floor Plan: Floor plan showing the layout and sizes of structural elements.
    4. Detail Sheet(s): Illustrating the primary construction and installation details for the proposed structure.

Assumptions:

1) *The CITY to provide one round of written comments after initial submittal.*
2) *One Design Review while 65% plans are under development.*
3) *The CITY will provide a Title Sheet electronically.*
4) *No permits will be applied during 65% Plan development.*
5) *The CITY is responsible for procuring the roll-up temporary generator. CONSULTANT will only provide minimum sizing requirements.*
6) *The CITY will provide SCADA connection requirements and head end programming/graphics creation for remote monitoring. The CONSULTANT will provide design for connection/interface to facility.*
7) *Point-to-point wiring diagrams for panel construction and panel construction design and layout will not be provided by CONSULTANT. Requirements will be prepared in specification format as a delegated design by a UL Listed Panel Shop.*
8) *The CONSULTANT assumes that the project will be completed using Conventional Construction methods.*
9) *Intake and outlet structures will be reinforced concrete design. Foundations will be based on Geotech report prepared as part of this task.*
10) *Access to pump floor and electrical elements will be via an elevated platform. No building is proposed as part of this effort.*
11) *The foundation system will be micro piles.*
12) *Construction will be either open web steel joist or wide flange steel beams.*

Deliverables:

1) *Three (3) full-size sets of plans.*
2) *Two (2) sets of specifications.*
3) Opinion of probable construction cost estimate.
4) *One (1) electronic copy (PDF) of plans, specification, and estimate.*

95% Design Submission

JMT will perform the following tasks for 95% submission:

General Design and Engineering

A. The CONSULTANT will prepare final layouts and sizing of all structural, electrical elements, control systems, and pump and piping layouts.

B. The CONSULTANT will prepare finalize pump selection and hydraulic layout. Layout to include 2 submersible pumps capable of discharging flow as per the accepted PDR as amended. Configuration will include shut off and check valves. The station will incorporate expandable elements so ease future expansion of the station.

C. The CONSULTANT will prepare a final plan of the intake and pump structure depicting preliminary layout and details.

D. The CONSULTANT will provide final structural layout and detail plans including rebar arrangement and connections.

E. The CONSULTANT will prepare an Opinion of Probable Construction Cost Estimate consistent with the level of the submission.

F. The CONSULTANT will further develop the Design Plans consistent with the level of the submission including:

- Title Sheet: Update sheet for final plans.
- 95% Construction Plans will incorporate design changes agreed to after review of the 65% plans and further develop the plans to construction level.
- Signed and sealed Construction Plans shall be provided to the CITY by the CONSULTANT.

G. The CONSULTANT will prepare the specifications book for project letting per CSI, three-part format. Technical Specifications for major equipment will be adjusted based on further design efforts and CITY comments. Specifications will be prepared for remaining required elements. The CITY will provide Division 00 – Procurement sections and an example book from a previous project.

H. The CONSULTANT will respond to all 65% plan review comments provided by the CITY.

I. The CONSULTANT will coordinate building design with the City of Charleston Building Inspections Office for compliance with local codes and ordinances as a building permit application. Any architectural, structural, mechanical, electrical, and plumbing/fuel gas plans, if applicable, will be signed and sealed by licensed design professionals in South Carolina when the application is filed. No more than 2 submittals will be made. JMT will no acquire building permit.

Assumptions:

1) *The CITY to provide one round of written comments after 65% submission review.*
2) *No additional field surveys will be required.*
3) *A waiver for water quality and peak flow rate will be granted or will be addressed with pump station phase.*
4) *The CONSULTANT is only submitting for code review and acceptance of the plans and specifications relative to the permitting process. Contractors will be responsible for final application submission, payment, and pickup of the permit upon award of the construction contract.*

Deliverables:

1) *Three (3) full-size sets of plans.*
2) *Two (2) sets of specifications.*
3) Opinion of probable construction cost estimate.
4) *One (1) electronic copy (PDF) of plans, specification, and estimate.*
5) *Submission of plans and specifications to the City of Charleston building code review office.*

Bid Submission

A. CONSULTANT will provide a Comment / Response to Final Plan Submission.

B. CONSULTANT will address any comments provided by the CITY from the Final Plans Submission.

C. CONSULTANT will address any comments provided by the CITY from the Final Opinion of Probable Construction Cost Estimate.

Assumptions:

1) *The CITY to provide one round of written comments after Construction Plans submittal.*
2) *The CITY will prepare the Project Specification Book.*

Deliverables:

1) *One (1) original full-size set of plans, special provisions, and estimate.*

SUBTASK 5: PERMITTING ($67,597.50)

CIVIL

Per discussions with the CITY, the majority of the project will take place within outside the SCDOT ROW and will require signification coordination and permitting through SCDOT and DHEC. The following outlines the process for civil permitting within the SCDOT ROW as well as the land disturbance permitting required through the CITY for the portions of the project which extend past the ROW.

A. NPDES Permitting:

a. Prepare and submit C-SWPPP to SCDOT

b. Prepare and submit the NOI to DHEC / SCDOT for review.

c. Prepare and submit to SCDHEC OCRM for Coastal Zone Consistency Certification

(CZC).

d. Prepare and submit OS-SWPPP for the Contractor.

e. Two (2) review submissions to the County.

f. Operation and maintenance recording and coordination with SCDOT.

B. SCDOT Encroachment Permit

C. City of Charleston Land Disturbance Permit

a. A small construction activities application is anticipated for this project since the SCDOT ROW

D. City of Charleston TRC Process (or Additional CITY coordination):

a. Prepare and submit TRC application package for CITY review

b. Attend TRC meetings as required

c. Plan revisions to address comments

E. City of Charleston DRC Process:

a. Prepare and submit DRC application package for CITY review

b. Attend DRC meetings as required

c. Plan revisions to address comments

ENVIRONMENTAL

A. Agency approval of wetlands limits

a. Prepare and submit for Critical Area Line Establishment

b. Prepare and submit a Jurisdictional Determination Request (if needed)

B. Regulatory Agency Pre-application Meeting

C. Wetlands Permitting

a. Prepare and submit USACE Nationwide Permit 7 Application

b. Prepare and submit SCDHEC-OCRM Critical Area Permit

i. Prepare a Mitigation credit purchase Plan

Assumptions:

1) *Project will meet the USACE & 401 WQC conditions of NWP 7, including the transition to the 2022 NWP program.*
2) *City provides Affidavit of Ownership.*
3) *City provides property deeds.*
4) *NOAA-NMF, USFWS, SCDNR, SHPO will generally accept the project as proposed.*
5) *No contamination is documented within the proposed area ground disturbing activities.*
6) *Mitigation will be accomplished via credit purchase (direct credit purchase by City).*
1) *$1,500 is included in our fee ($1,000 OCRM CAP fee and $500 budget for newspaper notice). City Pays permitting and public notice fees in excess of these assumptions.*

Deliverables:

1) *Critical Area Line Established, wetlands delineation*
2) *DHEC-OCRM Critical Area Permit & CZC*
3) *USACE Nationwide Permit 7*
4) *NPDES & CZC*

SUBTASK 6: GEOTECHNICAL (SOIL CONSULTANTS, INC. (SCI) & S&ME) ($20,596.96)

The CONSULTANT will perform the following as part of this Task

Geotechnical scope of services includes:

1. SCI will perform seven standard penetration test (SPT) soil borings within the proposed construction areas at the site. Five of the borings would be advanced to depths of approximately 75 feet, and two of the borings would be advanced to depths of approximately 20 feet. Boring depths may be adjusted as appropriate based on soil conditions encountered.

   In accordance with South Carolina state law, SCI will notify SC811 about the proposed drilling so that existing underground public utilities can be located prior to performing the borings. Drilling will be performed using mud-rotary methods, and SPT sampling typically will be performed at 2½-foot intervals from the ground surface to 20 feet and every 5 feet thereafter to the depths of the borings. Portions of the recovered samples will be visually classified in the field and will be returned to our laboratory. After completion of drilling, the boreholes will be backfilled with cuttings generated by drilling operations.

2. Laboratory testing will be performed on samples selected by the SCI to aid in soil classification and to measure engineering properties. Laboratory testing is expected to include moisture content, fines content, Atterberg liquid and plastic limits, and consolidation testing.

3. Using the results of the field and laboratory testing, SCI will perform engineering analyses and issue our engineering report prepared by a professional engineer that will include:
   a. Descriptions of field exploration and engineering analysis
   b. Exploration plan that depicts borehole locations at the site
   c. Soil boring logs with soil classifications based on the Unified Soil Classification System (ASTM D2487)
   d. Laboratory test results
   e. Generalized site stratigraphy developed from field and laboratory data
   f. Seismic analysis in accordance with the International Building Code (2018 Edition), including site classification, seismic design parameters (general procedure), identification of potentially liquefiable soils, and estimation of liquefaction-induced settlement
   g. Recommendations for shallow foundations and/or deep foundations, as appropriate, including allowable bearing pressure and foundation depth for shallow foundations and bearing capacity and recommended embedment depths (up to two different pile types/sizes) for deep foundations
   h. Recommendations for pipeline support
   i. Lateral pile analysis using the LPILE 2019 software program
   j. General recommendations for site preparation, excavations, and backfill

4. S&ME will Provide environmental-related opinions and recommendations regarding specific stormwater pump station discharge pipe construction techniques where the planned pipe crosses

the Lowcountry Lowline transportation corridor. S&ME is currently performing a soil and groundwater assessment of the planned Lowcountry Lowline transportation corridor for the City of Charleston. The Lowcountry Lowline corridor is a former Norfolk Southern railroad located between King and Meeting Streets. At this time, pipe installation construction techniques being considered include open cut and directional boring. S&ME will use the assessment data collected on the Lowcountry Lowline corridor and construction technique information provided by the design team to formulate opinions and recommendations.

Assumptions:

1) *We assume soil boring locations would be accessible using our standard drilling equipment.*
2) *We assume there are no private underground utilities that would not be marked by SC811 within the area of the proposed structures and piping.*
3) *We assume that soils are not contaminated and that only standard personal protective equipment including hard hats, safety toe boots, safety glasses, and gloves will be required to perform the requested work.*
4) *We assume that soil cuttings can be disposed of at the ground surface adjacent to the boring locations and that boreholes do not require grouting to prevent vertical migration of contaminated soils.*
5) *We assume that seismic design parameters can be determined using the general procedure discussed in the IBC and that a Site-Specific Seismic Analysis will not be required for this project. Additional fees would apply if a Site-Specific Seismic Analysis is required*
6) *Deep foundations are not required for the force main piping.*

Deliverables:

1) *Geotechnical Engineering Analysis & Report including foundation design and recommendations.*

SUBTASK 7: PRELIMINARY NOISE ANALYSIS ($3,048.84)

The CONSULTANT will perform the following task

HUD Noise Abatement and Control

1. CONSULTANT will perform a Housing of Urban Development (HUD) Noise Abatement and Control study for new construction of a pump station on an easement located on the William Enston Homes property owned by the Housing Authority of the City of Charleston. HUD noise standards may be found in 24 CFR Part 51, Subpart B. For proposed new construction in high noise areas, the project must incorporate noise mitigation features.
2. Sites who's environmental or community noise exposure exceeds the day night average (DNL) of 65 decibels (dB) are considered noise-impacted areas. For new construction that is proposed in high noise areas, grantees shall incorporate noise attenuation features to the extent required by HUD environmental criteria and standards contained in Subpart B (Noise Abatement and Control) of 24 CFR Part 51. The interior standard is 45 dB.
3. CONSULTANT will identify potential noise generators in the vicinity of the project, which include a review of general location maps and/or conduct a field review to screen for major roadways (within 1,000 fee), railroads (within 3,000 feet) and military or FAA-regulated airfields (within 15 miles) in the vicinity of the project. Once a site DNL has been determined by the CONSULTANT, noise levels from proposed submersible pumps and onsite generators will be incorporated into the over site noise levels.

Assumptions:

1) *If the analysis using the HUD defined process and calculator yields results that create an unfavorable noise condition, further study, and measurement of noise levels in the field may be required and would constitute a change order.*
2) *Manufacturers will provide estimated noise levels (dB) for submersible pumps and onsite generators.*
3) *Noise levels generate from nearby roadways, railroad, and airfields, combined with those provided by the manufacturers will not exceed the 65 dB.*
4) *Any additional surveys required that are outside what can be found in the HUD Noise Guidebook or applied to the HUD Day/Night Noise Level Electronic Assessment Tool (DNL Calculator).*
5) *HUD Barrier Performance Module is excluded due to considerations that the model is only used when the noise levels exceed 65 dB, which is outside of this scope.*

Deliverables:

1) *Memorandum discussing results of noise analysis; including mathematical equations showing how the dB was derived and the DNL Noise Calculator results.*

SUBTASK 8: CONSTRUCTION SUPPORT ($10,717.05)

A. CONSULTANT will assist the CITY during the Bidding Phase including:
   - Attend Pre-Bid Conference
   - Respond to Contractor questions. Contractor questions will be reviewed for compliance
   - with the intent of plans, specifications, and contract provisions. JMT will provide a letter of recommendation and/or comments as appropriate to the CITY.

REIMBURSABLE COSTS ($3,794.00)

These costs include printing, mileage, parking, meals and lodging in addition to the specific items below:
Wetland Permitting Fees: $1,500
Notice of Intent (NOI) Submission Fee: $250

Assumptions:

1) *Reimbursables do not cover wetland mitigation, or other environmental impact, fees, if required.*

TASK 6: General Consulting Services (Not to Exceed $25,000)

Per discussions with the City, this task has been added to address scope changes which may arise during design or construction of the intersection improvements related to this pump station. Fees and Rates will be agreed upon should the need for these services arise. This task is only to be used as authorized by the City should the need arise.

CPR COMMITTEE and/or COUNCIL AGENDA

TO: John J. Tecklenburg, Mayor

FROM: Benjie Smith / Andrew Jones **DEPT.** Stormwater Management

SUBJECT: WINDERMERE NEIGHBORHOOD DRAINAGE IMPROVEMENT PROJECT – PHASE 1 PROFESSIONAL SERVICES CONTRACT

REQUEST: Approval of a Professional Services Agreement with Thomas & Hutton Engineering Co. in the amount of $119,600.00 for the conceptual design phase of the project which will include a study, conceptual design of phase 1 (conceptual layout and opinion of probably cost), and project management & coordination.

COMMITTEE OF COUNCIL: Ways & Means **DATE:** September 8, 2020

COORDINATION: This request has been coordinated with: *(attach all recommendations/reviews)*

	Yes	N/A	Signature of Individual Contacted	Attachment
CPR Committee Chair	☐	☐	Amy Wharton	☐
Corporate Counsel	☐	☐		☐
Dir. of SW Management	☒	☐		☐
MBE Manager	☐	☐		☐

FUNDING: Was funding previously approved? Yes ☒ No ☐ N/A ☐

If yes, provide the following: Dept/Div SW Mgmt-Proj. Mgmt Acct # 050372-58238

Balance in Account $119,600.00 Amount needed for this item $119,600.00

NEED: Identify any critical time constraint(s).

CFO's Signature: Amy Wharton

FISCAL IMPACT: This Professional Services Contract will obligate $119,600.00 of the project budget. Funding for this project is coming from the Drainage Fund.

Mayor's Signature: John J. Tecklenburg, Mayor

ORIGINATING OFFICE PLEASE NOTE: A FULLY STAFFED/APPROVED (except Mayor's Signature) PACKAGE IS DUE IN THE CLERK OF COUNCIL'S OFFICE NO LATER THAN 10:00 A.M THE DAY OF THE CLERK'S AGENDA MEETING.

STATE OF SOUTH CAROLINA)
)
COUNTY OF CHARLESTON)

AGREEMENT BETWEEN OWNER AND ENGINEER FOR PROFESSIONAL SERVICES

THIS AGREEMENT effective as of _____, _____ or the date when this Agreement has been signed by all parties, whichever date is later ("Effective Date") is between the City of Charleston ("OWNER") and Thomas & Hutton Engineering Co. ("ENGINEER"). OWNER intends to retain the ENGINEER to plan, design, and construct Phase 1 of the Windermere Neighborhood Drainage Improvement Project. It is anticipated that Phase 1 will include the study and recommendation for improvements to the existing outfall and/or a new outfall system. The Engineer shall prepare construction documents with plans and specifications as more fully defined in the Exhibit H the Scope of Services.

OWNER and ENGINEER in consideration of their mutual covenants as set forth herein agree as follows:

ARTICLE 1 - SERVICES OF ENGINEER

1.01 Scope

A. ENGINEER shall provide the Basic and Additional Services set forth herein and in Exhibit A.

B. Upon this Agreement becoming effective, ENGINEER is authorized to begin Basic Services as set forth in Exhibit A.

ARTICLE 2 - OWNER'S RESPONSIBILITIES

2.01 General

A. OWNER shall have the responsibilities set forth herein and in Exhibit B.

ARTICLE 3 - TIMES FOR RENDERING SERVICES

3.01 General

A. ENGINEER's services and compensation under this Agreement have been agreed to in anticipation of the orderly and continuous progress of the Project through completion. Unless specific periods of time or specific dates for providing services are specified in this Agreement, ENGINEER's obligation to render services hereunder will be for a period which may reasonably be required for the completion of said services.

B. If in this Agreement specific periods of time for rendering services are set forth or specific dates by which services are to be completed are provided, and if such periods of time or dates are changed through no fault of ENGINEER, the rates and amounts of compensation provided for herein may be subject to equitable adjustment as agreed upon by OWNER and ENGINEER. If OWNER has requested changes in the scope, extent, or character of the Project, the time of performance of ENGINEER's services may be adjusted equitably as agreed upon by OWNER and ENGINEER.

C. For purposes of this Agreement the term "day" means a calendar day of 24 hours.

3.02 Suspension

A. If OWNER fails to give prompt written authorization to proceed with any phase of services after completion of the immediately preceding phase, or if ENGINEER's services are delayed through no fault of ENGINEER, ENGINEER may, after giving thirty days written notice to OWNER, suspend services under this Agreement.

B. If ENGINEER's services are delayed or suspended in whole or in part by OWNER, or if ENGINEER's services are extended by Contractor's actions or inactions for more than 90 days through no fault of ENGINEER, ENGINEER shall be entitled to equitable adjustment of rates and amounts of compensation provided for elsewhere in this Agreement to reflect, reasonable costs incurred by ENGINEER in connection with, among other things, such delay or suspension and reactivation and the fact that the time for performance under this Agreement has been revised.

ARTICLE 4 - PAYMENTS TO ENGINEER

4.01 Methods of Payment for Services and Reimbursable Expenses of ENGINEER

A. *For Basic Services*. OWNER shall pay ENGINEER for Basic Services performed or furnished under Exhibit A, Part 1, as set forth in Exhibit C.

B. *For Additional Services*. OWNER shall pay ENGINEER for Additional Services performed or furnished under Exhibit A, Part 2, as set forth in Exhibit C.

C. *For Reimbursable Expenses*. In addition to payments provided for in paragraphs 4.01.A and 4.01.B, OWNER shall pay ENGINEER for Reimbursable Expenses incurred by ENGINEER and ENGINEER's Consultants as set forth in Exhibit C.

4.02 Other Provisions Concerning Payments

A. *Preparation of Invoices*. Invoices will be prepared in accordance with ENGINEER's standard invoicing practices and will be submitted to OWNER by ENGINEER, unless otherwise agreed. The amount billed in each invoice will be calculated as set forth in Exhibit C.

B. *Payment of Invoices*. Invoices are due and payable within 30 days of receipt of an invoice approved by the City. If OWNER fails to make any payment due ENGINEER for services and expenses within 30 days after receipt of ENGINEER's approved invoice therefor, the amounts due ENGINEER will be increased at the rate of 1.0% per month (or the maximum rate of interest permitted by law, if less) from said thirtieth day. Payments will be credited first to interest and then to principal. In addition, ENGINEER may, after giving thirty days written notice to OWNER, suspend services under this Agreement until ENGINEER has been paid in full all amounts due for services, expenses, and other related charges.

C. *Disputed Invoices*. In the event of a disputed or contested invoice, only that portion so contested may be withheld from payment, and the undisputed portion will be paid. No interest shall accrue on the disputed or contested amounts of the invoice that are withheld from payment.

D. *Payments Upon Termination*.

1. In the event of any termination under paragraph 6.05, ENGINEER will be entitled to invoice OWNER and will be paid in accordance with Exhibit C for all services performed or furnished and all Reimbursable Expenses incurred through the effective date of termination.

2. Termination for convenience by OWNER as per paragraph 6.06: OWNER reserves the right to terminate this Contract when it is in the best interests of OWNER, including but not limited to the non-appropriation of funds. If the Contract is so terminated, OWNER shall provide the ENGINEER with thirty (30) days written notice. Neither OWNER nor ENGINEER shall be entitled to any costs or damages resulting from termination under this section.

3. Termination for default of ENGINEER by OWNER as per paragraph 6.06: If the ENGINEER fails to comply with the terms of the Contract, OWNER shall notify the ENGINEER in writing with the specifics regarding such noncompliance. If the ENGINEER fails to cure the noncompliance within fifteen (15) days of the notice, OWNER shall terminate this Contract by written notice to the ENGINEER within thirty (30) days thereafter. ENGINEER shall not be entitled to any costs or damages resulting from termination under this section.

E. *Records of ENGINEER's Costs*. Records of ENGINEER's costs pertinent to ENGINEER's compensation under this Agreement shall be kept for three years from the date of final completion. To the extent necessary to verify ENGINEER's charges and upon OWNER's timely request, copies of such records will be made available to OWNER at cost.

ARTICLE 5 - OPINIONS OF COST

5.01 Opinions of Probable Construction Cost

A. ENGINEER's opinions of probable Construction Cost provided for herein are to be made on the basis of ENGINEER's experience and qualifications and represent ENGINEER's best judgment as an experienced and qualified professional generally familiar with the industry. However, since ENGINEER has no control over the cost of labor, materials, equipment, or services furnished by others, or over the Contractor's methods of determining prices, or over competitive bidding or market conditions, ENGINEER cannot and does not guarantee that proposals, bids, or actual Construction Cost will not vary from opinions of probable Construction Cost prepared by ENGINEER. If OWNER wishes greater assurance as to probable Construction Cost, OWNER shall employ an independent cost estimator as provided in Exhibit B.

5.02 Opinions of Total Project Costs

A. If the lowest bona fide proposal or bid exceeds the final opinion of probable construction cost by more than 10%, the ENGINEER shall without additional charge to the OWNER, cooperate in revising the Project's scope, extent, or character to the extent consistent with the Project's requirements and with sound engineering practices. Engineer shall modify the Contract Documents as necessary to bring the Construction Cost within 10% of the final opinion of probable cost. The ENGINEER's responsibility shall also include negotiation with the lowest bonafide proposer or bidder and reprinting costs associated with the effort.

ARTICLE 6 - GENERAL CONSIDERATIONS

6.01 Standards of Performance

A. The standard of care for all professional engineering and related services performed or furnished by ENGINEER under this Agreement will be the care and skill ordinarily used by members of ENGINEER's profession practicing under similar circumstances at the same time and in the same locality.

B. ENGINEER shall be responsible for the technical accuracy of its services and documents resulting therefrom, and OWNER shall not be responsible for discovering deficiencies therein. ENGINEER shall correct such deficiencies without additional compensation except to the extent such action is directly attributable to deficiencies in OWNER-furnished information.

C. ENGINEER shall perform or furnish professional engineering and related services in all phases of the Project to which this Agreement applies. ENGINEER shall serve as OWNER's prime professional for the Project. ENGINEER may employ such ENGINEER's Consultants as ENGINEER deems necessary to assist in the performance or furnishing of the services. ENGINEER shall not be required to employ any ENGINEER's Consultant unacceptable to ENGINEER or OWNER.

D. ENGINEER and OWNER shall comply with applicable Laws and Regulations and OWNER-mandated standards. This Agreement is based on these requirements as of its Effective Date. Changes to these requirements after the Effective Date of this Agreement may be the basis for modifications to OWNER's responsibilities or to ENGINEER's scope of services, times of performance, or compensation.

E. OWNER shall be responsible for, and ENGINEER may rely upon, the accuracy and completeness of all requirements, programs, instructions, reports, data, and other information furnished by OWNER to ENGINEER pursuant to this Agreement. ENGINEER may use such requirements, reports, data, and information in performing or furnishing services under this Agreement.

F. OWNER shall make decisions and carry out its other responsibilities in a timely manner and shall bear reasonable costs incident thereto so as not to unreasonably delay the services of ENGINEER unless such decisions or other responsibilities are the responsibility of the ENGINEER, in which case, such costs incident thereto shall be the responsibility of the ENGINEER.

G. Prior to the commencement of the Construction Phase, OWNER shall notify ENGINEER of any variations from the language indicated in Exhibit E, "Notice of Acceptability of Work," or of any other notice or certification that ENGINEER will be requested to provide to OWNER or third parties in connection with the Project. OWNER and ENGINEER shall reach agreement on the terms of any such requested notice or certification, and OWNER shall authorize such Additional Services as are necessary to enable ENGINEER to provide the notices or certifications requested.

H. ENGINEER shall not be required to sign any documents, no matter by whom requested, that would result in the ENGINEER's having to certify, guarantee or warrant the existence of conditions whose existence the ENGINEER cannot ascertain. OWNER agrees not to make resolution of any dispute with the ENGINEER or payment of any amount due to the ENGINEER in any way contingent upon the ENGINEER's signing any such certification.

I. During the Construction Phase, ENGINEER shall not supervise, direct, or have control over Contractor's work, nor shall ENGINEER have authority over or responsibility for the means, methods, techniques, sequences, or procedures of construction selected by Contractor, for safety precautions and programs incident to the Contractor's work in progress, nor for any failure of Contractor to comply with Laws and Regulations applicable to Contractor's furnishing and performing the Work. Notwithstanding the foregoing, if ENGINEER becomes aware that the Contractor is failing to perform its responsibilities, ENGINEER shall promptly notify OWNER of such failure by the Contractor.

J. ENGINEER neither guarantees the performance of any Contractor nor assumes responsibility for any Contractor's failure to furnish and perform the Work in accordance with the Contract Documents. Notwithstanding the foregoing, if ENGINEER becomes aware that the Contractor is failing to furnish and perform the Work in accordance with the Contract Documents, ENGINEER shall promptly notify OWNER of such failure by the Contractor.

K. ENGINEER shall not be responsible for the acts or omissions of any Contractor(s), subcontractor or supplier, or of any of the Contractor's agents or employees or any other persons (except ENGINEER's own employees) at the Site or otherwise furnishing or performing any of the Contractor's work; or for any decision made on interpretations or clarifications of the Contract Documents given by OWNER without consultation and advice of ENGINEER and OWNER.

6.02 Authorized Project Representatives

A. Contemporaneous with the execution of this Agreement, ENGINEER and OWNER shall designate specific individuals to act as ENGINEER's and OWNER's representatives with respect to the services to be performed or furnished by ENGINEER and responsibilities of OWNER under this Agreement. To the extent permitted by law, such individuals shall have authority to transmit instructions, receive information, and render decisions relative to the Project on behalf of each respective party.

6.03 Design Without Construction Phase Services

A. Should OWNER provide Construction Phase services with either OWNER's representatives or a third party, ENGINEER's Basic Services under this Agreement will be limited to those outlined in this Contract, as amended.

B. It is understood and agreed that if ENGINEER's Basic Services under this Agreement do not include Project observation, or review of the Contractor's performance, or any other Construction Phase services, and that such services will be provided by OWNER, then OWNER assumes all responsibility for interpretation of the Contract Documents and for construction observation and waives any claims against the ENGINEER that may be in any way connected to the interpretation of the Contract Documents and for construction observation.

6.04 Use of Documents

A. All Documents are instruments of service with respect to the Project, and upon payment therefor, OWNER shall retain an ownership and property interest therein whether or not the Project is completed. Owner shall not rely in any way on any Document unless it is in printed form, signed or sealed by the Engineer or one of its Consultants.

B. Either party to this Agreement may rely that data or information set forth on paper (also known as hard copies) that the party receives from the other party by mail, hand delivery, or facsimile, are the items that the other party intended to send. Files in electronic media format of text, data, graphics, or other types that are furnished by one party to the other are furnished only for convenience, not reliance by the receiving party. Any conclusion or information obtained or derived from such electronic files will be at the user's sole risk. If there is a discrepancy between the electronic files and the hard copies, the hard copies govern.

C. Copies of OWNER-furnished data that may be relied upon by ENGINEER are limited to the printed copies (also known as hard copies) that are delivered to the ENGINEER pursuant to Exhibit B. Files in electronic media format of text, data, graphics, or of other types that are furnished by OWNER to ENGINEER are only for convenience of ENGINEER. Any conclusion or information obtained or derived from such electronic files will be at the user's sole risk.

D. Because data stored in electronic media format can deteriorate or be modified inadvertently or otherwise without authorization of the data's creator, the party receiving electronic files agrees that it will perform acceptance tests or procedures within 60 days, after which the receiving party shall be deemed to have accepted the data thus transferred. Any errors detected within the 60-day acceptance period will be corrected by the party delivering the electronic files. ENGINEER shall be responsible to maintain documents stored in electronic media format after acceptance by OWNER for a period of three years from the date of Owner's acceptance.

E. OWNER may make and retain copies of Documents for information and reference in connection with use on the Project by OWNER.

F. If there is a discrepancy between the electronic files and the hard copies, the hard copies govern.

6.05 Insurance

A. ENGINEER shall procure and maintain insurance as set forth in Exhibit G, "Insurance." ENGINEER shall cause Engineering Consultants to procure and maintain like insurance as set forth in Exhibit G, "Insurance".

B. ENGINEER shall deliver to the OWNER certificates of insurance evidencing the coverages indicated in Exhibit G. Such certificates shall be furnished prior to commencement of ENGINEER's services and at renewals thereafter during the life of the Agreement.

C. At any time, OWNER may request that ENGINEER provide additional insurance coverage, increased limits, or revised deductibles that are more protective than those specified in Exhibit G. If so requested by OWNER, ENGINEER shall obtain and shall require ENGINEER's Consultants to obtain such additional insurance coverage, different limits, or revised deductibles for such periods of time as requested by OWNER, and Exhibit G will be supplemented to incorporate these requirements.

6.06 Termination

A. The obligation to provide further services under this Agreement may be terminated:

1. *For cause,*

a. By either party upon 30 days written notice in the event of substantial failure by the other party to perform in accordance with the terms hereof through no fault of the terminating party.

b. By ENGINEER or OWNER:

1) upon seven days written notice if ENGINEER or OWNER believes that ENGINEER/OWNER is being requested by the other party to furnish or perform services contrary to the other party's responsibilities pursuant to this Agreement; or

2) upon seven days written notice if the ENGINEER's services or OWNER'S responsibilities for the Project are delayed or suspended for more than 90 days for reasons beyond the other party's control.

3) ENGINEER and OWNER shall have no liability to the other party on account of such termination.

c. Notwithstanding the foregoing, this Agreement will not terminate as a result of such substantial failure if the party receiving such notice begins, within seven days of receipt of such notice, to correct its failure to perform and proceeds diligently to cure such failure within no more than 30 days of receipt thereof; provided, however, that if and to the extent such substantial failure cannot be reasonably cured within such 30 day period, and if such party has diligently attempted to cure the same and thereafter continues diligently to cure the same, then the cure period provided for herein shall extend up to, but in no case more than, 60 days after the date of receipt of the notice.

2. *For convenience,*

a. By OWNER effective upon the receipt of notice by ENGINEER or by ENGINEER effective upon the receipt of notice by the Owner.

B. The terminating party under paragraphs 6.05.A.1 or 6.05.A.2 may set the effective date of termination at a time up to 30 days later than otherwise provided to complete tasks whose value would otherwise be lost, to prepare notes as to the status of completed and uncompleted tasks, and to assemble Project materials in orderly files.

6.07 Controlling Law

A. This Agreement is to be governed by the laws of the State of South Carolina with venue lying in Charleston County Court of Common Pleas.

6.08 Successors, Assigns, and Beneficiaries

A. OWNER and ENGINEER each is hereby bound and the partners, successors, executors, administrators and legal representatives of OWNER and ENGINEER (and to the extent permitted by paragraph 6.08.B the assigns of OWNER and ENGINEER) are hereby bound to the other party to this Agreement and to the partners, successors, executors, administrators and legal representatives (and said assigns) of such other party, in respect of all covenants, agreements and obligations of this Agreement.

B. Neither OWNER nor ENGINEER may assign, sublet, or transfer any rights under or interest (including, but without limitation, moneys that are due or may become due) in this Agreement without the written consent of the other, except to the extent that any assignment, subletting, or transfer is mandated or restricted by law. Unless specifically stated to the contrary in any written consent to an assignment, no assignment will release or discharge the assignor from any duty or responsibility under this Agreement.

C. Unless expressly provided otherwise in this Agreement:

1. Nothing in this Agreement shall be construed to create, impose, or give rise to any duty owed by OWNER or ENGINEER to any Contractor, Contractor's subcontractor, supplier, other individual or entity, or to any surety for or employee of any of them.

2. All duties and responsibilities undertaken pursuant to this Agreement will be for the sole and exclusive benefit of OWNER and ENGINEER and not for the benefit of any other party. The OWNER agrees that the substance of the provisions of this paragraph 6.08.C may appear, if inserted by the ENGINEER, in future Construction Contract Documents.

6.09 Dispute Resolution

A. OWNER and ENGINEER agree to negotiate all disputes between them in good faith for a period of 30 days from the date of notice of a dispute prior to exercising their rights under this Agreement or under law.

6.10 Hazardous Environmental Condition

A. OWNER represents to Engineer that to the best of its knowledge a Hazardous Environmental Condition does not exist.

B. OWNER has disclosed to the best of its knowledge to ENGINEER the existence of all Asbestos, PCB's, Petroleum, Hazardous Waste, or Radioactive Material located at or near the Site, including type, quantity and location.

C. If a Hazardous Environmental Condition is encountered or alleged, ENGINEER shall have the obligation to notify OWNER and, to the extent of applicable Laws and Regulations, appropriate governmental officials.

D. It is acknowledged by both parties that ENGINEER's scope of services does not include any services related to a Hazardous Environmental Condition. In the event ENGINEER or any other party encounters a Hazardous Environmental Condition, ENGINEER may, at its option and without liability for consequential or any other damages, suspend performance of services on the portion of the Project affected thereby until OWNER: (i) retains appropriate specialist consultant(s) or contractor(s) to identify and, as appropriate, abate, remediate, or remove the Hazardous Environmental Condition; and (ii) warrants that the Site is in full compliance with applicable Laws and Regulations.

E. OWNER acknowledges that ENGINEER is performing professional services for OWNER and that ENGINEER is not and shall not be required to become an "arranger," "operator," "generator," or "transporter" of hazardous substances, as defined in the Comprehensive Environmental Response, Compensation, and Liability Act of 1990 (CERCLA), which are or may be encountered at or near the Site in connection with ENGINEER's activities under this Agreement.

6.11 Allocation of Risks

A. Indemnification

1. To the fullest extent permitted by law, ENGINEER shall indemnify and hold harmless OWNER, OWNER's officers, directors, partners, and employees from and against any and all costs, losses, and damages (including but not limited to all fees and charges of engineers, architects, attorneys, and other professionals, and all court or arbitration or other dispute resolution costs) to the extent caused by the negligent acts or omissions of ENGINEER or ENGINEER's officers, directors, partners, employees, and ENGINEER's Consultants in the performance and furnishing of ENGINEER's services under this Agreement.

6.12 Notices

A. Any notice required under this Agreement will be in writing, addressed to the appropriate party at its address on the signature page and given personally, or by registered or certified mail postage prepaid, or by a commercial courier service. All notices shall be effective upon the date of receipt.

6.13 Survival

A. All express representations, indemnifications, or limitations of liability included in this Agreement will survive its completion or termination for any reason.

6.14 Severability

A. Any provision or part of the Agreement held to be void or unenforceable under any Laws or Regulations shall be deemed stricken, and all remaining provisions shall continue to be valid and binding upon OWNER and ENGINEER, who agree that the Agreement shall be reformed to replace such stricken provision or part thereof with a valid and enforceable provision that comes as close as possible to expressing the intention of the stricken provision to the extent possible.

6.15 Waiver

A. Non-enforcement of any provision by either party shall not constitute a waiver of that provision, nor shall it affect the enforceability of that provision or of the remainder of this Agreement.

6.16 Headings

A. The headings used in this Agreement are for general reference only and do not have special significance.

ARTICLE 7 - DEFINITIONS

7.01 Defined Terms

A. Wherever used in this Agreement (including the Exhibits hereto) and printed with initial or all capital letters, the terms listed below have the meanings indicated, which are applicable to both the singular and plural thereof:

1. *Addenda*--Written or graphic instruments issued prior to the opening of Bids which clarify, correct, or change the Bidding Documents.

2. *Additional Services*--The services to be performed for or furnished to OWNER by ENGINEER in accordance with Exhibit A, Part 2 of this Agreement.

3. *Agreement*--This "Standard Form of Agreement between OWNER and ENGINEER for Professional Services," including those Exhibits listed in Article 8 hereof.

4. *Application* for Payment--The form acceptable to ENGINEER which is to be used by Contractor in requesting progress or final payments for the completion of its Work and which is to be accompanied by such supporting documentation as is required by the Contract Documents.

5. *Asbestos*--Any material that contains more than one percent asbestos and is friable or is releasing asbestos fibers into the air above current action levels established by the United States Occupational Safety and Health Administration.

6. *Basic Services*--The services to be performed for or furnished to OWNER by ENGINEER in accordance with Exhibit A, Part 1, of this Agreement.

7. *Bid*--The offer or proposal of the bidder(s) submitted on the prescribed form setting forth the prices for the Work to be performed.

8. *Bidding Documents*--The advertisement or invitation to Bid, instructions to bidders, the Bid form and attachments, the Bid bond, if any, the proposed Contract Documents, and all Addenda, if any.

9. *Change Order*--A document recommended by ENGINEER, which is signed by Contractor and OWNER to authorize an addition, deletion or revision in the Work, or an adjustment in the Contract Price or the Contract Times, issued on or after the Effective Date of the Construction Agreement.

10. *Construction Agreement*--The written instrument which is evidence of the agreement, contained in the Contract Documents, between OWNER and Contractor covering the Work.

11. *Construction Contract*--The entire and integrated written agreement between the OWNER and Contractor concerning the Work.

12. *Construction Cost*--The cost to OWNER of those portions of the entire Project designed or specified by ENGINEER. Construction Cost does not include costs of services of ENGINEER or other design professionals and consultants, cost of land, rights-of-way, or compensation for damages to properties, or OWNER's costs for legal, accounting, insurance counseling or auditing services, or interest and financing charges incurred in connection with the

Project, or the cost of other services to be provided by others to OWNER pursuant to Exhibit B of this Agreement. Construction Cost is one of the items comprising Total Project Costs.

13. *Contract Documents*--Documents that establish the rights and obligations of the parties engaged in construction and include the Construction Agreement between OWNER and Contractor, Addenda (which pertain to the Contract Documents), Contractor's Bid (including documentation accompanying the Bid and any post-Bid documentation submitted prior to the notice of award) when attached as an exhibit to the Construction Agreement, the notice to proceed, the bonds, appropriate certifications, the General Conditions, the Supplementary Conditions, the Specifications and the Drawings as the same are more specifically identified in the Construction Agreement, together with all Written Amendments, Change Orders, Work Change Directives, Field Orders, and ENGINEER's written interpretations and clarifications issued on or after the Effective Date of the Construction Agreement. Approved Shop Drawings and the reports and drawings of subsurface and physical conditions are not Contract Documents.

14. *Contract Price*--The moneys payable by OWNER to Contractor for completion of the Work in accordance with the Contract Documents and as stated in the Construction Agreement.

15. *Contract Times*--The numbers of days or the dates stated in the Construction Agreement to: (i) achieve Substantial Completion, and (ii) complete the Work so that it is ready for final payment as evidenced by ENGINEER's written recommendation of final payment.

16. *Contractor*--An individual or entity with whom OWNER enters into a Construction Agreement.

17. *Correction Period*--The time after Substantial Completion during which Contractor must correct, at no cost to OWNER, any Defective Work, normally one year after the date of Substantial Completion or such longer period of time as may be prescribed by Laws or Regulations or by the terms of any applicable special guarantee or specific provision of the Contract Documents.

18. *Defective*--An adjective which, when modifying the word Work, refers to Work that is unsatisfactory, faulty, or deficient, in that it does not conform to the Contract Documents, or does not meet the requirements of any inspection, reference standard, test, or approval referred to in the Contract Documents, or has been damaged prior to ENGINEER's recommendation of final payment.

19. *Documents*--Data, reports, Drawings, Specifications, Record Drawings, and other deliverables, whether in printed or electronic media format, provided or furnished in appropriate phases by ENGINEER to OWNER pursuant to this Agreement.

20. *Drawings*--That part of the Contract Documents prepared or approved by ENGINEER which graphically shows the scope, extent, and character of the Work to be performed by Contractor. Shop Drawings are not Drawings as so defined.

21. *Effective Date of the Construction Agreement*--The date indicated in the Construction Agreement on which it becomes effective, but if no such date is indicated, it means the date on which the Construction Agreement is signed and delivered by the last of the two parties to sign and deliver.

22. *Effective Date of the Agreement*--The date indicated in this Agreement on which it becomes effective, but if no such date is indicated, it means the date on which the Agreement is signed and delivered by the last of the two parties to sign and deliver.

23. *ENGINEER's Consultants*--Individuals or entities having a contract with ENGINEER to furnish services with respect to this Project as ENGINEER's independent professional associates, consultants, subcontractors, or vendors. The term ENGINEER includes ENGINEER's Consultants.

24. *Field Order*--A written order issued by ENGINEER which directs minor changes in the Work but which does not involve a change in the Contract Price or the Contract Times.

25. *General Conditions*-That part of the Contract Documents which sets forth terms, conditions, and procedures that govern the Work to be performed or furnished by Contractor with respect to the Project.

26. *Hazardous Environmental Condition*--The presence at the Site of Asbestos, PCB's, Petroleum, Hazardous Waste, or Radioactive Materials in such quantities or circumstances that present a substantial danger to persons or property exposed thereto in connection with the Work.

27. *Hazardous Waste*--The term Hazardous Waste shall have the meaning provided in Section 1004 of the Solid Waste Disposal Act (42 USC Section 6903) as amended from time to time.

28. *Laws and Regulations; Laws or Regulations*--Any and all applicable laws, rules, regulations, ordinances, codes, standards, and orders of any and all governmental bodies, agencies, authorities, and courts having jurisdiction.

29. PCB's--Polychlorinated biphenyls.

30. *Petroleum*--Petroleum, including crude oil or any fraction thereof which is liquid at standard conditions of temperature and pressure (60 degrees Fahrenheit and 14.7 pounds per square inch absolute), such as oil, petroleum, fuel oil, oil sludge, oil refuse, gasoline, kerosene, and oil mixed with other non-Hazardous Waste and crude oils.

31. *Radioactive Materials*--Source, special nuclear, or byproduct material as defined by the Atomic Energy Act of 1954 (42 USC Section 2011 et seq.) as amended from time to time.

32. *Record Drawings*--The Drawings as issued for construction on which the ENGINEER, upon completion of the Work, has shown changes due to Addenda or Change Orders and other information which ENGINEER considers significant based on record documents furnished by Contractor to ENGINEER and which were annotated by Contractor to show changes made during construction.

33. *Reimbursable Expenses*--The expenses incurred directly by ENGINEER in connection with the performing or furnishing of Basic and Additional Services for the Project for which OWNER shall pay ENGINEER as indicated in Exhibit C.

34. *Resident Project Representative*--The authorized representative of ENGINEER, if any, assigned to assist ENGINEER at the Site during the Construction Phase. The Resident Project Representative will be ENGINEER's agent or employee and under ENGINEER's supervision. As used herein, the term Resident Project Representative includes any assistants of Resident Project Representative agreed to by OWNER.

35. *Samples*--Physical examples of materials, equipment, or workmanship that are representative of some portion of the Work and which establish the standards by which such portion of the Work will be judged.

36. *Shop Drawings*--All drawings, diagrams, illustrations, schedules, and other data or information which are specifically prepared or assembled by or for Contractor and submitted by Contractor to ENGINEER to illustrate some portion of the Work.

37. *Site*--Lands or areas indicated in the Contract Documents as being furnished by OWNER upon which the Work is to be performed, rights-of-way and easements for access thereto, and such other lands furnished by OWNER which are designated for use of Contractor.

38. *Specifications*--That part of the Contract Documents consisting of written technical descriptions of materials, equipment, systems, standards, and workmanship as applied to the Work and certain administrative details applicable thereto.

39. *Substantial Completion*--The time at which the Work (or a specified part thereof) has progressed to the point where, in the opinion of ENGINEER, the Work (or a specified part thereof) is sufficiently complete, in accordance with the Contract Documents, so that the Work (or a specified part thereof) can be utilized for the purposes for which it is intended. The terms "substantially complete" and "substantially completed" as applied to all or part of the Work refer to Substantial Completion thereof.

40. Supplementary Conditions--That part of the Contract Documents which amends or supplements the General Conditions.

41. Total Project Costs--The sum of the Construction Cost, allowances for contingencies, the total costs of services of ENGINEER or other design professionals and consultants, cost of land, rights-of-way, or compensation for damages to properties, or OWNER's costs for legal, accounting, insurance counseling or auditing services, or interest and financing charges incurred in connection with the Project, or the cost of other services to be provided by others to OWNER pursuant to Exhibit B of this Agreement.

42. Work--The entire completed construction or the various separately identifiable parts thereof required to be provided under the Contract Documents with respect to this Project. Work includes and is the result of performing or furnishing labor, services, and documentation necessary to produce such construction and furnishing, installing, and incorporating all materials and all equipment into such construction, all as required by the Contract Documents.

43. *Work Change Directive*--A written directive to Contractor issued on or after the Effective Date of the Construction Agreement and signed by OWNER upon recommendation of the ENGINEER, ordering an addition, deletion, or revision in the Work, or responding to differing or unforeseen subsurface or physical conditions under which the Work is to be performed or to emergencies. A Work Change Directive will not change the Contract Price or the Contract Times but is evidence that the parties expect that the change directed or documented by a Work Change Directive will be incorporated in a subsequently issued Change Order following negotiations by the parties as to its effect, if any, on the Contract Price or Contract Times.

44. *Written Amendment*--A written amendment of the Contract Documents signed by OWNER and Contractor on or after the Effective Date of the Construction Agreement and normally dealing with the non-engineering or non-technical rather than strictly construction-related aspects of the Contract Documents.

ARTICLE 8 - EXHIBITS AND SPECIAL PROVISIONS

8.01 Exhibits Included

A. Exhibit A, "ENGINEER's Services," consisting of 6 pages.

B. Exhibit B, "OWNER's Responsibilities," consisting of 2 pages.

C. Exhibit C, "Payments to Engineer for Services and Reimbursable Expenses," consisting of 1 page.

D. Exhibit D is intentionally omitted

E. Exhibit E, "Notice of Acceptability of Work," consisting of 1 page.

F. Exhibit F is intentionally omitted.

G. Exhibit G, "Insurance," consisting of 1 pages.

H. Exhibit H, Attachment to Exhibit A, Scope of Services

8.02

Total Agreement

A. This Agreement (consisting of pages 1 to 13 inclusive, together with the Exhibits identified above), Exhibit H, the Scope of Services, and Attachment B, Standard Hourly Rates for Additional Services, constitutes the entire agreement between OWNER and ENGINEER and supersedes all prior written or oral understandings. This Agreement may only be amended, supplemented, modified, or canceled by a duly executed written instrument.

IN WITNESS WHEREOF, the parties hereto have executed this Agreement, the Effective Date of which is indicated on page 1.

OWNER:

By: John J. Tecklenburg

Title: Mayor

Date Signed:

Address for giving notices:

City of Charleston, Department of Public Service

75 Calhoun Street

Charleston, South Carolina 29401

ENGINEER:

By: Tony Woody, P.E.

Title: Vice President

Date Signed: 8·20·2020

Address for giving notices:

Thomas & Hutton Engineering Co.

682 Johnnie Dodds Blvd., Suite 100

Mt. Pleasant, SC 29464

Designated Representative (paragraph 6.02.A):

Matthew Fountain, PE, PG

Title: Director of Public Service

Phone Number: (843) 724-3754

Facsimile Number: (843) 973-7261

E-Mail Address: fountainm@charleston-sc.gov

Designated Representative (paragraph 6.02.A):

Richard P. Karkowski, PE, PH, CPSWQ, D.WRE

Title: Principal

Phone Number: 843-849-0200

Facsimile Number: 843-849-0203

E-Mail Address: karkowski.r@tandh.com

This document is based on the standard document prepared by the **ENGINEERS JOINT CONTRACT DOCUMENTS COMMITTEE** but has been **MODIFIED** to address particular aspects of the project and the contracting requirements of the **City of Charleston**. Consultation with an attorney is encouraged.

This is **EXHIBIT A**, consisting of 8 pages, referred to in and part of the **Agreement between OWNER and ENGINEER for Professional Services** dated _____ _____, _____.

Initial:
OWNER _____
ENGINEER _____

ENGINEER's Services

Article 1 of the Agreement is amended and supplemented to include the following agreement of the parties. ENGINEER shall provide Basic and Additional Services as set forth below and in Exhibit H, the Scope of Services.

PART 1 -- BASIC SERVICES

A1.01 *Conceptual Design Phase*

A. ENGINEER shall:

1. Consult with OWNER to define and clarify OWNER's requirements for the Project and available data.

2. Advise OWNER as to the necessity of OWNER's providing data or services of the types described in Exhibit B which are not part of ENGINEER's Basic Services and assist OWNER in obtaining such data and services.

3. Identify, consult with, and analyze requirements of governmental authorities having jurisdiction to approve the portions of the Project designed or specified by ENGINEER, including but not limited to mitigating measures identified in the environmental assessment.

4. Prepare Deliverables identified below and in Exhibit H (the "Deliverables") which will, as appropriate, contain schematic layouts, sketches and conceptual design criteria with appropriate exhibits to indicate the agreed-to requirements, considerations involved, and those alternate solutions available to OWNER which ENGINEER recommends. These Deliverables will be accompanied by ENGINEER's opinion of Total Project Costs for the recommended improvements for the Project with each component separately itemized, including the following, which will be separately itemized: opinion of probable Construction Cost, allowances for contingencies and for the estimated total costs of design, professional, and related services provided by ENGINEER and, on the basis of information furnished by OWNER, allowances for other items and services included within the definition of Total Project Costs.

5. Perform or provide the Conceptual Design Phase tasks or deliverables as described in Exhibit H.

6. Furnish two review copies each of the Deliverables identified in Exhibit H to OWNER and review with OWNER as required by the Owner.

7. Revise the Deliverables in response to OWNER's and other parties' comments, as appropriate, and furnish two final copies of the revised Deliverables to the OWNER.

8. OWNER and ENGINEER agree that this contract fee is for the Conceptual Design only. Upon successful completion of this phase of the work and upon agreement by the OWNER and the ENGINEER this contract shall be amended for subsequent phases to include the Preliminary Design Phase and the Final Design Phase work. The OWNER may also incorporate construction Phase services by written amendment acceptable to the OWNWER and the ENGINEER.

B. ENGINEER's services under the Conceptual Design Phase will be considered complete on the date when the final copies of the revised Deliverables have been delivered to and accepted by the OWNER.

A1.02 *Preliminary Design Phase*

A. After acceptance by OWNER of the Deliverables, selection by OWNER of a recommended solution and indication of any specific modifications or changes in the scope, extent, character, or design requirements of the Project desired by OWNER, and upon written authorization from OWNER, ENGINEER shall:

1. On the basis of the above acceptance, selection and authorization, prepare Preliminary Design Phase documents consisting of final design criteria, preliminary drawings, outline specifications and written descriptions of the Project.

2. Provide necessary field surveys, topographic/utility mapping, and geotechnical investigations for design purposes. Utility mapping will be based upon information obtained from utility owners by the Engineer.

3. Advise OWNER if additional reports, data, information, or services of the types described in Exhibit B are necessary and assist OWNER in obtaining such reports, data, information, or services.

4. Based on the information contained in the Preliminary Design Phase documents, submit a revised opinion of probable Construction Cost and any adjustments to Total Project Costs known to ENGINEER, which will be itemized as provided in paragraph A1.01.A.5.

5. Perform or provide the Preliminary Design Phase tasks or deliverables as described in Exhibit H.

6. Furnish the Preliminary Design Phase documents to and review them with OWNER.

7. Submit to OWNER two (2) review copies of the Preliminary Design Phase documents and revised opinion of probable Construction Cost.

8. Receive and address Owner comments.

9. Incorporate review comments into preliminary documents and resubmit two (2) copies each of the Deliverables to Owner for final approval.

B. ENGINEER's services under the Preliminary Design Phase will be considered complete on the date when final copies of the Preliminary Design Phase documents have been delivered to and accepted by OWNER.

A1.03 *Final Design Phase*

A. After acceptance by OWNER of the Preliminary Design Phase documents and revised opinion of probable Construction Cost as determined in the Preliminary Design Phase, but subject to any OWNER-directed modifications or changes in the scope, extent, character, or design requirements of or for the Project, and upon written authorization from OWNER, ENGINEER shall:

1. On the basis of the above acceptance, direction, and authorization, prepare final Drawings indicating the scope, extent, and character of the Work to be performed and furnished by Contractor. Specifications will be prepared, where appropriate, in general conformance with the 16-division format of the Construction Specifications Institute.

2. Provide technical criteria, written descriptions, and design data for OWNER's use in filing applications for permits from or approvals of governmental authorities having jurisdiction to review or approve the final design of the Project and assist OWNER in consultations with appropriate authorities and utility companies.

3. Advise OWNER of any adjustments to the opinion of probable Construction Cost and any adjustments to Total Project Costs known to ENGINEER, itemized as provided in paragraph A1.01.A.5.

4. Perform or provide the Final Design Phase tasks or deliverables as described in Exhibit H.

5. Prepare and furnish Bidding Documents for review and approval by OWNER, its legal counsel, and other advisors, as appropriate, and assist OWNER in the preparation of other related documents. Incorporate Owner's review comments into bidding documents.

6. Submit two (2) final copies of the Bidding Documents and a revised opinion of probable Construction Cost to OWNER.

7. Prepare submittal packages and/or permit applications for the reviews, approvals, and permits from governmental authorities having jurisdiction to approve the phases of the Project designed or specified by ENGINEER and such reviews, approvals, and consents from others as may be necessary for completion of each phase of the Project se described in Exhibit H. Provide additional information, data, and response to comments as needed in pursuing the reviews, approvals and permits.

B. The number of prime contracts for Work designed or specified by ENGINEER upon which the ENGINEER's compensation has been established under this Agreement is two (2).

C. ENGINEER's services under the Final Design Phase will be considered complete on the date when the submittals required by paragraph A1.03.A.6 have been delivered to OWNER with all comments incorporated.

A1.04 *Bidding or Negotiating Phase*

A. After acceptance by OWNER of the Bidding Documents and the most recent opinion of probable Construction Cost as determined in the Final Design Phase, and upon written authorization by OWNER to proceed, ENGINEER shall:

1. Assist OWNER in advertising for and obtaining bids or negotiating proposals for the Work and, where applicable, maintain a record of prospective bidders to whom Bidding Documents have been issued, attend pre-Bid conferences, if any, and receive and process Contractor deposits or charges for the Bidding Documents.

2. Issue Addenda as appropriate to clarify, correct, or change the Bidding Documents.

3. Consult with OWNER as to the acceptability of subcontractors, suppliers, and other individuals and entities proposed by Contractor for those portions of the Work as to which such acceptability is required by the Bidding Documents.

4. Perform or provide the Bidding or Negotiating Phase tasks or deliverables as described in Exhibit H.

5. Attend the Bid opening, prepare Bid tabulation sheets, and assist OWNER in evaluating Bids or proposals in accordance with Article 5, Paragraph 5.02 Opinions of Total Project Cost and in assembling and awarding contracts for the Work.

B. The Bidding or Negotiating Phase will be considered complete upon commencement of the Construction Phase or upon cessation of negotiations with prospective Contractors.

A1.05 *Construction Phase*

A. Upon successful completion of the Bidding and Negotiating Phase, and upon written authorization from OWNER, ENGINEER shall:

1. *General Administration of Construction Contract.* Consult with OWNER and act as OWNER's representative as provided in the General Conditions. The extent and limitations of the duties, responsibilities and authority of ENGINEER as assigned in said General Conditions shall not be modified, except as ENGINEER may otherwise agree in writing. All of OWNER's instructions to Contractor will be issued through ENGINEER, who shall have authority to act on behalf of OWNER in dealings with Contractor to the extent provided in this Agreement and said General Conditions except as otherwise provided in writing.

2. *Resident Project Representative (RPR) if authorized in writing by the OWNER.* Provide the services of an RPR at the Site to assist the ENGINEER and to provide more extensive observation of Contractor's work.

3. *Selecting Independent Testing Laboratory.* Assist OWNER in the selection of an independent testing laboratory to perform the services identified in paragraph B2.01.0.

4. *Pre-Construction Conference.* Participate in a Pre-Construction Conference prior to commencement of Work at the Site.

5. *Baselines and Benchmarks.* As appropriate, establish baselines and benchmarks for locating the Work which in ENGINEER's judgment are necessary to enable Contractor to proceed.

6. *Visits to Site and Observation of Construction.* In connection with observations of Contractor's work in progress while it is in progress:

a. Make visits to the Site at intervals appropriate to the various stages of construction, as ENGINEER deems necessary, in order to observe as an experienced and qualified design professional the progress and quality of the Work. Such visits and observations by ENGINEER, and the Resident Project Representative, if any, are not intended to be exhaustive or to extend to every aspect of Contractor's work in progress or to involve detailed inspections of Contractor's work in progress beyond the responsibilities specifically assigned to ENGINEER in this Agreement and the Contract Documents, but rather are to be limited to spot checking, selective sampling, and similar methods of general observation of the Work based on ENGINEER's exercise of professional judgment as assisted by the Resident Project Representative, if any. Based on information obtained during such visits and such observations, ENGINEER will determine in general if Contractor's work is proceeding in accordance with the Contract Documents, and ENGINEER shall keep OWNER informed of the progress of the Work.

b. The purpose of ENGINEER's visits to, and representation by the Resident Project Representative, if any, at the Site, will be to enable ENGINEER to better carry out the duties and responsibilities assigned to and undertaken by ENGINEER during the Construction Phase, and, in addition, by the exercise of ENGINEER's efforts as an experienced and qualified design professional, to provide for OWNER a greater degree of confidence that the completed Work will conform in general to the Contract Documents and that the integrity of the design concept of the completed Project as a functioning whole as indicated in the Contract Documents has been implemented and preserved by Contractor. ENGINEER shall not, during such visits or as a result of such observations of Contractor's work in progress, supervise, direct, or have control over Contractor's work, nor shall ENGINEER have authority over or responsibility for the means, methods, techniques, sequences, or procedures of construction selected by Contractor, for safety precautions and programs incident to Contractor's work, or for any failure of Contractor to comply with Laws and Regulations applicable to Contractor's furnishing and performing the Work.

7. *Defective Work.* Recommend to OWNER that Contractor's work be disapproved and rejected while it is in progress if, on the basis of such observations, ENGINEER believes that such work will not produce a completed Project that conforms generally to the Contract Documents or that it will prejudice the integrity of the design concept of the completed Project as a functioning whole as indicated in the Contract Documents.

8. *Clarifications and Interpretations; Field Orders.* Issue necessary clarifications and interpretations of the Contract Documents as appropriate to the orderly completion of Contractor's work. Such clarifications and interpretations will be consistent with the intent of and reasonably inferable from the Contract Documents. ENGINEER may issue Field Orders authorizing minor variations from the requirements of the Contract Documents.

9. *Change Orders and Work Change Directives.* Recommend Change Orders and Work Change Directives to OWNER, as appropriate, and prepare Change Orders and Work Change Directives as required.

10. *Shop Drawings and Samples.* Review and approve or take other appropriate action in respect to Shop Drawings and Samples and other data which Contractor is required to submit, but only for conformance with the information given in the Contract Documents and compatibility with the design concept of the completed Project as a functioning whole as indicated in the Contract Documents. Such reviews and approvals or other action will not extend to means, methods, techniques, sequences or procedures of construction or to safety precautions and programs incident thereto. ENGINEER has an obligation to meet any Contractor's submittal schedule that has earlier been acceptable to ENGINEER.

11. *Substitutes and "or-equal."* Evaluate and determine the acceptability of substitute or "or-equal" materials and equipment proposed by Contractor, but subject to the provisions of paragraph A2.02.A.2 of this Exhibit A.

12. *Inspections and Tests.* Require such special inspections or tests of Contractor's work as deemed reasonably necessary, and receive and review all certificates of inspections, tests, and approvals required by Laws and Regulations or the Contract Documents. ENGINEER's review of such certificates will be for the purpose of determining that the results certified indicate compliance with the Contract Documents and will not constitute an independent evaluation that the content or procedures of such inspections, tests, or approvals comply with the requirements of the Contract Documents. ENGINEER shall be entitled to rely on the results of such tests.

13. *Disagreements between OWNER and Contractor.* Render formal written decisions on all claims of OWNER and Contractor relating to the acceptability of Contractor's work or the interpretation of the requirements of the Contract Documents pertaining to the execution and progress of Contractor's work. In rendering such decisions, ENGINEER shall be fair and not show partiality to OWNER or Contractor.

14. *Applications for Payment.* Based on ENGINEER's observations as an experienced and qualified design professional and on review of Applications for Payment and accompanying supporting documentation:

a. Determine the amounts that ENGINEER recommends Contractor be paid. Such recommendations of payment will be in writing and will constitute ENGINEER's representation to OWNER, based on such observations and review, that, to the best of ENGINEER's knowledge, information and belief, Contractor's work has progressed to the point indicated, the quality of such work is generally in accordance with the Contract Documents (subject to an evaluation of the Work as a functioning whole prior to or upon Substantial Completion, to the results of any subsequent tests called for in the Contract Documents and to any other qualifications stated in the recommendation), and the conditions precedent to Contractor's being entitled to such payment appear to have been fulfilled in so far as it is ENGINEER's responsibility to observe Contractor's work. In the case of unit price work, ENGINEER's recommendations of payment will include final determinations of quantities and classifications of Contractor's work (subject to any subsequent adjustments allowed by the Contract Documents). The responsibilities of ENGINEER contained in paragraph A1.05.A.6.a are expressly subject to the limitations set forth in paragraph A1.05.A.6.b and other express or general limitations in this Agreement and elsewhere.

b. By recommending any payment, ENGINEER shall not thereby be deemed to have represented that observations made by ENGINEER to check the quality or quantity of Contractor's work as it is performed and furnished have been exhaustive, extended to every aspect of Contractor's work in progress, or involved detailed inspections of the Work beyond the responsibilities specifically assigned to ENGINEER in this Agreement and the Contract Documents. Neither ENGINEER's review of Contractor's work for the purposes of recommending payments nor ENGINEER's recommendation of any payment including final payment will impose on ENGINEER responsibility to supervise, direct, or control Contractor's work in progress or for the means, methods, techniques, sequences, or procedures of construction or safety precautions or programs incident thereto, or Contractor's compliance with Laws and Regulations applicable to Contractor's furnishing and performing the Work. It will also not impose responsibility on ENGINEER to make any examination to ascertain how or for what purposes Contractor has used the moneys paid on account of the Contract Price, or to determine that title to any portion of the work in progress, materials, or equipment has passed to OWNER free and clear of any liens, claims, security interests, or encumbrances, or that there may not be other matters at issue between OWNER and Contractor that might affect the amount that should be paid. Notwithstanding the foregoing, if the ENGINEER is aware that Contractor is not performing in accordance with this section, ENGINEER shall promptly notify OWNER of such non-performance.

15. *Contractor's Completion Documents.*

a. Receive and review maintenance and operating instructions, schedules, and guarantees.

b. Receive bonds, certificates, or other evidence of insurance not previously submitted and required by the Contract Documents, certificates of inspection, tests and approvals, Shop Drawings, Samples and other data approved as provided under paragraph A1.05.A.10, and the annotated record documents which are to be assembled by Contractor in accordance with the Contract Documents to obtain final payment. The extent of such ENGINEER's review will be limited as provided in paragraph A1.05.A.10.

c. ENGINEER shall transmit these documents to OWNER.

16. *Substantial Completion.* Promptly after notice from Contractor that Contractor considers the entire Work ready for its intended use, in company with OWNER and Contractor, conduct an inspection to determine if the Work is Substantially Complete. If after considering any objections of OWNER, ENGINEER considers the Work Substantially Complete, ENGINEER shall deliver a certificate of Substantial Completion to OWNER and Contractor.

17. *Additional Tasks.* Perform or provide the following additional Construction Phase tasks or deliverables:

a. Prepare and submit record drawings showing all changes and provide to the OWNER.

18. *Final Notice of Acceptability of the Work.* Conduct a final inspection to determine if the completed Work of Contractor is acceptable so that ENGINEER may recommend, in writing, final payment to Contractor. Accompanying the recommendation for final payment, ENGINEER shall also provide a notice in the form attached hereto as Exhibit E (the "Notice of Acceptability of Work") that the Work is acceptable (subject to the provisions of paragraph A1.05.A.14.b) to the best of ENGINEER's knowledge, information, and belief and based on the extent of the services provided by ENGINEER under this Agreement.

19. *Revisions to Drawings and Specification.* Provide services in making revisions to Drawings and Specifications occasioned by the acceptance of substitute materials or equipment other than "or-equal" items; and services after the award if the Construction Agreement in evaluating and determining the acceptability of a substitution which is found to be inappropriate for the Project or an excessive number of substitutions.

B. *Duration of Construction Phase.* The Construction Phase will commence with the execution of the first Construction Agreement for the Project and will terminate upon written recommendation by ENGINEER for final payment to Contractor. If the Project involves more than one prime contract as indicated in paragraph A1.03.C, Construction Phase services may be rendered at different times in respect to the separate contracts.

C. *Limitation of Responsibilities.* ENGINEER shall not be responsible for the acts or omissions of any Contractor, or of any of their subcontractors, suppliers, or of any other individual or entity performing or furnishing any of the Work. ENGINEER shall not be responsible for failure of any Contractor to perform or furnish the Work in accordance with the Contract Documents. Notwithstanding the foregoing, if ENGINEER is aware that Contractor has failed to meet certain requirements contained in the Contract Documents, ENGINEER shall promptly notify OWNER.

A1.06 *Post-Construction Phase*

A. Upon written authorization from OWNER, ENGINEER, during the Post-Construction Phase, shall:

1. Provide assistance in connection with the testing and adjusting of Project equipment or systems.

2. Assist OWNER in training OWNER's staff to operate and maintain Project, equipment, and systems.

3. Assist OWNER in developing procedures for control of the operation and maintenance of, and record keeping for Project equipment and systems.

4. Together with OWNER, visit the Project to observe any apparent defects in the Work, assist OWNER in consultations and discussions with Contractor concerning correction of any such defects, and make recommendations as to replacement or correction of Defective Work, if present.

5. Perform or provide the following additional Post-Construction Phase tasks or deliverables:

6. In company with OWNER or OWNER's representative, provide an inspection of the Project within one month before the end of the Correction Period to ascertain whether any portion of the Work is subject to correction.

B. The Post-Construction Phase services may commence during the Construction Phase and, if not otherwise modified in this Exhibit A, will terminate at the end of the Correction Period.

PART 2 -- ADDITIONAL SERVICES

A2.01 *Additional Services that are not required by Exhibit A, or Exhibit H which required an approved contract amendment*

A. If authorized in writing by OWNER, ENGINEER shall furnish or obtain from others Additional Services of the types listed below. These services will be paid for by OWNER as indicated in Article 4 of the Agreement.

1. Preparation of applications and supporting documents (in addition to those furnished under Basic Services) for private or governmental grants, loans or advances in connection with the Project; preparation or review of environmental assessments and impact statements; review and evaluation of the effects on the design requirements for the Project of any such statements and documents prepared by others; and assistance in obtaining approvals of authorities having jurisdiction over the anticipated environmental impact of the Project unless otherwise provided in Basic Services.

2. Services to make measured drawings of or to investigate existing conditions or facilities, or to verify the accuracy of drawings or other information furnished by OWNER.

3. Services resulting from significant changes in the scope, extent, or character of the portions of the Project designed or specified by ENGINEER or its design requirements including, but not limited to, changes in size, complexity, OWNER's schedule, character of construction, or method of financing; and revising previously accepted studies, reports, Drawings, Specifications, or Contract Documents when such revisions are required by changes in Laws and Regulations enacted subsequent to the Effective Date of this Agreement or are due to any other causes beyond ENGINEER's control.

4. Services resulting from OWNER's request to evaluate additional Conceptual Design Phase alternative solutions beyond those previously identified.

5. Services required as a result of OWNER's providing incomplete or incorrect Project information with respect to Exhibit B.

6. Providing renderings or models for OWNER's use.

7. Undertaking investigations and studies including, but not limited to, detailed consideration of operations, maintenance, and overhead expenses; the preparation of feasibility studies, cash flow and economic evaluations, rate schedules, and appraisals; assistance in obtaining financing for the Project; evaluating processes available for licensing, and assisting OWNER in obtaining process licensing; detailed quantity surveys of materials, equipment, and labor; and audits or inventories required in connection with construction performed by OWNER.

8. Furnishing services of ENGINEER's Consultants for other than Basic Services.

9. Services attributable to more prime construction contracts than specified in paragraph A1.03.C.

10. Services during out-of-town travel required of ENGINEER other than for visits to the Site or OWNER's office.

11. Preparing for, coordinating with, participating in and responding to structured independent review processes, including, but not limited to, construction management, cost estimating, project peer review, value engineering, and constructability review requested by OWNER; and performing or furnishing services required to revise studies, reports, Drawings, Specifications, or other Bidding Documents as a result of such review processes.

12. Preparing additional Bidding Documents or Contract Documents for alternate bids or prices requested by OWNER for the Work or a portion thereof.

13. Determining the acceptability of substitute materials and equipment proposed during the Bidding or Negotiating Phase when substitution prior to the award of contracts is allowed by the Bidding Documents.

14. Assistance in connection with Bid protests, rebidding, or renegotiating contracts for construction, materials, equipment, or services, except when such assistance is required by the Agreement paragraph 5.02.

15. Providing construction surveys and staking to enable Contractor to perform its work other than as required under paragraph A1.05.A.5and any type of property surveys or related engineering services needed for the transfer of interests in real property if not provided by OWNER; and providing other special field surveys.

16. Providing assistance in resolving any Hazardous Environmental Condition in compliance with current Laws and Regulations.

17. Preparing and furnishing to OWNER Record Drawings showing appropriate record information based on Project annotated record documents received from Contractor.

18. Preparation of operation and maintenance manuals.

19. Preparing to serve or serving as a consultant or witness for OWNER in any litigation, arbitration or other dispute resolution process related to the Project unless the service is required as a result of an error or omission or breach of this agreement by the ENGINEER or its officers, directors, partners, employees, or consultants.

20. Providing more extensive services required to enable ENGINEER to issue notices or certifications requested by OWNER under paragraph 6.01.G of the Agreement.

21. Other services performed or furnished by ENGINEER not otherwise provided for in this Agreement.

This is **EXHIBIT B**, consisting of 2 pages, referred to in and part of the **Agreement between OWNER and ENGINEER for Professional Services** dated _____, _____.

Initial:
OWNER _____
ENGINEER _____

OWNER's Responsibilities

Article 2 of the Agreement is amended and supplemented to include the following agreement of the parties.

B2.01 In addition to other responsibilities of OWNER as set forth in this Agreement, OWNER shall:

A. Provide ENGINEER with all criteria and full information as to OWNER's requirements for the Project, including design objectives and constraints, space, capacity and performance requirements, flexibility, and expandability, and any budgetary limitations; and furnish copies of all design and construction standards which OWNER will require to be included in the Drawings and Specifications; and furnish copies of OWNER's standard forms, conditions, and related documents for ENGINEER to include in the Bidding Documents, when applicable.

B. Furnish to ENGINEER any other available information pertinent to the Project including reports and data relative to previous designs, or investigation at or adjacent to the Site.

C. Following ENGINEER's assessment of initially-available Project information and data and upon ENGINEER's request, furnish or otherwise make available such additional Project related information and data as is reasonably required to enable ENGINEER to complete its Basic and Additional Services. Such additional information or data would generally include the following, if available to OWNER:

1. Property descriptions.

2. Zoning, deed, and other land use restrictions.

3. Property, boundary, easement, right-of-way, and other special surveys or data, including establishing relevant reference points.

4. Explorations and tests of subsurface conditions at or contiguous to the Site, drawings of physical conditions in or relating to existing surface or subsurface structures at or contiguous to the Site, or hydrographic surveys, with appropriate professional interpretation thereof.

5. Environmental assessments, audits, investigations and impact statements, and other relevant environmental or cultural studies as to the Project, the Site, and adjacent areas.

6. Data or consultations as required for the Project but not otherwise identified in the Agreement or the Exhibits thereto.

D. Give prompt written notice to ENGINEER whenever OWNER observes or otherwise becomes aware of a Hazardous Environmental Condition or of any other development that affects the scope or time of performance of ENGINEER's services, or any defect or nonconformance in ENGINEER's services or in the work of any Contractor.

E. Provide, as required for the Project:

1. Placement and payment for advertisement for Bids in appropriate publications.

F. Advise ENGINEER of the identity and scope of services of any independent consultants employed by OWNER to perform or furnish services in regard to the Project.

G. Furnish to ENGINEER data as to OWNER's anticipated costs for services to be provided by others for OWNER so that ENGINEER may make the necessary calculations to develop and periodically adjust ENGINEER's opinion of Total Project Costs.

H. If OWNER designates a construction manager or an individual or entity other than, or in addition to, ENGINEER to represent OWNER at the Site, define and set forth as an attachment to this Exhibit B the duties, responsibilities, and limitations of authority of such other party and the relation thereof to the duties, responsibilities, and authority of ENGINEER.

I. If more than one prime contract is to be awarded for the Work designed or specified by ENGINEER, designate a person or entity to have authority and responsibility for coordinating the activities among the various prime Contractors, and define and set forth the duties, responsibilities, and limitations of authority of such individual or entity and the relation thereof to the duties, responsibilities, and authority of ENGINEER as an attachment to this Exhibit B that is to be mutually agreed upon and made a part of this Agreement before such services begin.

J. Attend the pre-bid conference, bid opening, pre-construction conferences, construction progress and other job related meetings, and Substantial Completion and final payment inspections.

K. Examine all alternate solutions, studies, reports, sketches, Drawings, Specifications, proposals, and other documents presented by ENGINEER and render decisions in a timely manner pertaining thereto.

This is **EXHIBIT C**, consisting of 1 page, referred to in and part of the **Agreement between OWNER and ENGINEER for Professional Services** dated _____, _____

Initial:

OWNER _____

ENGINEER _____

Payments to ENGINEER for Services and Reimbursable Expenses

Article 4 of the Agreement is amended and supplemented to include the following agreement of the parties:

ARTICLE 4 -- PAYMENTS TO THE ENGINEER

C4.01 *For Basic Services Having A Determined Scope --Lump Sum Method of Payment*

A. OWNER shall pay ENGINEER as follows:

1. A Lump Sum amount of $82,200 based on the following assumed distribution of compensation:

a. Study and Conceptual Design Phase $82,200

2. A Time & Expense (T&E) amount of $37,400 based on the following assumed distribution of compensation:

a. Project Management and Coordination $37,400

3. The Lump Sum includes compensation for ENGINEER's services and services of ENGINEER's Consultants, if any. Appropriate amounts have been incorporated in the Lump Sum to account for labor, overhead, profit, and Reimbursable Expenses.

4. The portion of the Lump Sum amount billed for ENGINEER's services will be based upon ENGINEER's estimate of the proportion of the total services actually completed during the billing period to the Lump Sum as approved by OWNER.

5. Upon completion of the Conceptual Design Phase, the ENGINEER and OWNER may agree to negotiate in good faith the scope of services, method of payment, amount of payment, and contract time for the Preliminary Design, Final Design, Bidding & Negotiation, Construction and Post-Construction Phases.

C4.02 *For Additional Services*

A. If the OWNER authorizes a Change Order, Work Change Directive, Contract Amendment, etc., authorizing the ENGINEER to furnish or obtain from others additional services that are not required by this Contract, Exhibit A or Exhibit H, the OWNER and ENGINEER shall negotiate in good faith a fair adjustment to the Lump Sum amount for the Owner authorized additional services.

This is **EXHIBIT E**, consisting of 2 pages, referred to in and part of the **Agreement between OWNER and ENGINEER for Professional Services** dated _____, _____

Initial:
OWNER _____
ENGINEER _____

NOTICE OF ACCEPTABILITY OF WORK

PROJECT: Windermere Neighborhood Drainage Improvement Project – Phase 1

OWNER: City of Charleston

OWNER's Construction Contract Identification:

EFFECTIVE DATE OF THE CONSTRUCTION AGREEMENT:

CONSTRUCTION CONTRACT DATE:

ENGINEER: Thomas & Hutton Engineering Co.

To: OWNER

And To: CONTRACTOR

The undersigned hereby gives notice to the above OWNER and CONTRACTOR that the completed Work furnished and performed by CONTRACTOR under the above Contract is acceptable, expressly subject to the provisions of the related Contract Documents and the terms and conditions set forth on the reverse side hereof.

By: _____

Title: _____

Dated: _____, _____

(Reverse side of Notice)

CONDITIONS OF NOTICE OF ACCEPTABILITY OF WORK

The Notice of Acceptability of Work ("Notice") on the front side of this sheet is expressly made subject to the following terms and conditions to which all persons who receive said Notice and rely thereon agree:

1. Said Notice is given with the skill and care ordinarily used by members of the engineering profession practicing under similar conditions at the same time and in the same locality.

2. Said Notice reflects and is an expression of the professional judgment of ENGINEER.

3. Said Notice is given as to the best of ENGINEER's knowledge, information, and belief as of the date hereof.

4. Said Notice is based entirely on and expressly limited by the scope of services ENGINEER has been employed by OWNER to perform or furnish during construction of the Project (including observation of the CONTRACTOR's work) under ENGINEER's Agreement with OWNER and under the Construction Contract referenced on the reverse hereof, and applies only to facts that are within ENGINEER's knowledge or could reasonably have been ascertained by ENGINEER as a result of carrying out the responsibilities specifically assigned to ENGINEER under ENGINEER's Agreement with OWNER and the Construction Contract referenced on the reverse hereof.

5. Said Notice is not a guarantee or warranty of CONTRACTOR's performance under the Construction Contract referenced on the reverse hereof nor an assumption of responsibility for any failure of CONTRACTOR to furnish and perform the Work thereunder in accordance with the Contract Documents.

This is **EXHIBIT G**, consisting of 1 page, referred to in and part of the **Agreement between OWNER and ENGINEER for Professional Services** dated _____, _____.

Initial:
OWNER _____
ENGINEER _____

Insurance

Paragraph 6.05 of the Agreement is amended and supplemented to include the following agreement of the parties.

G6.05 *Insurance*

A. The limits of liability for the insurance required by paragraph 6.05.A and 6.05.B of the Agreement are as follows:

1. By ENGINEER:

a. Workers' Compensation:	Statutory
b. Employer's Liability --	
1) Each Accident:	$600,000.00
2) Disease, Policy Limit:	$600,000.00
3) Disease, Each Employee:	$600,000.00
c. General Liability --	
1) Each Occurrence (Bodily Injury and Property Damage):	$1,000,000.00
2) General Aggregate:	$2,000,000.00
d. Excess or Umbrella Liability --	
1) Each Occurrence:	$4,000,000.00
2) General Aggregate:	$4,000,000.00
e. Automobile Liability --	
1) Bodily Injury:	
a) Each Accident	$1,000,000.00
2) Property Damage:	
a) Each Accident	
[or]	
1) Combined Single Limit (Bodily Injury and Property Damage): Each Accident	$1,000,000.00
f. Other (specify):	
Professional Liability (errors and omissions)	$2,000,000.00

B. *Additional Insureds*

1. The OWNER shall be listed on ENGINEER'S General Liability Policy.

This is **EXHIBIT H**, consisting of 6 pages, referred to in and part of the **Agreement between OWNER and ENGINEER for Professional Services** dated _____, _____.

Initial:
OWNER _____
ENGINEER _____

Windermere Neighborhood Drainage Improvement Project
Scope of Services

The City of Charleston, South Carolina, intends to plan, design, and construct improvements to the stormwater collection and conveyance system in the Windermere Neighborhood in the West Ashley area of the City. The existing drainage system in the Windermere East basin is typified by undersized channels, culverts, and storm drain systems with multiple utility conflicts and a tidally influenced outfall channel constricted from sedimentation. Drainage in the Windermere East drainage basin is generally conveyed east and south via roadside ditches and culverts, under and along the West Ashley Greenway, to an undersized storm drain system that flows south along William Ackerman Lane. The system ultimately outfalls to a tidal tributary of Wappoo Creek, near the southern end of William Ackerman Lane just behind (west) of the South Windermere Shopping Center. In addition, the adjacent South Windermere Basin conveys stormwater along and under Folly Road Blvd. to a tidally influenced channel that is then conveyed under William Ackerman Lane just south of the Windermere East Basin outfall. Currently, several roads, homes, and businesses in these drainage basins experience significant and repeated flooding.

Previous studies (D&F, 1984 and City, 2019) have developed and refined proposed improvements for the Windermere East Basin. The current proposed plan for the drainage basin includes added and increased culvert sizing along Beverly Road and through the drainage easement to the West Ashley Greenway; improved and lined channel along the West Ashley Greenway; and increasing the sizes of the storm drain system through the drainage easement to and along William Ackerman Lane to the existing outfall. Additional piping was also proposed under William Ackerman Lane to convey drainage from the storm drain systems that outfall west of Folly Road Blvd. A potential new, second outfall was identified in the City's Concept Plans, which is located to the west side of the Windermere East drainage basin along the western property line of the St. Andrews School of Math and Science. This conceptual outfall plan connects to the existing system along the West Ashley Greenway and provides an alternate route for stormwater that will flow west and then south under Culbertson Drive through a proposed drainage easement to the ultimate outfall to a tidal tributary of Wappoo Creek.

Previous Studies:

D&F, 1984. *Master Drainage and Floodplain Management Plan for City of Charleston, South Carolina* (Davis & Floyd, Inc., May 1984)

Concept Plans, 2019. *Windermere Drainage Improvement Project" Conceptual Plans* (City of Charleston, June 2019)

It is anticipated that the Windermere Neighborhood Drainage Improvement Project's scope of services will be provided under five broad phases as follows:

Study and Conceptual Design Phase

The subject of this Scope of Services is to detail and describe the services to be provided during the Study and Conceptual Design Phase. This Scope of Services will be amended at a future date to include the detailed services to be provided under the Preliminary Design Phase, Final Design Phase, Bidding or Negotiation Phase, and Construction Phase.

Study and Conceptual Design Phase

1.1 Study

1.1.a Data Collection

The Consultant will develop a project database consisting of readily available geographical data and historic information available for the project area. The project area is defined as the Windermere East and South Windermere Basins, as generally identified in the 1984 *Master Drainage and Floodplain Management Plan for City of Charleston.* It is anticipated the geographical data will consist of the following:

- Digital Elevation Model
- Contours
- Parcels
- Roads
- Land Use
- Soils
- Utilities – water and sewer
- Aerial photography
- Wetlands/Critical Area (NWI)

Initial due diligence will be conducted. Specifically, all permitting agencies will be approached to discuss permitting and potential requirements for the implementation of the project.

Preliminary contact will be made with major utility providers to gather information and available mapping for major utilities in the project area (to supplement what has already been provided by the City). It is anticipated that the following utilities will be contacted:

- Water and sewer – Charleston Water System
- Power and gas – South Carolina Electric and Gas/Dominion
- Telecommunications/fiber optic cables – AT&T
- Cable TV – Comcast/WOW

Data gathered in electronic format will be added to the project database mapping. Data gathered in other formats (i.e. paper mapping) will be added to the project database mapping for display purposes, if appropriate.

1.1b Study Survey

Study level survey data will be obtained at critical locations. This survey data will be limited to areas/locations critical to the understanding of the drainage system and to be used in the modeling of the system. In addition, some initial SUE (utility potholing) and pipe video inspections (to supplement what has already been provided by the City) will be conducted to gather information to help assess potential utility impacts and the conditions of the existing systems (such as the connection to the SCDOT system in the Wesley Drive/Folly Road Boulevard Area). Approximately 10 potholes and 1,000 linear feet of pipe video inspections are expected to be obtained at this time. The engineer will also perform site visits to inspect and verify the condition of the existing systems to supplement the survey and potholing data.

Property plat research will be conducted to attempt to determine the location and type of drainage easements within the study area. The property plat research will be limited to the Windermere East Basin and the portion of the South Windermere Basin between Ackerman Lane and Folly Road Blvd.

1.1c Hydrologic and Hydraulic Modeling

1.1c.1 Existing Conditions Hydrologic and Hydraulic Model

The Consultant will develop a hydrologic and hydraulic (H&H) model capable of simulating the existing conditions of the study area. The hydrologic and hydraulic model will be developed in ICPR Version 4 due to its capability to simulate varying tidal/tailwater conditions open channel and closed storm drain systems, and detention/infiltration (in case these BMPs are identified as potential improvement alternatives). The model will be developed from readily available data and will incorporate the study level survey data.

The model will be capable of simulating rainfall and runoff from the Windermere East Drainage Basin. This basin is bounded by Campbell Drive to the West, Savannah Highway to the north, Wesley Drive/Folly Road Blvd. to the East, and a tidal creek to the south. The South Windermere Basin will also be included in the model to assess the drainage conveyed from Folly Road Blvd. and ultimately under William Ackerman Lane. This area is bounded roughly by Savannah Highway to the North, Jamestown Road to the East, Johnson Road to the South, and the Windermere East basin to the West.

The existing conditions model (existing land uses, existing collection system, and existing outfalls) will be executed and calibrated based on previous studies and reported flooding.

1.1c.2 Alternatives Analysis

Based on the results of the existing conditions H&H modeling, the information collected during data collection, other factors (such as target goals and/or levels of service), and in coordination with the City, the Consultant will analyze alternative improvement projects and best management practices (BMPs) for the project area. These alternative projects may include alternative outfalls, capacity improvements, basin diversions, stormwater detention, etc. In addition, other BMPs may be considered for implementation including green infrastructure (GI) projects in appropriate areas. It is anticipated that this will be an iterative process with the City that may combine the alternatives analysis with future conditions modeling (see below) to arrive at the recommended improvements (see below).

1.1c.3 Proposed Improvements Hydrologic and Hydraulic Model

A hydrologic and hydraulic model of the proposed improvements, using the original study (D&F, 1984) and the City's conceptual plans (City, 2019) as baselines, will be developed. The proposed conditions model will build on the existing conditions model by incorporating the proposed improvements. Since the watersheds are completely developed, the runoff conditions (i.e. curve numbers) will not be modified from existing to proposed conditions.

The model will be developed to allow for the assessment of:

- Improvements to the existing system alignment and outfall
- Alternative outfall (based on the City's proposed 2nd outfall concept)
- Other potential internal (upstream) system improvements
- Drainage connections across the West Ashley Greenway
- Improvements to the SCDOT drainage system in Folly Road
- Improvements to the Ackerman Lane culvert and upstream channel, including muted tide structure
- Optional diversion of sump at Campbell Dr. (identified in original masterplan D&F, 1984)
- Optional green infrastructure improvements along Stocker Drive and Berkeley Road

1.1.d Recommendations

Based on the findings above and input from the City, the Consultant will develop the final recommended improvements for the Windermere East and South Windermere Basin drainage systems.

A summary report shall be prepared documenting the activities and presenting the recommended improvements. The report shall document existing and proposed conditions model input, documentation and findings, outfall configuration, and other design considerations. In addition, a recommended phasing plan, focusing on Phase 1 – establishing the 2nd outfall, will be developed. Other future phased improvements may include collection system and existing outfall improvements (Phase 2) and secondary system improvements including localized green infrastructure (Phase 3).

Deliverables: Preliminary Engineering Report documenting final recommended improvements and other documentation (model input/output, existing conditions, proposed improvements, budget level cost estimates and phasing plan).

1.2 Conceptual Design – Phase 1

1.2a Conceptual Design

Based upon the detailed analysis presented above, the Consultant shall prepare a conceptual layout of the proposed drainage improvements for Phase 1. Phase 1 improvements will consist of the 2nd outfall for the Windermere East Basin drainage system. The layout will include the sizes and alignment of the new outfall systems and provide a profile of the proposed improvement. The plan shall be prepared on a 1" = 10' scale drawing and utilize the existing City supplied survey and other owner provided information. The level of detail shall be sufficient in nature to itemize necessary construction elements, property acquisition, permitting and designs. The plans will be developed so that they can readily be advanced through preliminary (60%) and final (90%) designs (as part of a future scope of work).

1.2b Conceptual Opinion of Probable Cost

A conceptual opinion of probable cost for the recommended improvements will be developed based on budget input from the City.

Deliverables: Conceptual Plans and Opinion of Probable Construction Cost

1.3 Project Management and Coordination

Due to the uncertainty of the extent of service to be provided under Project Management and Coordination (see below), service under this task will be provided on a time and expense (T&E) basis.

1.3a Project Management

General project management includes all the coordination, correspondence, and documentation associated with execution of the project.

1.3b Quality Control and Quality Assurance

The QA/QC task will include the development and implementation of quality assurance project plans (QAPPs). The QAPPs will document the project scope, stand operating procedures (SOPs), controls, and other processes to be implemented to ensure quality is a foundation of this project.

1.3c Project Meetings

A kick-off meeting and project status meetings will be held at regular intervals during the course of the study and conceptual design phase. The Consultant shall prepare minutes of these meetings and submit to the City for approval within five (5) business days after the meeting.

The Consultant shall prepare a monthly status report and deliver to the City a minimum of three (3) business days prior to the monthly status meeting. The status report shall summarize work completed for the current month and work scheduled for the upcoming month. The current months invoice shall accompany the status report.

Deliverables: Prepare and distribute monthly status reports and project invoices.
Prepare and distribute meeting minutes within five (5) business days of meeting.

1.3d Public Outreach

In cooperation with the City, the Consultant will participate in a public information and involvement program. Tasks to be accomplished by the Consultant during the planning phase include:

1. The Consultant shall develop content for and assist with maintaining a project website (ArcGIS StoryMap) describing the project, potential improvements.

2. The Consultant shall prepare exhibits or other presentation material (i.e. MS Power Point slides) and participate in public information meetings. The meeting location shall be reserved and coordinated by the City. The Consultant will be available during the public meeting to collect public input (reported flooding locations, structural flooding, etc.). All input collected during the meeting shall be summarized in meeting minutes.

1.3e Grant Assistance

The Consultant will assist the City with grant (or other types of) funding opportunities from State and Federal agencies including but not limited to EDA, RIA, USDA, SCDOT, FEMA. SCEMD, and CDBG. The Consultant will provide funding application support including but not limited to application preparation, narratives, cost estimates, benefit analysis, maps, and exhibits.

1.3f Miscellaneous Consulting

The Consultant will assist the City (as requested) with miscellaneous consulting services related to the project.

Based on the outcome of the preceding tasks and the recommended improvements to be implemented as Phase 1, the Consultant will provide the City with a detailed scope and fee estimate for the preliminary and final design phases, bidding and negotiation phase, and construction phase for the Phase 1 improvements. It is anticipated that the future project phases will include the following:

Preliminary and Final Design Phase
- Geotechnical Investigation
- Wetland/Critical Area Delineation
- Design Survey
- Subsurface Utility Engineering (SUE)
  - Utility Coordination
  - Potholing
- Final Design
  - Modeling (update)/Calculations
  - Final Design Report
  - Plans Development (60% and 90% Plans)
  - Stormwater Pollution Prevention Plan (SWPPP)
- Technical Specifications
- Refine Opinion of Probable Construction Cost
- Permitting/Approvals
  - USACE
  - SCDHEC/OCRM/CZC/BOW/NPDES CGP
  - SCDOT
  - City of Charleston Engineering/MS4
  - CWS
  - SCE&G/Dominion

Telephone/AT&T
Property/Easement Acquisition

Bidding and Negotiation Phase
Bidding Phase
100% Plans
Final Opinion of Probable Construction Cost
Prepare bid documents
Bidding Coordination and/or Support
Negotiation Phase
Contracting Support

Construction Phase
Construction Phase
Pre-construction Services
Construction Engineering and Inspection (CEI) Services
Material Testing
Contractor Payment Coordination
Close-Out Phase
Final Inspection
As-Built Drawings
Permit Terminations

Deliverables: Future consulting phases scope and fee estimate.

THOMAS & HUTTON

Windermere Neighborhood Drainage Improvement Project Study and Conceptual Design

City of Charleston

ID	Task Name	Duration
1	**Notice to Proceed**	**0 edays**
2	**Study**	**110 days**
3	Data Collection	21 edays
4	Study Survey	21 edays
5	Existing Conditions H&H Modeling	30 edays
6	Alternatives Analysis	30 edays
7	Proposed Improvements H&H Modeling	30 edays
8	Recommendations	30 edays
9	**Conceptual Design - Phase 1**	**25 days**
10	Conceptual Design	21 edays
11	Opinion of Probable Construction Cost	14 edays
12	**Project Mgmt. & Coord. Phase (Study & Phase 1)**	**140 days**
13	Project Management	197 edays
14	Quality Control and Quality Assurance	197 edays
15	Project Meetings	197 edays
16	Public Outreach	197 edays
17	Grant Assisance	197 edays
18	Miscellaneous Consulting	197 edays

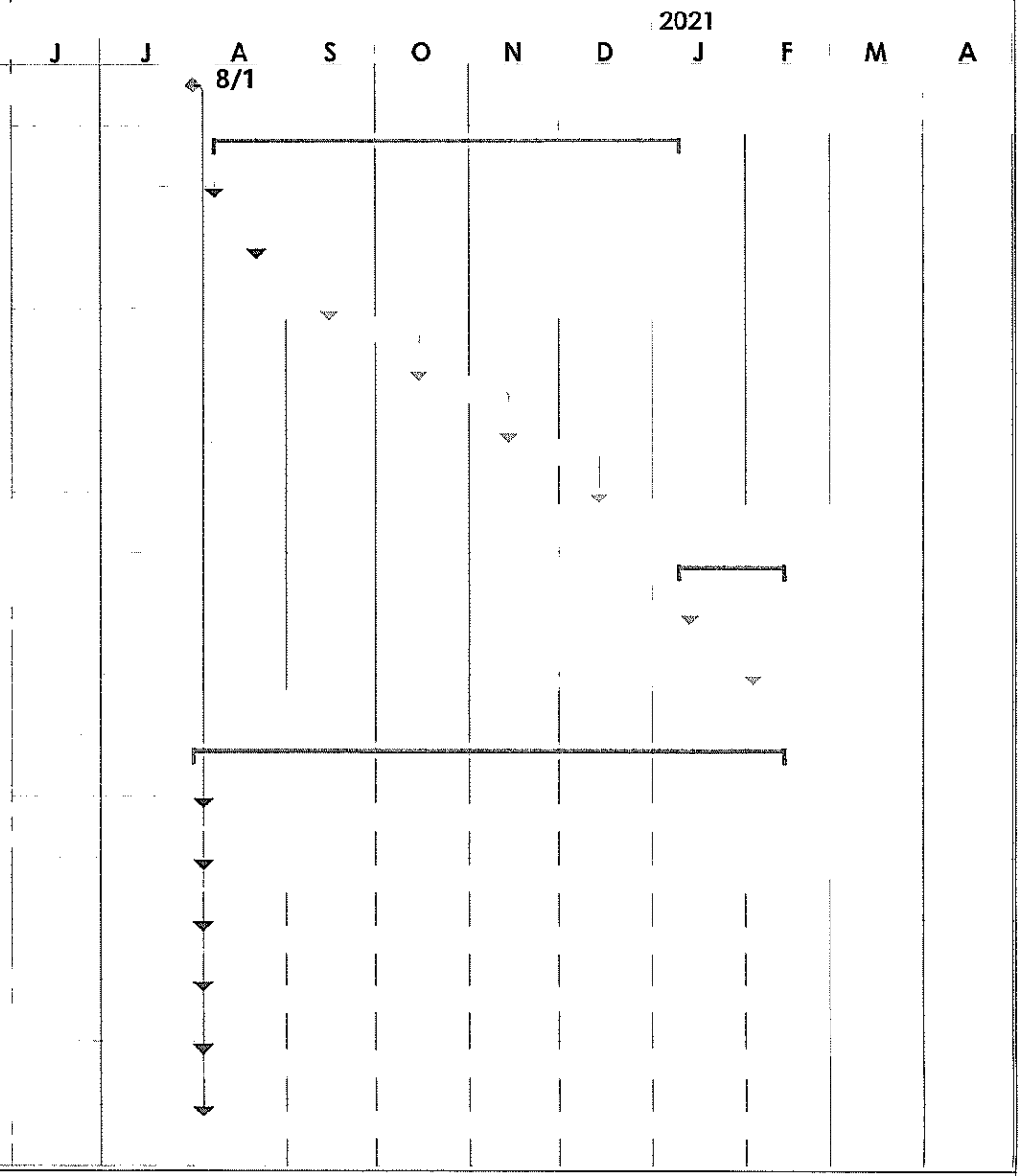

THOMAS & HUTTON

City of Charleston, SC
Windermere Neighborhood Drainage Improvement Project
Proposed Engineering Fee Breakdown

Phase/Task	Thomas & Hutton Labor													Sub-consultants						
	Principal-in-charge (PM IV)	Project Manager (PE III)	Project Designer (D I)	CAD Tech III	Lead Structural Eng.	Structural Eng. (D II)	Survey Manager (SM II)	Survey Party (2-men)	Survey Tech III	GIS Analyst II	Field Rep. IV	Admin Clerical III	TOTAL LABOR	Wetlands (D&D)	Geotechnical (Terracon)	SUE (West)	Video Inspections (ProLateral)	Reimbursables	TOTAL TASK	TOTAL TASK (Rounded for Proposal)
Hourly Rate:	$190.00	$165.00	$110.00	$100.00	$175.00	$120.00	$165.00	$150.00	$100.00	$120.00	$130.00	$85.00								
Study and Conceptual Design Phase																				
1.1 - Study																			$5,595	$5,600
1.1a - Data Collection																				
Data Collection	2	4	9							9			$3,110					$100	$3,210	
Preliminary Utility Coordination		9		9									$2,385						$2,385	
1.1b - Study Survey																			$26,365	$26,400
Field Survey	2						2	40	9				$7,610						$7,610	
Additional Data Collection		9											$1,485			$5,000	$8,000	$200	$14,685	
Property Plat Research							18		9				$3,870					$200	$4,070	
1.1c - Hydrologic and Hydraulic Model																			$26,010	$26,100
Existing Conditions Hydrologic and Hydraulic Model	2	18	40										$7,750						$7,750	
Alternatives Analysis	9	40	20										$10,510						$10,510	
Proposed Conditions Hydrologic and Hydraulic Model	2	18	40										$7,750						$7,750	
1.1d - Recommended Improvements																			$13,755	$13,800
Recommended Improvements	4	9	40	9									$7,545						$7,545	
Preliminary Engineering Report	2	9	20							9		9	$5,910					$300	$6,210	
1.2 - Conceptual Design - Phase 1																				
1.2a - Conceptual Layout																			$8,005	$8,100
Design (30%)	4	9	40	9							2		$7,805					$200	$8,005	
1.2 - Conceptual Opinion of Probable Construction Cost																			$2,200	$2,200
Opinion of Probable Construction Cost	2	4	9									2	$2,200						$2,200	
1.3 - Project Management and Coordination (T&E)																				
																			$37,400	$37,400
Project Management	9	20											$5,010						$5,010	
QA/QC	9	9											$3,195						$3,195	
Project Administration and Meetings	4	40											$7,360					$500	$7,860	
Public Outreach	4	18								40			$8,530					$1,000	$9,530	
Grant Assistance		9	18							9			$4,545						$4,545	
Miscellaneous Consulting	4	20	20										$6,260					$1,000	$7,260	
Total Hours	59	245	256	27	0	0	20	40	18	67	2	11								
TOTAL	$11,210	$40,425	$28,160	$2,700	$0	$0	$3,300	$6,000	$1,800	$8,040	$260	$935	$102,830	$0	$0	$5,000	$8,000	$3,500	$119,330	$119,600

CERTIFICATE OF LIABILITY INSURANCE

DATE (MM/DD/YYYY): 02/13/2020

THIS CERTIFICATE IS ISSUED AS A MATTER OF INFORMATION ONLY AND CONFERS NO RIGHTS UPON THE CERTIFICATE HOLDER. THIS CERTIFICATE DOES NOT AFFIRMATIVELY OR NEGATIVELY AMEND, EXTEND OR ALTER THE COVERAGE AFFORDED BY THE POLICIES BELOW. THIS CERTIFICATE OF INSURANCE DOES NOT CONSTITUTE A CONTRACT BETWEEN THE ISSUING INSURER(S), AUTHORIZED REPRESENTATIVE OR PRODUCER, AND THE CERTIFICATE HOLDER.

IMPORTANT: If the certificate holder is an ADDITIONAL INSURED, the policy(ies) must have ADDITIONAL INSURED provisions or be endorsed. If SUBROGATION IS WAIVED, subject to the terms and conditions of the policy, certain policies may require an endorsement. A statement on this certificate does not confer rights to the certificate holder in lieu of such endorsement(s).

PRODUCER
Sterling Seacrest Partners, Inc
P O Box 8004
Savannah GA 31402-8004

CONTACT NAME: Ann Davis
PHONE (A/C, No, Ext): (912) 544-1900 FAX (A/C, No): (912) 544-1901
E-MAIL ADDRESS: adavis@sspins.com

INSURED
Thomas & Hutton Engineering Co.
50 Park of Commerce Way
Savannah GA 31405

INSURER(S) AFFORDING COVERAGE	NAIC #
INSURER A: Zurich American Insurance Company	16535
INSURER B: Travelers Property and Casualty Ins Co.	36161
INSURER C:	
INSURER D:	
INSURER E:	
INSURER F:	

COVERAGES **CERTIFICATE NUMBER:** 20-21 Master **REVISION NUMBER:**

THIS IS TO CERTIFY THAT THE POLICIES OF INSURANCE LISTED BELOW HAVE BEEN ISSUED TO THE INSURED NAMED ABOVE FOR THE POLICY PERIOD INDICATED. NOTWITHSTANDING ANY REQUIREMENT, TERM OR CONDITION OF ANY CONTRACT OR OTHER DOCUMENT WITH RESPECT TO WHICH THIS CERTIFICATE MAY BE ISSUED OR MAY PERTAIN, THE INSURANCE AFFORDED BY THE POLICIES DESCRIBED HEREIN IS SUBJECT TO ALL THE TERMS, EXCLUSIONS AND CONDITIONS OF SUCH POLICIES. LIMITS SHOWN MAY HAVE BEEN REDUCED BY PAID CLAIMS.

INSR LTR	TYPE OF INSURANCE	ADDL INSD	SUBR WVD	POLICY NUMBER	POLICY EFF (MM/DD/YYYY)	POLICY EXP (MM/DD/YYYY)	LIMITS	
A	[X] COMMERCIAL GENERAL LIABILITY [ ] CLAIMS-MADE [X] OCCUR GEN'L AGGREGATE LIMIT APPLIES PER: [ ] POLICY [X] PRO-JECT [ ] LOC [ ] OTHER:	Y		GLO 0215307-02	03/01/2020	03/01/2021	EACH OCCURRENCE	$ 1,000,000
							DAMAGE TO RENTED PREMISES (Ea occurrence)	$ 300,000
							MED EXP (Any one person)	$ 10,000
							PERSONAL & ADV INJURY	$ 1,000,000
							GENERAL AGGREGATE	$ 2,000,000
							PRODUCTS - COMP/OP AGG	$ 2,000,000
							Employee Benefits	$ 1,000,000
A	AUTOMOBILE LIABILITY [X] ANY AUTO [ ] OWNED AUTOS ONLY [ ] SCHEDULED AUTOS [X] HIRED AUTOS ONLY [X] NON-OWNED AUTOS ONLY	Y		BAP 0215308-02	03/01/2020	03/01/2021	COMBINED SINGLE LIMIT (Ea accident)	$ 1,000,000
							BODILY INJURY (Per person)	$
							BODILY INJURY (Per accident)	$
							PROPERTY DAMAGE (Per accident)	$
							Medical payments	$ 5,000
B	[X] UMBRELLA LIAB [X] OCCUR [ ] EXCESS LIAB [ ] CLAIMS-MADE [ ] DED [X] RETENTION $ 10,000			ZUP-21P19575-20-NF	03/01/2020	03/01/2021	EACH OCCURRENCE	$ 5,000,000
							AGGREGATE	$ 5,000,000
								$
A	WORKERS COMPENSATION AND EMPLOYERS' LIABILITY ANY PROPRIETOR/PARTNER/EXECUTIVE OFFICER/MEMBER EXCLUDED? (Mandatory in NH) Y/N [N] If yes, describe under DESCRIPTION OF OPERATIONS below	N / A	Y	WC 0215306-02	03/01/2020	03/01/2021	[X] PER STATUTE [ ] OTH-ER	
							E.L. EACH ACCIDENT	$ 1,000,000
							E.L. DISEASE - EA EMPLOYEE	$ 1,000,000
							E.L. DISEASE - POLICY LIMIT	$ 1,000,000

DESCRIPTION OF OPERATIONS / LOCATIONS / VEHICLES (ACORD 101, Additional Remarks Schedule, may be attached if more space is required)

The following applies when required by written contract: City of Charleston is included as Additional Insured as respects Auto & General Liability (including ongoing and completed operations) policies. Umbrella follows form. General Liability is primary & non contributory. Waiver of Subrogation applies in favor of Additional Insured as respects the Auto & General Liability and Workers Compensation policies. The General Liability, Automobile Liability, and Workers' Compensation policies have been endorsed to provide the certificate holder (30) days notice of cancellation, except for non-payment, when required by written contract.

CERTIFICATE HOLDER

City of Charleston Procurement Division
75 Calhoun Street
Suite 3500
Charleston SC 29401

CANCELLATION

SHOULD ANY OF THE ABOVE DESCRIBED POLICIES BE CANCELLED BEFORE THE EXPIRATION DATE THEREOF, NOTICE WILL BE DELIVERED IN ACCORDANCE WITH THE POLICY PROVISIONS.

AUTHORIZED REPRESENTATIVE

© 1988-2015 ACORD CORPORATION. All rights reserved.

The ACORD name and logo are registered marks of ACORD

Attachment D:

City of Charleston
Minority/Women-Owned Business Enterprise (MWBE)
Compliance Provisions

This document shall be included with the submittal of the bid or offer. **If the bidder or offeror fails to submit the form with the bid or offer as required, the procurement officer shall deem the bid non-responsive or shall determine that the offer is not reasonably susceptible of being selected for award.**

APPLICATION:

Charleston City Council has adopted a policy setting 20% as the guidelines for combined women-owned and minority-owned business enterprise participation for this project.

Definitions:
MBE is defined as a small business owned and controlled by minorities.
WBE is defined as a small business owned and controlled by women.
This means that fifty-one percent (51%) of the business must be owned by minorities or women and that they must control the management and daily operations of the business.

The guidelines for participation in City of Charleston's contracts for services, including construction, are hereby made a part of any contract resulting from this solicitation. These requirements shall apply to all contracts and resulting subcontracts issued by contractors. A list of certified minority-owned and women-owned business enterprises can be found on the City of Charleston's web site www.charleston-sc.gov; or by contacting Ruth Jordan, MBE Manager, 2 George St., Ste. 3600 Charleston, SC 29401, (843) 724-7434, jordanr@charleston-sc.gov

COMPLIANCE REQUIREMENTS:

1. The Offeror shall provide, **with the submittal,** the following Affidavits properly executed which signify that the Offeror understands and agrees to the incorporated contract provisions:

☑ **Affidavit A** - ***Listing of the Good Faith Effort & Identification of Minority and Women-owned Business Participation*** as certification that efforts were made to use MWBE businesses on this project,

AND

☑ **Affidavit B** – ***Work to be Performed by Minority and/or Women-owned Firms***

OR

☐ **Affidavit C** – ***Intent to Perform Contract with Own Workforce***, in making this certification the Offeror states that the Offeror does not customarily subcontract elements of this type project and will perform all elements of the work with his/her own current work forces.

2. All affidavits supplied by the Offeror shall become a part of the agreement between the Contractor and the City of Charleston for performance of this contract. Failure to comply with any of these statements, certifications, or intentions stated in the Affidavits, or with the MBE/WBE provisions shall constitute a breach of the contract. Any such breach may result in termination of the contract in accordance with the termination provisions contained in the contract. It shall be solely at the option of the City of Charleston whether to terminate the contract for breach. In addition, any breach may result in the bidder being prohibited from participation in future construction bids as determined by the City of Charleston.

The Contractor shall provide an itemized statement of payments to each MBE and WBE subcontractor before final payment is processed.

Name of Company: Thomas & Hutton Engineering Co.

Signature — Tony M. Woody (Print Name)

V.P. (Title) — 8.18.2020 (Date)

Attest:

AFFIDAVIT A

City of Charleston, South Carolina Listing of the Good Faith Effort

Affidavit of Thomas & Hutton Engineering Co.
(Name of Offeror)

I have made a good faith effort to comply under the following checked areas:
(A minimum of 6 areas must be checked in order to have achieved a "good faith effort")

✓ 1 Contacted MBE businesses that reasonably could have been expected to submit a quote and that were known to the contractor, or available on Federal, State or local government maintained lists, at least 10 business days before the submittal date and notified them of the nature and scope of the work to be performed. ***Complete Affidavit A, Page 2.***

✓ 2. Followed up with contacted MBE subsequent to the initial contact and at least 72 hours prior to submittal deadline/bid opening either by phone, facsimile or in person.

○ 3. Made the construction plans, specifications, and requirements available for review by prospective MBE businesses, or providing these documents to them at least 10 business days before the submittal deadline/bid opening.

✓ 4. Itemized elements of the work or combined elements of the work into economically feasible units to facilitate minority participation.

✓ 5. Attended pre-solicitation meetings scheduled by the City.

6. Provided MBE with assistance in getting required bonding or insurance requirements or provided alternatives to bonding or insurance for subcontractors.

✓ 7. Negotiated in good faith with interested MBEs and did not reject them as unqualified without sound reasons based on their capabilities. ***(Any rejection of a minority or woman business based on lack of qualifications shall include reasons for rejection documented in writing.)***

○ 8. Provided MBEs with assistance in need of equipment, loan capital, lines of credit, or joint pay agreements to secure loans, supplies, or letters of credit, including waiving credit that is ordinarily required. Assisted MBEs in obtaining the same unit pricing with the Offeror's suppliers in order to help such businesses in establishing credit.

○ 9. Provided training or mentoring to at least two (2) MBEs within 120 days prior to submittal deadline/bid opening. The training or mentoring program should be in conjunction with local trade groups, technical schools or community organizations that provide recruitment, education or skill levels.

✓ 10. Negotiated joint venture, partnership or other similar arrangements with MBEs in order to increase opportunities for minority business participation.

○ 11. Provided quick pay agreements and policies to enable minority contractors and suppliers to meet cash-flow demands.

The undersigned hereby agrees to enter into a formal agreement with the firms listed in Affidavit B Work to be performed by Minority Firms conditional upon execution of a contract with the Owner. Failure to abide by this provision will constitute a breach of the contract.

The undersigned hereby certifies that he/she has read the terms of the minority business commitment and is authorized to bind the Offeror to the commitment herein set forth.

Date: 8/18/2020 Name of Authorized Officer (Print/Type): Tony M. Hoody

Signature: [signature]

Title: V.P.

AFFIDAVIT A

City of Charleston, South Carolina Minority Business Participation Efforts

(Use as many sheets as necessary)

I, Tony M. Woody, hereby certify that on this project we contacted the following minority business enterprises as subcontractors, vendors, suppliers, or providers of professional services.

1. Minority Firm Name and Contact D&D West, Lori Duncan	**Minority Firm Address** 814 West Madison Ave. Charleston, SC 29412
Minority Firm Telephone Number (843) 270-4857 **Minority Firm Fax Number** **DBE Certification Number** 06-0716019-1608	**Minority Group Type** ☐ (African American) ☑ (Women) ☐ (Asian American) ☐ (Hispanic) ☐ (American Indian) ☐ (Other) ☐ Follow up Verification
2. Minority Firm Name and Contact	**Minority Firm Address**
Minority Firm Telephone Number **Minority Firm Fax Number** **DBE Certification Number**	**Minority Group Type** ☐ (African American) ☐ (Women) ☐ (Asian American) ☐ (Hispanic) ☐ (American Indian) ☐ (Other) ☐ Follow up Verification
3. Minority Firm Name and Contact	**Minority Firm Address**
Minority Firm Telephone Number **Minority Firm Fax Number** **DBE Certification Number**	**Minority Group Type** ☐ (African American) ☐ (Women) ☐ (Asian American) ☐ (Hispanic) ☐ (American Indian) ☐ (Other) ☐ Follow up Verification
4. Minority Firm Name and Contact	**Minority Firm Address**
Minority Firm Telephone Number **Minority Firm Fax Number** **DBE Certification Number**	**Minority Group Type** ☐ (African American) ☐ (Women) ☐ (Asian American) ☐ (Hispanic) ☐ (American Indian) ☐ (Other) ☐ Follow up Verification

We certify, under penalties of perjury, that we have examined the information in this affidavit, and to the best of our knowledge and belief, this information is true, correct and complete.

Date 8-18 2020 Name of Authorized Officer (Print/Type) Tony M. Woody

Sworn to before me this 18TH day of AUGUST, 20 20

Signature

Notary Public for the State of SOUTH CAROLINA

My Commission Expires 4-22-2022

Title 8-18-2020

Print Name. KEN E. NAGEL

Phone Number 843-725-5235

Address 682 JOHNNIE DODDS BLVD STE 100 MT. PLEASANT, SC 29464

Notary Seal:

KEN E. NAGEL NOTARY My Comm. Exp. 04/22/2022 PUBLIC SOUTH CAROLINA

10 23 0

AFFIDAVIT B

City of Charleston, South Carolina
Work to be Performed by Minority Businesses

Affidavit of Thomas & Hutton Engineering Co. (Name of Offeror). I hereby certify that on the Windermere Neighborhood Drainage Project (Project Name), Total Project Amount $ Unknown

I will make a good faith effort to expend a minimum of 4 % of the total dollar amount of the contract with minority business enterprises. Minority businesses will be employed as subcontractors, vendors, suppliers, or providers of professional services. Such work will be subcontracted to the following firms listed below:

(Attach additional sheets if needed)

Name and Phone Number	*Minority Code	Work Description	Dollar Value
Lori Duncan D&D West, 843-270-4857	W	Wetlands / Critical Area Delineations & Permitting	$ Unknown
			$
			$
			$
			$
			$
			$

Total MBE Participation: 4 % $ Unknown

* Minority categories: African American (B); Hispanic (H); Asian American (A), American Indian (I); Woman Owned (W); Other (D)

The undersigned will enter into a formal agreement with minority firms for work listed in this schedule conditional upon execution of a contract with the Owner.

The undersigned hereby certifies that he/she has read the terms of this commitment and is authorized to bind the Offeror to the commitment set forth herein. We certify, under penalties of perjury, that we have examined the information in this affidavit, and to the best of our knowledge and belief, this information is true, correct and complete.

Date 8-18-2020 Name of Authorized Officer (Print/Type) Tony M. Hood

Signature

Title VP

Sworn to before me this 18TH day of AUGUST, 2020 Notary Public for the State of SOUTH CAROLINA

My Commission Expires 4-22-2022

Print Name KEN E. NAGEL

Phone Number 843-324-8585

Address 682 JOHNNIE DODD BLVD SUITE 100 MT. PLEASANT, SC 29464

Notary Seal:

KEN E. NAGEL NOTARY PUBLIC SOUTH CAROLINA My Comm. Exp. 04/22/2022

AFFIDAVIT C

City of Charleston, South Carolina
Intent to Perform Contract with Own Workforce.

Affidavit of _____
(Name of Offeror)

I hereby certify that it is our intent to perform 100% of the work required for the _____

_____
contract.
(Name of Project)

In making this certification, the Offeror states that the Offeror does not customarily subcontract elements of this type project, and normally performs and has the capability to perform and will perform *all the elements of the work* on this project with his/her own current work forces, and

The Offeror agrees to provide any additional information or documentation requested by the Owner in support of the above statement.

The undersigned hereby certifies that he/she has read this certification and is authorized to bind the Offeror to the commitments contained herein. We certify, under penalties of perjury, that we have examined the information in this affidavit, and to the best of our knowledge and belief, this information is true, correct and complete.

Date:_____ Name of Authorized Officer (Print/Type):_____

Signature:_____

Title:_____

Sworn to before me this day of , 20 Notary Seal:
Notary Public for the State of
My Commission Expires
Print Name
Phone Number
Address

16.)

CPR COMMITTEE and/or COUNCIL AGENDA

TO: John J. Tecklenburg, Mayor

FROM: Edmund Most / Andrew Jones **DEPT.** Parks – Capital Projects

SUBJECT: INTERNATIONAL AFRICAN AMERICAN MUSEUM CONSTRUCTION MANAGEMENT FEE AMENDMENT #1

REQUEST: Approval of Fee Amendment #1 to the Construction Management Contract with Cumming Construction Management, Inc., in the amount of $296,492.00 for an extension of program management services to June 30, 2021, cost management/estimating services for the Lobby revisions and budget analysis and reconciliation services by CS&L.

COMMITTEE OF COUNCIL: Ways & Means **DATE:** September 8, 2020

COORDINATION: This request has been coordinated with: *(attach all recommendations/reviews)*

	Yes	N/A	Signature of Individual Contacted	Attachment
CPR Committee Chair	☐	☐	Amy Wharton	☐
Corporate Counsel	☐	☐	[illegible]	☐
Capital Projects Director	☒	☐	[illegible]	☐
MBE Manager	☐	☐		☐

FUNDING: Was funding previously approved? Yes ☒ No ☐ N/A ☐

If yes, provide the following: Dept/Div Parks-Capital Projects Acct # 051405-58206

Balance in Account $296,492.00 Amount needed for this item $296,492.00

Project Number CP1425

NEED: Identify any critical time constraint(s).

CFO's Signature: Amy Wharton

FISCAL IMPACT: **Approval of Fee Amendment will increase the Construction Management Contract by $296,492.00 (from $767,689.00 to $1,064,181.00). Funding sources for this project are: Accommodations Tax ($13,200,000.00), Charleston County Accommodations Tax ($12,500,00.00), State Funding ($14,000,000.00), IAAM Contributions ($53,000,000.00).**

Mayor's Signature: [signature]

John J. Tecklenburg, Mayor

ORIGINATING OFFICE PLEASE NOTE: A FULLY STAFFED/APPROVED (except Mayor's Signature) PACKAGE IS DUE IN THE CLERK OF COUNCIL'S OFFICE NO LATER THAN 10:00 A.M THE DAY OF THE CLERK'S AGENDA MEETING.

City of Charleston
Contract Amendment for Professional Services #01

Project: (IAAM) International African American Museum – CP1425

Owner: City of Charleston
Division of Capital Projects
823 Meeting Street
Charleston, SC 29403

A/E: Cumming Construction Management, Inc.
3829 Faber Place Drive Suite 600
North Charleston, SC 29405

Contract Date: July 16, 2019
Amendment Date: September 8, 2020

To the A/E: You are hereby authorized, subject to contract provisions, to make the following changes:

1. Description of the Contract Amendment:

This amendment increases the contract by **$296,492.00** as described in Cumming Construction Management's Amendment #1 Request titled, *Proposal Request for an extension of program management services dated: July 27, 2020.*

Total Contract Increase with Cumming is **$296,492.00**

2. Adjustments to the Contract Sum:

Original Contract Sum authorized by Council for Schematic Design through Construction Admin.	$ 767,689.00
Change by Previously Approved Contract Amendments.....	$ 0.00
Contract Sum prior to this Contract Amendment.....	$ 767,689.00
Amount of this contract Amendment, complete.....	$ 296,492.00
New Contract Sum, including this Contract Amendment	$ 1,064,181.00

ARCHITECT/ ENGINEER: _____ (Cumming Construction Management) 7/27/20 (Date)

OWNER: _____ John Tecklenburg, Mayor _____ (Date)

FEE AMENDMENT NO. 1

City of Charleston
Department of Parks
Attn: Mr. Edmund Most
823 Meeting Street
Charleston, SC 29403

CONSTRUCTION MANAGER:
Cumming Construction Management, Inc.
3820 Faber Place Drive, Suite 600
N. Charleston, SC 29405

DATE OF AGREEMENT: July 16, 2019

DATE OF CHANGE ORDER: July 27, 2020

REFERENCE: Proposal request for an extension of Program Management Services

DESCRIPTION OF CHANGE:

The City of Charleston (City) has requested from the Program Manager (Cumming) a proposal for program management services for the International African American Museum (IAAM) to provide extended services. Current contract is scheduled to expire December 31, 2020. Due to unforeseen circumstances during construction, and by no fault of the Program Manager, the projects anticipated completion is now June 2021.

This proposal extends the current staffing from January 1, 2021 to June 30, 2021 and the cost management/estimating services for the Lobby revisions. Also included per the IAAM and City's request, the services of CS&L (Matthew Snellgrove), to provide budget analysis and budget reconciliation for the City and IAAM budgets. CS&L includes services for five months (August 2020 to December 2020) and three trips for Charleston meetings. See attached CS&L Proposal dated July 1, 2020.

In compliance with Contract, dated July 16, 2019. Article 2, G., the CM shall be entitled to additional compensation of required to provide services beyond those Services set forth in Exhibit A. The CM shall be compensated for these additional services as agreed by both parties based on projected time and expense for the additional services as outlined in Attachment 4 (Project Management Plan).

COST OF CHANGE: $ 296,492.00

SCHEDULE FOR COMPLETION: June 30, 2021

PAYMENT SCHEDULE: See attached Draw Schedule

FUNDING SOURCE: CP1425

July 1, 2020

City of Charleston
Department of Parks
Charleston, SC 29403
Attn: Edmund Most

Re: International Africian American Museum (IAAM)
IAAM Management Support for Construction Advisory Services Proposal

Dear Mr. Most,

I am delighted to provide you with project support services to you for the execution of the IAAM project during the Construction Phase. Below is an outline of our scope of services that will provide you with the additional support you need and assist the City the role of executing the construction and capital improvements to develop the IAAM. If you need continuing services for advisory services during exhibit implementation and/or the close out of the construction, we would be happy to provide a scope and porposal for such services at that time and look forwrad to working with the City of Charleston.

Scope of Services

- Budget analysis for the division of financial management between the City and IAAM
- Budget cost review and cashflow tracking as necessary to reconcile prior records to current projections.
- Cost / risk recommendations for budget contingencies and budget line item reallocations.
- Financial and budget resource to City of Charleston Chief Financial Officer and staff.
- Review applicable designer additional service requests as the related to historic knowledge of work completed and services that are due.
- Provide any prior and legacy project decisions / direction advise and consultation to City of Charleston and Cummings, the City's project respresentative.
- Work cooperately with City project management firm, design team and construstion manager to help resolution of any outstanding issues that require the project experience to expedite resolution.
- Review and advise on any project schedule integration between the exhibit activities and construction activities so City and its project respresentative is aware of risks, challenges so this can be incorporated into the budget or related to requested budget revisions.
- Services are based on schedule and limited to seven months (July 2020 to December 2020) assuming there are no more than two months of services not needed thus billing will be skipped those months.. Travel is currently anticipated for the last 3 months of the service due to COVID-19 issues and restrictions.

OWNER RESPONSIBILITIES

1. The owner shall approve the budget and design for each project based on consultation with the project manager. The budget shall include the construction costs, other costs with are the responsibil'ty of the owner, and reasonable contingencies
2. The owner shall furnish such legal, accounting, zoning, expediting, and insurance counseling services as may be necessary for the project, including such auditing services as the owner may require to verify an application for payment or to ascertain how or for what purposes a contractor has used monies paid by or behalf of the owner
3. The owner shall use its commercially reasonable efforts to furnish the required information and shall render approvals, disapprovals and decisions as expeditiously as reasonably necessary for the orderly progress of services and work of the consultants, contractors, and/or vendors. The owner agrees that

providing Legends with as much background related to approvals, negotiations, or any other conversations that are material to the project should be communicated.
4. The owner is responsible for the employment of project architects, engineers, other consultants, and contractors as necessary to complete the project.
5. The City representative and design consultants will ensure that all necessary permits and other governmental approvals, consents, authorizations, licenses or other legal requirements, required permits and inspections that may be required by any governmental authority, have or will be obtained.

If requested, hourly additional services for calendar year 2020 (with 2021 to be within approximately 5% of listed rates) will be billed at hourly rates as follows:

Hourly Rate Schedule

• President	$375
• Senior Vice-President	$350
• Vice-President	$250
• Project Managers	$175
• Assistant Project Managers	$125
• Admin / Project Support	$ 95

No additional services will be incurred without the prior approval of the City representative and approved additional service agreement, purchase order, or other appropriate form of agreement. For purposes of this scope of services, the City Representative is Edmund Most.

We are proposing a total fee of $39,200 to be billed in equal payments of $7,000 for five months starting June 2020 through October 2020. Within the total fee, $4,200 reserved for travel that will be billed in lump sums of $1,400 each for no more than three (3) trips of 1 person for 2 days to Charleston for meetings on site meetings. Any travel expenses that exceed this allowance will be billed at actual costs. Other costs such as in-house reproduction, communication expenses are part of the lump sum fee. Any subconsultant services needed will be in addition to our fee and will be submitted to client for additional service and approval.

We look forward to working with you, and thank you for the opportunity to offer our services.

Sincerely,

Matthew Snellgrove
VP of Program Management

cc: Paula Portz

Cumming Constr, Mgmt.

City of Charleston
IAAM
Fee Amendment #01
Draw Schedules

July 27, 2020

MONTH	AMOUNT	NOTES
Aug-20	$ 10,240	Inc. CS&L and Lobby Estimate only
Sep-20	$ 7,000	Inc. CS&L and travel only
Oct-20	$ 8,400	Inc. CS&L and travel only
Nov-20	$ 8,400	Inc. CS&L and travel only
Dec-20	$ 8,400	Inc. CS&L and travel only
Jan-21	$ 42,092	
Feb-21	$ 42,592	
Mar-21	$ 42,092	
Apr-21	$ 42,592	
May-21	$ 42,092	
Jun-21	$ 42,592	
Totals	$ 296,492	

CPR COMMITTEE and/or COUNCIL AGENDA

TO: John J. Tecklenburg, Mayor

FROM: Edmund Most / Sarah Myers **DEPT.** Parks – Capital Projects

SUBJECT: INTERNATIONAL AFRICAN AMERICAN MUSEUM GMP CHANGE ORDER #4 - TURNER CONSTRUCTION COMPANY

REQUEST: Approval of Change Order #4 with Turner Construction Company in the amount of $435,549.00 for costs to initiate the utility rough-ins for the lobby and kitchen design changes requested by the IAAM ($32,056.00) and costs to complete all lobby and kitchen modifications requested by the IAAM which include plumbing revisions for the restroom reconfiguration, changes to the kitchen/dining area, utilities for food service additions and other general design adjustments to the design on the second/third level ($403,493.00).

COMMITTEE OF COUNCIL: Ways & Means **DATE:** September 8, 2020

COORDINATION: This request has been coordinated with: *(attach all recommendations/reviews)*

	Yes	N/A	Signature of Individual Contacted	Attachment
CPR Committee Chair	☐	☐	Amy Wharton	☐
Corporate Counsel	☐	☐	[illegible]	☐
Capital Projects Director	☒	☐	[illegible]	☐
MBE Manager	☐	☐		☐

FUNDING: Was funding previously approved? Yes ☒ No ☐ N/A ☐

If yes, provide the following: Dept/Div Parks-Capital Projects Acct # 051405-58240

Balance in Account $435,549.00 Amount needed for this item $435,549.00

Project Number CP1425

NEED: Identify any critical time constraint(s).

CFO's Signature: Amy Wharton

FISCAL IMPACT: **Approval of Change Order #4 will increase the Guarantee Maximum Price (GMP) Contract by $435,549.00 (from $58,457,323 to $58,892,872). This change order is fully funded by the IAAM. Funding sources for this project are: Accommodations Tax ($13,200,000.00), Charleston County Accommodations Tax ($12,500,00.00), State Funding ($14,000,000.00), IAAM Contributions ($53,000,000.00).**

Mayor's Signature: [signature]
John J. Tecklenburg, Mayor

ORIGINATING OFFICE PLEASE NOTE: A FULLY STAFFED/APPROVED (except Mayor's Signature) PACKAGE IS DUE IN THE CLERK OF COUNCIL'S OFFICE NO LATER THAN 10:00 A.M THE DAY OF THE CLERK'S AGENDA MEETING.

AIA® Document G701/CMa™ – 1992

Change Order - Construction Manager-Adviser Edition

PROJECT *(Name and address)*:
International African American Museum
14 Wharfside Street

CHANGE ORDER NUMBER: 004
INITIATION DATE: August 3, 2020

OWNER: ☒
CONSTRUCTION MANAGER: ☒
ARCHITECT: ☒
CONTRACTOR: ☒
FIELD: ☐
OTHER: ☐

TO CONTRACTOR *(Name and address)*:
Turner Construction Company
4601 Park Road, Suite 601
Charlotte, NC 28209

PROJECT NUMBERS: CP1425 /
CONTRACT DATE: July 11, 2019
CONTRACT FOR: General Construction

THE CONTRACT IS CHANGED AS FOLLOWS:

COR No. 052 - Request to Initiate Rough-ins for Bulletin #15. Includes utility rough-ins for the scope of changes included in Bulletin #15: $32,056.00
COR No. 055 - Bulletin #15 - Full Scope. Includes changes to the GMP Design: plumbing revisions for the restroom reconfiguration and the changes to the Kitchen/dining area, utilities for food service additions, and other general design adjustments to design on the second/third level: $403,493.00

TOTAL CHANGE ORDER AMOUNT: $435,549.00

The original Guaranteed Maximum Price was	$	58,457,323.00
Net change by previously authorized Change Orders	$	0.00
The Guaranteed Maximum Price prior to this Change Order was	$	58,457,323.00
The Guaranteed Maximum Price will be increased by this Change Order in the amount of	$	435,549.00
The new Guaranteed Maximum Price including this Change Order will be	$	58,892,872.00

The Contract Time will be unchanged by Zero (0) days.
The date of Substantial Completion as of the date of this Change Order therefore is April 15, 2021

NOTE: This summary does not reflect changes in the Contract Sum, Contract Time or Guaranteed Maximum Price which have been authorized by Construction Change Directive.

NOT VALID UNTIL SIGNED BY THE OWNER, CONSTRUCTION MANAGER, ARCHITECT AND CONTRACTOR.

Cumming Construction Management, Inc.
CONSTRUCTION MANAGER *(Firm name)*
3820 Faber Place Drive, Suite 600
N. Charleston, SC 29405
ADDRESS

BY *(Signature)*
Rick W. Holt
(Typed name) **DATE:** 8/7/20

Moody Noland, Inc.
ARCHITECT *(Firm name)*
300 Spruce Street, Suite 300
Columbus, OH 43215
ADDRESS

Bernard Costantino
Digitally signed by Bernard Costantino
DN: C=US, E=bcostantino@moodynolan.com, O=Moody Nolan, OU=Moody Nolan Columbus Ohio, CN=Bernard Costantino
Date: 2020.08.04 12:43:40-04'00'

BY *(Signature)*
Robert Larrimer, AIA
(Typed name) **DATE:**

Turner Construction Company
CONTRACTOR *(Firm name)*
4601 Park Road, Suite 601
Charlotte, NC 28209
ADDRESS

City of Charleston
OWNER *(Firm name)*
823 Meeting Street
Charleston, SC 29403
ADDRESS

JEFFREY H. OWENS	
BY *(Signature)*	**BY** *(Signature)*
~~Bobby Teachey~~	Mayor John J. Tecklenburg
(Typed name)	*(Typed name)*
DATE: 8/6/2020 11:22 a.m.	**DATE:**

CUMMING

Change Order Proposal Review Form

To: Edmund V. Most
From: Jonathan Roberts
Date: 7/10/2020
Contractor: Turner Construction Company

Project: CP 1425 International African American Museum
Project No.: CP 1425
Proposal No.: Change Order Request No. 52
Contract: Construction
(CMR)(ARCHITECT)(ENGINEER)(OTHER)

Description of work to be performed: **Request to Initiate Rough-ins for Bulletin #15**

This request will cover the cost to initiate the lobby and kitchen changes requested by IAAM.

Bulletin #15 included changes to the GMP design: plumbing revisions for the restroom reconfiguration and the changes to the kitchen/ dinning area, utilities for food service additions, and other general design adjustments to the design on the second/ third level.

This COR ($32,056) would give the contractor approval to proceed with the utility rough-ins for the scope of changes included in the Bulletin #15. Approving this COR allows TB to install the rough-ins now while the elevated slabs are being installed. There will be a separate COR to include the cost of the full scope of Bulletin #15

A - Customer Requested Change
B - Code/Regulatory Agency Required Change
C - Errors and Omissions
D - Replacing Unsuitable Soils
E - Soils Related Change Other
F - Unforeseen Conditions
G - Time Related Change
H - Liquidated Damages
I - Value Engineering Change
J - Exercising Pre-Priced Option (Allowance)
K - Accounting Error
(Indicate Reason for Change Proposal)

Justification: A - Customer Requested Change

Attachments:

	J&A from Project Manager		Cost Estimate (Expected to Exceed $10,000)
	Independent Cost Estimate		Change Proposal Request from CMR with Detailed Backup
	Pre-Negotiation Position (PNP)	X	

Proposal Cost (not to exceed): $32,056.00 **Owner Contingency Allow. Bal.**
Time Extension Requested: **Time Extension Recommended:**

Special Circumstances: This change will net in a $0.00 contract modification as the $960,000.00 Owner Contingency allowance will be accessed to cover the cost of this scope.

Consequence of Rejection: Rejecting this COR would result in additional general conditions cost. If not approved there would be approximately a one month delay ($150,000 - $200,000) additional cost

Comments by Supervisor:

Approved:

(NO) (YES) (Circle One) — Rick Holt, Cumming Corp.

(NO) (YES) (Circle One) — Robert Faust, Cumming Corp.

(NO) (YES) (Circle One) — Edmund V. Most, City of Charleston

(NO) (YES) (Circle One) — SEE ATTACHED — Bernard Costantino, Moody Nolan

Decision needed by: July 16, 2020

(NO) (YES) (Circle One) Jonathan Roberts
Jonathan Roberts, Cumming Corp.

CUMMING

Change Order Proposal Review Form

To: Edmund V. Most
From: Jonathan Roberts
Date: 7/10/2020
Contractor: Turner Construction Company

Project: CP 1425 International African American Museum
Project No.: CP 1425
Proposal No.: Change Order Request No. 52
Contract: Construction
(CMR)(ARCHITECT)(ENGINEER)(OTHER)

Description of work to be performed: **Request to Initiate Rough-ins for Bulletin #15**

This request will cover the cost to **initiate** the lobby and kitchen changes requested by IAAM.

Bulletin #15 included changes to the GMP design: plumbing revisions for the restroom reconfiguration and the changes to the kitchen/ dinning area, utilities for food service additions, and other general design adjustments to the design on the second/ third level.

This COR ($32,056) would give the contractor approval to proceed with the utility rough-ins for the scope of changes included in the Bulletin #15. Approving this COR allows TB to install the rough-ins now while the elevated slabs are being installed. There will be a separate COR to include the cost of the full scope of Bulletin #15

A - Customer Requested Change
B - Code/Regulatory Agency Required Change
C - Errors and Omissions
D - Replacing Unsuitable Soils
E - Soils Related Change Other
F - Unforeseen Conditions
G - Time Related Change
H - Liquidated Damages
I - Value Engineering Change
J - Exercising Pre-Priced Option (Allowance)
K - Accounting Error
(Indicate Reason for Change Proposal)

Justification: **A - Customer Requested Change**

Attachments:

	J&A from Project Manager		Cost Estimate (Expected to Exceed $10,000)
	Independent Cost Estimate		Change Proposal Request from CMR with Detailed Backup
	Pre-Negotiation Position (PNP)	X	

Proposal Cost (not to exceed): $32,056.00 **Owner Contingency Allow. Bal.**
Time Extension Requested: **Time Extension Recommended:**

Special Circumstances: This change will net in a $0.00 contract modification as the $960,000.00 Owner Contingency allowance will be accessed to cover the cost of this scope.

Consequence of Rejection: Rejecting this COR would result in additional general conditions cost. If not approved there would be approximately a one month delay ($150,000 - $200,000) additional cost

Comments by Supervisor:

Approved:

(NO) (YES) (Circle One) — Rick Holt, Cumming Corp.

(NO) (YES) (Circle One) — Robert Faust, Cumming Corp.

(NO) (YES) (Circle One) — Edmund V. Most, City of Charleston

(NO) (YES) (Circle One) — Bernard Costantino, Moody Nolan

Decision needed by: July 16, 2020

(NO) (YES) (Circle One)

Jonathan Roberts
Jonathan Roberts, Cumming Corp.

Turner BROWN

COR #: 52 Opt 2

Date Submitted: July 13, 2020

TURNER BROWNSTONE
14 Wharf Street
Charleston, SC

To: Edmund Most
City of Charleston

Re: **Internation African American Muesum**

Bulletin 15 - Release of Rough In Work Only

Please find attached our Proposed Change Order (PCO) for the above described Work. We are submitting for your review and approval of the changed condition(s) as outlined herein. All work shall be performed under our current contract terms and as outlined below:

Work Description:	Rough-In Only - Mechanical, Electrical, Plumbing, Fire Protection Provide all required Labor, Materials, Equipment, and Administrative/Support costs to provide materials, labor, and equipment to drawing changes made in Bulletin 15. They will be per specs and drawings issued to Turner, scope of work as detailed within the Subcontractor's quote(s) &/or correspondence attached. The design has started and the will be submitted based on the new findings. Work in the field can not start with out signed change order. Remaining balance of Bulletin 15 to be reconciled in a future COR.

Reason: [X] Owner Directive [ ] Code / Regulatory [ ] Unforeseen Condition [ ] Design Issue

Pricing: [ ] ROM Estimate of GR's & Insurances [X] ROM Estimate for Entire PCO [X] Lump Sum or **Firm Fixed Unit Pricing** for Trade Contractors - See Detailed Estimates

Time Impact: [ ] Evaluating Potential for Time Impact [X] Evaluated - NO TIME IMPACT [0] Calendar Days Requested

[ ] Work has been Completed [ ] Work Has Commenced &/or is Ongoing [ ] Work Authorization is Requested By:

Submitted By: Contractor: **TURNER BROWNSTONE**

Walter Lewis Project Engineer — Dated 07/13/2020 — $ 32,056 Amount Requested

Requested Action: [ ] Authorized to Proceed While Pricing [ ] Price Only [ ] Do Not Proceed or Price

Reviewed By: Program Manager: **CUMMING**

Dated / /

Authorized Action: [ ] Authorized to Proceed While Pricing [ ] Price Only [ ] Do Not Proceed or Price

Approved By: Owner: **City of Charleston**

Edmund Most — Dated / / — $ 32,056 Amount Approved

Turner

Internation African American Muesum
General Summary of the Estimate

COR No.: 52 Opt 2

Item #	Description of Work		DETAIL ESTIMATE OF DIRECTS
A1	GENERAL REQUIREMENTS (GR's) & GENERAL CONDITIONS (GC'S)	SELF PERFORMED LABOR	$0
A2	GENERAL REQUIREMENTS (GR's) & GENERAL CONDITIONS (GC'S)	MATERIAL(S) & EQUIPMENT	$0
	TRADE DIRECTS		$29,500.00
A3	Contingency 3%		

A4 SUBTOTAL TRADE DIRECTS $29,500

A5

A6

A7

A8

A9

A14

A11

A14

A15

A16

A16

A17

		SUBTOTAL		$29,500
CCIP	@	2.45%	=	$722.75
Subguard	@	0.012	=	$354.00
Builders Risk	@	0.84%	=	$247.80
Performance and Payment Bond		0.00732	=	$215.94
Procore	@	0.04500%	=	$13.28
Overhead and Profit	@	3.25%	=	$1,002.23
		ESTIMATE TOTAL		$32,056

Turner

Internation African American Muesum
DETAIL ESTIMATE OF DIRECTS

COR No.: 52 Opt 2

DIVISIONS OF WORK	RATE	Unit	UNITS	SUBTOTAL	TOTAL	COMMENTS

GENERAL REQUIREMENTS (GR's) & GENERAL CONDITIONS (GC's)

DESCRIPTION

Due to additional scope of work and coordination in the Building	8,667.00	0	days	$0.00	
GENERAL REQUIREMENTS (GR's) & GENERAL CONDITIONS (GC's)					$0

TRADE DIRECTS

DESCRIPTION

Additional Scope of Work

	TCCO Bim Coordination - Alex Nash	$	-	0	HRS	$0.00	
1	1st Choice ROM *****	$	-	1	LS	$0.00	
2	Bulletin 15 Carolina Fire	$	7,500.00	1	LS	$7,500.00	
3	Donley - Bulletin 15	$	-	1	LS	$0.00	
4	CR - Hipp Bulletion 15 and 15.1	$	7,000.00	1	LS	$7,000.00	
5	P-Walls - Bulletin 15	$	-	1	LS	$0.00	
6	Millwork Changes - Pocket Doors - Hold	$	-	1	EA	$0.00	
7	Plexi Chem - Bulletin 15	$	-	1	LS	$0.00	
8	Acoustical Ceiling Tile Changes in the Kitchen - Bulletin 15	$	-	0	SF	$0.00	
9	Communications Bulletin 15	$	-	1	LS	$0.00	
10	Lyndon Steel - Bulletin 15	$	-	1	LS	$0.00	
11	Food Service - Bulletin 15 ***	$	-	1	LS	$0.00	
12	TL - Bulletin 15	$	-	1	LS	$0.00	
13	Watson Bulletin 15	$	7,500.00	1	LS	$7,500.00	
14	SMS - Bulletin 15	$	7,500.00	1	LS	$7,500.00	
15	Cook and Boardman - Bulletin 15	$	-	1	LS	$0.00	
16	Glass wall Systems - Bulletin 15 ***	$	-	1	LS	$0.00	
17	Glass System Hold ***	$	-	1	LS	$0.00	
					DIRECT WORK SUBTOTAL		$29,500

*** Cost for Rough-In Only - Mechanical, Electrical, Plumbing, Fire Protection
**** See Back Up for Clarification and Issues with Glass Number 0
*** Food Service - There was more than double the amount of equipment in the final drawings 0
*** Glass - Orgininal Sketch did not show door changes
*** Original sketch did not have the new glass walls on Level 3 0

Subtotal 0 Added Scope

CUMMING
Building Value Through Expertise

3820 Faber Place Drive
Suite 600
North Charleston, SC 29405
Phone 843.203.2900
Fax 843.760.6880
www.ccorpusa.com

LETTER OF TRANSMITTAL

TO: Department of Parks
823 Meeting Street
Charleston SC 29403
Capital Projects Division

DATE: July 13, 2020

PROJECT: International African American Museum

PROJECT #: CP-1425

ATTN: Edmund Most

SENT BY: Jonathan Roberts

PER:

WE ARE SENDING YOU:

- ☐ Attached
- ☐ Shop Drawings
- ☒ Executed Documents
- ☐ Prints
- ☐ Change Order
- ☐ Plans
- ☐ App. for Payment
- ☐ Contracts
- ☐ Samples
- ☐ Specifications
- ☐ Other: Change Order Request

VIA:

- ☐ Certified Mail
- ☐ U.S. Mail
- ☐ Federal Express
- ☐ UPS
- ☐ Courier
- ☒ Other: Hand Delivery

TRANSMITTED:

- ☐ For Review
- ☐ For Your Records
- ☐ For Approval
- ☐ For Information Only
- ☐ As Requested
- ☒ For Your Use
- ☐ For Distribution

THE FOLLOWING:

COPIES	DATED	DESCRIPTION
1 Original	7/13/20	IAAM – COR #52 Initiation of Lobby Kitchen Changes

REMARKS:

[illegible]

Receiver Signed: _____ Date: _____

CUMMING

Change Order Proposal Review Form

To: Edmund V. Most
From: Jonathan Roberts
Date: 7/31/2020
Contractor: Turner Construction Company

Project: CP 1425 International African American Museum
Project No.: CP 1425
Proposal No.: Change Order Request No. 55
Contract: Construction
(CMR)(ARCHITECT)(ENGINEER)(OTHER)

Description of work to be performed: **Bulletin #15 - Full Scope**

This request will cover the cost to complete the all lobby and kitchen modifications requested by IAAM.

Bulletin #15 included changes to the GMP design: plumbing revisions for the restroom reconfiguration and the changes to the kitchen/ dinning area, utilities for food service additions, and other general design adjustments to the design on the second/ third level.

This COR is associated with COR #52 ($32,056).

A - Customer Requested Change
B - Code/Regulatory Agency Required Change
C - Errors and Omissions
D - Replacing Unsuitable Soils
E - Soils Related Change Other
F - Unforeseen Conditions
G - Time Related Change
H - Liquidated Damages
I - Value Engineering Change
J - Exercising Pre-Priced Option (Allowance)
K - Accounting Error
(Indicate Reason for Change Proposal)

Justification: A - Customer Requested Change

Attachments:

	J&A from Project Manager		Cost Estimate (Expected to Exceed $10,000)
	Independent Cost Estimate		Change Proposal Request from CMR with Detailed Backup
	Pre-Negotiation Position (PNP)	X	

Proposal Cost (not to exceed): $403,493.00 **Owner Contingency Allow. Bal.**
Time Extension Requested: 0 **Time Extension Recommended:**

Special Circumstances: This change will increase the current GMP and be funded through an IAAM contribution to the City of Charleston.

Consequence of Rejection:

Comments by Supervisor:

Decision needed by: July 31, 2009

(NO) (YES)
(Circle One)
Jonathan Roberts
Jonathan Roberts, Cumming Corp.

Digitally signed by Jonathan Roberts
DN: C=US, E=jonathan.roberts@ccorpusa.com, O=Cumming Corporation, OU=Charleston Office, CN=Jonathan Roberts
Reason: I have reviewed this document
Contact Info: (843) 300-7517
Date: 2020.08.03 12:03:52-04'00'

Approved:

(NO) (YES)
(Circle One)
Rick Holt, Cumming Corp.

(NO) (YES)
(Circle One)
Robert Faust
Robert Faust, Cumming Corp.

(NO) (YES)
(Circle One)
Edmund V. Most, City of Charleston

(NO) (YES)
(Circle One)
Bernard Costantino
Bernard Costantino, Moody Nolan

Digitally signed by Bernard Costantino
DN: C=US, E=bernardcostantino@moodynolan.com, O=Moody Nolan, OU=Moody Nolan Columbus Ohio, CN=Bernard Costantino
Date: 2020.08.03 12:14:53-07'00'

Turner BROWN

COR #: 55

Date Submitted: July 24, 2020

TURNER BROWNSTONE
14 Wharf Street
Charleston, SC

To: Edmund Most
City of Charleston

Re: **Internation African American Muesum**

Bulletin 15 - Remaining Scope of work.

Please find attached our Proposed Change Order (PCO) for the above described Work. We are submitting for your review and approval of the changed condition(s) as outlined herein. All work shall be performed under our current contract terms and as outlined below:

Work Description:	Provide all required Labor, Materials, Equipment, and Administrative/Support costs to provide materials, labor, and equipment to drawing changes made in Bulletin 15. They will be per specs and drawings issued to Turner, scope of work as detailed within the Subcontractor's quote(s) &/or correspondence attached. The design has started and the will be submitted based on the new findings. Work in the field can not start with out signed change order.

Reason:
- [X] Owner Directive
- [ ] Code / Regulatory
- [ ] Unforeseen Condition
- [ ] Design Issue

Pricing:
- [ ] ROM Estimate of GR's & Insurances
- [X] ROM Estimate for Entire PCO
- [X] Lump Sum or **Firm Fixed Unit Pricing** for Trade Contractors - See Detailed Estimates

Time Impact:
- [ ] Evaluating Potential for Time Impact
- [X] Evaluated - NO TIME IMPACT
- 0 Calendar Days Requested
- [ ] Work has been Completed
- [ ] Work Has Commenced &/or is Ongoing
- [ ] Work Authorization is Requested By:

Submitted By: Contractor: **TURNER BROWNSTONE**

Walter Lewis Project Engineer — Dated 07/24/2020

$ 403,493 Amount Requested

Requested Action:
- [ ] Authorized to Proceed While Pricing
- [ ] Price Only
- [ ] Do Not Proceed or Price

Reviewed By: Program Manager: **CUMMING**

Dated / /

Authorized Action:
- [ ] Authorized to Proceed While Pricing
- [ ] Price Only
- [ ] Do Not Proceed or Price

Approved By: Owner: **City of Charleston**

Edmund Most — Dated / /

$ 403,493 Amount Approved

Turner

Internation African American Muesum
General Summary of the Estimate

COR No.: 55

Item #	Description of Work		DETAIL ESTIMATE OF DIRECTS
A1	GENERAL REQUIREMENTS (GR's) & GENERAL CONDITIONS (GC'S)	SELF PERFORMED LABOR	$0
A2	GENERAL REQUIREMENTS (GR's) & GENERAL CONDITIONS (GC'S)	MATERIAL(S) & EQUIPMENT	$0
	TRADE DIRECTS		$371,320.00
A3	Contingency 3%		
A4		SUBTOTAL TRADE DIRECTS	$371,320
A5			
A6			
A7			

				SUBTOTAL	$371,320
A8	CCIP	@	2.45%	=	$9,097.34
A9	Subguard	@	0.012	=	$4,455.84
A14	Builders Risk (Included Time)	@	0.84%	=	$3,119.09
	Performance and Payment Bond		0.00732	=	$2,718.06
A11					
A14	Procore	@	0.04500%	=	$167.09
A15	Overhead and Profit	@	3.25%	=	$12,615.18
A16			ESTIMATE TOTAL		$403,493
A16					
A17					

Turner

Internation African American Muesum
DETAIL ESTIMATE OF DIRECTS

COR No.: 55

DIVISIONS OF WORK	RATE	Unit	UNITS	SUBTOTAL	TOTAL	COMMENTS

GENERAL REQUIREMENTS (GR's) & GENERAL CONDITIONS (GC's)

DESCRIPTION

Due to additional scope of work and coordination in the Building	8,667.00	0	days	$0.00	
GENERAL REQUIREMENTS (GR's) & GENERAL CONDITIONS (GC's)					$0

TRADE DIRECTS

DESCRIPTION

Additional Scope of Work

Level 2 Kitchen, Restroom, and Lobby Changes

1	TCCO Bim Coordination - Alex Nash	$	90.00	120	HRS	$10,800.00	
2	1st Choice Entrance Door Change - Allowance	$	40,000.00	1	LS	$40,000.00	
3	Delete Glass Wall at Gift Shop	$	(3,500.00)	1	LS	-$3,500.00	
4	Cook and Boardman Bulletin 15 Costs	$	9,769.00	1	LS	$9,769.00	
5	Bulletin 15 Carolina Fire	$	15,746.00	1	LS	$15,746.00	
6	Donley - Bulletin 15	$	14,748.00	1	LS	$14,748.00	
7	CR - Hipp Bulletion 15 and 15.1	$	93,521.00	1	LS	$93,521.00	
8	P-Walls - Bulletin 15	$	7,400.00	1	LS	$7,400.00	
9	Millwork Changes - Pocket Doors	$	1,500.00	4	EA	$6,000.00	
10	Plexi Chem - Bulletin 15	$	3,846.00	1	LS	$3,846.00	
11	Acoustical Ceiling Tile Changes in the Kitchen - Bulletin 15	$	10.00	400	SF	$4,000.00	
12	Lyndon Steel - Bulletin 15	$	8,087.00	1	LS	$8,087.00	
13	Food Service - Bulletin 15 ***	$	85,875.00	1	LS	$85,875.00	
14	TL - Bulletin 15	$	17,809.00	1	LS	$17,809.00	
15	Watson Bulletin 15	$	82,798.00	1	LS	$82,798.00	
16	SMS - Bulletin 15	$	29,334.00	1	LS	$29,334.00	
17	MEP Roughin in COR 52	$	(32,056.00)	1	LS	-$32,056.00	
						$394,177.00	$394,177

Communication and Security

17	Communications Bulletin 15 - No Cost Add for Bulletin 15	$	-	1	LS	$0.00	
						$0.00	$0

3rd Floor Changes

18	Cook and Boardman - Bulletin 15	$	(22,857.00)	1	LS	-$22,857.00	
						-$22,857.00	-$22,857

DIRECT WORK SUBTOTAL $371,320

Add Back for not installing Glass Walls System on Level 3

Wall - Allowance	$	5,000.00
Delete Credit for Door Hardware and Doors on Level 3	$	22,857.00
Subtotal	$	27,857.00
Mark Ups 8.52	$	2,373.42
Total Add	$	30,230.42

COOK & BOARDMAN

9347 D. Ducks Lane, Suite A
Charlotte, NC 28273

Phone: 704-334-8683
Fax: 704-334-9366

TO: Turner Construction
ATTN: Walt Lewis

Date: July 24, 2020
Project: International African American Museum
RE: Bulletin 15

Division 8 Changes per Attached detailed report

Hollow Metal –	Materials $500.00
Wood Doors –	Materials $3,540.00
Hardware –	Materials $4,155.00
Installation –	Labor $1,800.00

Division 10

Toilet Accessories – Added 2 Toilet Tissue Dispensers	Materials $177
Toilet Partitions – changed from Stainless Steel to HPDE. Deleted Urinal Screen and added 2 Compartments	Materials ($403.00)

TOTAL ADD: $9,769.00

***** QUOTED PRICES INCLUDE ALL APPLICABLE TAXES*****

The above prices are subject to the following **conditions/exclusions**:
We exclude all glass any glazing unless otherwise noted.
All hardware for aluminum doors by door supplier unless otherwise noted.

The above prices are subject to the following terms:
Our terms are Net 30 subject to credit approval.
Freight is FOB Destination, unloading and storage is excluded.
QUOTED PRICES INCLUDE ALL APPLICABLE TAXES.
Quoted prices are valid for 30 days.

Thank you for the opportunity to participate in your project. Please contact us for any additional clarification you may require. At Cook and Boardman we are proud to have earned a reputation of being a service/solution provider in addition to providing materials.

Respectfully,
Melinda Gue
Email: mgue@cookandboardman.com

Project: 338378 - International African American Museum
Contemplated Change Order # 1
Bulletin #15 Changes

1 Single Door #201A **Corridor C201 to BOH Cafe 201B**

1 HMD MS214 16 A60 37.25" x 96.625" F SEM 2 1/4 RH (C3; LM2; MP2; U16)
1 SRW 16 CRS 618 SGL 37.25" x 96.625" T3 RH (A03_MSZ2+; F114; FANOTE:; H1; H234; NSTD_DR_THICK; PV2; S)

1 Intermediate Pivot	7227 INT	US26D	IV
1 Pivot Set	7227	US26D	IV
1 Lockset	L9080BDC M52A EE < 2 1/2	626	SC
1 Cylinder Core	80-043 50-210-GMK 50-210-MK 50-215 50-2	626	SC
1 Closer	3034 REG SRI WMS	AL	LC
1 Wall Bumper	WS406/407CVX	US32D	IV
1 Smoke Seal	5021 B 48"		NA
2 Smoke Seal	5021 B 108"		NA

1 Single Door #201B **Cafe 101 to BOH Cafe 201B**

1 HMD MS214 16 A60 37.25" x 96.625" F SEM 2 1/4 RH (C3; LM2; MP2)
1 SRW 16 CRS 618 SGL 37.25" x 96.625" T3 RH (A03_MSZ2+; F114; FANOTE:; H1; H234; NSTD_DR_THICK; PV2; S)

1 Intermediate Pivot	7227 INT	US26D	IV
1 Pivot Set	7227	US26D	IV
1 Lockset	L9080BDC M52A EE < 2 1/2	626	SC
1 Cylinder Core	80-043 50-210-GMK 50-210-MK 50-215 50-2	626	SC
1 Closer	3034 REG SRI WMS	AL	LC
1 Wall Bumper	WS406/407CVX	US32D	IV
1 Smoke Seal	5021 B 48"		NA
2 Smoke Seal	5021 B 108"		NA

1 Pocket Door #202A **Corridor C201 to Quiet 202A**

1 36" x 93.25" PCKT 1 3/4 SCL5 MDO PRIMED 5 ME F SCL

1 Sliding Door Privacy Set	991 A	14	IV
1 Pocket Door Kit	9878 72		HA

1 Pocket Door #202B **Corridor C201 to Quiet 202B**

1 36" x 93.25" PCKT 1 3/4 SCL5 MDO PRIMED 5 ME F SCL

1 Sliding Door Privacy Set	991 A	14	IV
1 Pocket Door Kit	9878 72		HA

-1 Single Door #203 **Corridor C201 to Coat Closet 203**
1 Pocket Door #203 **Corridor C201 to Storage 203**

-1 HMD MS214 16 A60 37.25" x 96.625" F SEM 2 1/4 RH (C3; LM2; MP2; U16)

1 36" x 93.25" PCKT 1 3/4 SLC5 MDO PRIMED 5 ME F SCL
-1 SRW 16 CRS 658 SGL 37.25" x 96.625" T3 RH (512; A03_MSZ2-; F114; FANOTE:; H1; H234; NSTD_DR_THICK; PV2; S

-1	Intermediate Pivot	7227 INT	US26D	IV
-1	Pivot Set	7227	US26D	IV
-1	Lockset	L9080BDC M52A EE < 2 1/2	626	SC
-1	Cylinder Core	80-043 50-210-GMK 50-210-MK 50-215 50-2	626	SC
-1	Closer	3034 REG SRI WMS	AL	LC
-1	Wall Bumper	WS406/407CVX	US32D	IV
1	Sliding Door Privacy Set	991 A	14	IV
-1	Smoke Seal	5021 B 48"		NA
-2	Smoke Seal	5021 B 108"		NA
1	Pocket Door Kit	9878 72		HA

-1 Single Door #209 **Corridor C201 to Storage 209**

-1 HMD MS214 16 A60 37.25" x 96.625" F SEM 2 1/4 LH (C3; LM2; MP2; U16)
-1 SRW 16 CRS 618 SGL 37.25" x 96.625" T3 LH (A03_MSZ2+; F114; FANOTE:; H1; H234; NSTD_DR_THICK; PV2; S)

-1	Intermediate Pivot	7227 INT	US26D	IV
-1	Pivot Set	7227	US26D	IV
-1	Lockset	L9080BDC M52A EE < 2 1/2	626	SC
-1	Cylinder Core	80-043 50-210-GMK 50-210-MK 50-215 50-2	626	SC
-1	Closer	3034 REG SRI WMS	AL	LC
-1	Wall Bumper	WS406/407CVX	US32D	IV
-1	Smoke Seal	5021 B 48"		NA
-2	Smoke Seal	5021 B 108"		NA

-1 Single Door #210 **Lobby C200 to Museum Shop 210**
1 Pocket Door #210 **Lobby C200 to C200 Lobby Desk**

1 36" x 102.5" PCKT 1 3/4 SCL5 MDO PRIMED 5 ME F SCL

1	Sliding Door Privacy Set	991 A	14	IV
1	Pocket Door Kit	9878 72		HA

-1 Single Door #T205 **Vestibule V209 to Unisex T207**
1 Single Door #T205 **Vestibule V209 to Unisex T207**

-1 SRW 16 CRS 614 SGL 37.25" x 96.625" T3 RH (A03_MSZ2+; F114; FANOTE:; H1; H234; NSTD_DR_THICK; PV2; S)
1 SRW 16 CRS 612 SGL 37.25" x 96.625" T3 RH (A03_MSZ2+; F114; FANOTE:; H1; H234; NSTD_DR_THICK; PV2; S)

-1 Pocket Door #T302 **Corridor C301 to Women's Room T302**
1 Pocket Door #T302 **Corridor C301 to Women's Room T302**

-1 SC CCP 16 CRS 718 SGLC 36" x 93.25" T3 (A03_MSZ2-)

-1 Pocket Door #T308 **Corridor C302 to Men's Room T308**
1 Pocket Door #T308 **Corridor C302 to Men's Room T308**

-1 SC CCP 16 CRS 718 SGLC 36" x 93.25" T3 (A03_MSZ2-)

1 Single Door #317 **Open Office 310 to IT Equipment 317**

1 37.25" x 91.125" WD 2 1/4 SCL5 MDO PRIMED 5 ME F SCL LH (INTPIV; PIV(2))
1 SRW 16 CRS 718 SGL 37.25" x 91.125" T3 LH (A03_MSZ2+; F114; FANOTE:; H1; H234; NSTD_DR_THICK; PV2; S)

1 Intermediate Pivot	7227 INT	US26D	IV
1 Pivot Set	7227	US26D	IV
1 Lockset	L9080BDC M52A EE < 2 1/2	626	SC
1 Cylinder Core	80-043 50-210-GMK 50-210-MK 50-215 50-2	626	SC
1 Closer	3034 REG SRI WMS	AL	LC
1 Wall Bumper	WS406/407CVX	US32D	IV
1 Smoke Seal	5021 B 96"		NA
1 Smoke Seal	5021 B 48"		NA

1 Single Door #319 **Open Office 310 to Security Office 319**

1 37.25" x 91.125" WD 2 1/4 SCL5 MDO PRIMED 5 ME F SCL RH
1 SRW 16 CRS 718 SGL 37.25" x 91.125" T3 RH (45H; A03_MSZ2+; EH1; F114; FANOTE:; H1; H234; NSTD_DR_THICK;

3 Hinges	3CB1HW 4 1/2 x 4 1/2	652	IV
1 Hinges	3CB1HW 4 1/2 x 4 1/2 CON TW8	652	IV
1 Electrified Lockset	L9092BDC EU M52A EE < 2 1/2 RX	626	SC
1 Cylinder Core	80-043 50-210-GMK 50-210-MK 50-215 50-2	626	SC
1 Closer	3034 REG WMS	AL	LC
1 Wall Bumper	WS406/407CVX	US32D	IV
1 Power Supply	PS902		LO
1 Weatherstrip	485AA 1 x 38" 2 x 96"		ZE
2 Smoke Seal	5021 B 96"		NA
1 Smoke Seal	5021 B 48"		NA
1 Auto Door Bottom	351AA 38"		ZE

1 Single Door #320 **Open Office 310 to Facilities Office 320**

1 37.25" x 91.125" WD 2 1/4 SCL5 MDO PRIMED 5 ME F SCL LH
1 SRW 16 CRS 718 SGL 37.25" x 91.125" T3 LH (50H; A03_MSZ2+; F114; FANOTE:; H1; H234; NSTD_DR_THICK; OMI

3 Hinges	3CB1HW 5 x 4 1/2	652	IV
1 Lockset	L9050BDC M52A EE < 2 1/2	626	SC
1 Cylinder Core	80-043 50-210-GMK 50-210-MK 50-215 50-2	626	SC
1 Closer	4040 XP RW/PA	AL	LC
1 Wall Bumper	WS406/407CVX	US32D	IV
1 Weatherstrip	485AA 1 x 38" 2 x 96"		ZE
2 Smoke Seal	5021 B 96"		NA
1 Smoke Seal	5021 B 48"		NA
1 Auto Door Bottom	351AA 38"		ZE

1 Pocket Door #318 **Corridor C301 to Break Room 318**

1 36" x 93.25" PCKT 1 3/4 SCL5 MDO PRIMED 5 ME F SCL

1 Sliding Door Passage Set	990 A	14	IV
1 Pocket Door Kit	9878 72		HA

-1	**Room #TA-T208**	**Men's T208.**	
1	**Room #TA-T208**	**Men's T208.**	
2	Toilet Tissue Disp Multi Roll B-3888		BO

Lewis, Walter - (CAR)

From: Bobby Rice <bobbyrice@glass1st.net>
Sent: Friday, May 29, 2020 5:52 PM
To: Stasiak, Brianne M - (CAR)
Cc: Lewis, Walter - (CAR)
Subject: RE: IAAM - Bulletin 15 and 16 Changes - ACTION NEEDED

Just an update, we still haven't been able to get a price for the specialty ENTICE system. I don't know what the design team is thinking cost wise but I had by vendor price a similar door with the same hardware and the cost is $28,000 for these two doors. Efco has a $4,000 credit for their doors which is without hardware since we aren't supplying it. These are without mark up and just assuming a wash for the labor for the ease of things. Our ROM cost for a VE product would be $28,000. This does not include insulated glass in the doors as they are requesting panic devices which mount through the glass which they can't do with an insulated unit so the doors would be 9/16" clear laminate. Figured I would pass this on before putting anything formal together as it may push them to keep the storefront doors. Let me know

Bobby Rice
Project Executive
O 704.291.7711 | C 980.328.1877
www.glass1st.net

Turner to hold 40K allowance and will return any unused dollars to the owner after scope has been finalized

From: Stasiak, Brianne M - (CAR) <bstasiak@tcco.com>
Sent: Tuesday, May 26, 2020 11:30 AM
To: Bobby Rice <bobbyrice@glass1st.net>
Cc: Lewis, Walter - (CAR) <wlewis@tcco.com>
Subject: RE: IAAM - Bulletin 15 and 16 Changes - ACTION NEEDED

Thank you for the update!

From: Bobby Rice <bobbyrice@glass1st.net>
Sent: Tuesday, May 26, 2020 11:27 AM
To: Stasiak, Brianne M - (CAR) <bstasiak@tcco.com>
Cc: Lewis, Walter - (CAR) <wlewis@tcco.com>
Subject: RE: IAAM - Bulletin 15 and 16 Changes - ACTION NEEDED

FYI,

I am still trying to get pricing from CRL for the ENTICE doors at the entrance. These are specialty doors and I can NOT provide ROM cost for these. I am pushing for something still but it will take a little time.

Bobby Rice
Project Executive
O 704.291.7711 | C 980.328.1877
www.glass1st.net

From: Stasiak, Brianne M - (CAR) <bstasiak@tcco.com>
Sent: Friday, May 22, 2020 9:05 AM
To: Bobby Rice <bobbyrice@glass1st.net>; Jeff Graper <JeffGraper@davidallen.com>; Stefanie Hutten <stefaniehutten@davidallen.com>; Ian Edmonds <ian@sportsfloor.org>; Michelle White <mwhite@plexi-chemie.com>; Melinda Gue <MGue@CookandBoardman.com>; Kristi Jones <Kristi@irvineaccessfloors.com>; Conor Jaunsen <Conor.Jaunsen@millerclapperton.com>; Steven A. Miller <SMiller@nationsroof.com>; Tommy Roberts <troberts@uni-sky.com>; Justin <justin@wsi-nc.com>
Cc: Lewis, Walter - (CAR) <wlewis@tcco.com>
Subject: RE: IAAM - Bulletin 15 and 16 Changes - ACTION NEEDED

Following up as a reminder that we are looking for these ROM's ☺

Thanks!

Brianne Stasiak | Engineer
Turner Construction Company | mobile 980.556.6846 | bstasiak@tcco.com
170 Meeting Street | Suite 312 | Charleston, SC 29401
ALLY | website | linkedin | facebook | twitter | youtube | pinterest

From: Stasiak, Brianne M - (CAR)
Sent: Tuesday, May 19, 2020 3:37 PM
To: 'Bobby Rice' <bobbyrice@glass1st.net>; Jeff Graper <JeffGraper@davidallen.com>; Stefanie Hutten <stefaniehutten@davidallen.com>; Ian Edmonds <ian@sportsfloor.org>; Michelle White <mwhite@plexi-chemie.com>; Melinda Gue <MGue@CookandBoardman.com>; Kristi Jones <Kristi@irvineaccessfloors.com>; Conor Jaunsen <Conor.Jaunsen@millerclapperton.com>; Steven A. Miller <SMiller@nationsroof.com>; Tommy Roberts <troberts@uni-sky.com>; Justin <justin@wsi-nc.com>
Cc: Lewis, Walter - (CAR) <wlewis@tcco.com>
Subject: IAAM - Bulletin 15 and 16 Changes - ACTION NEEDED

Hi Everyone,

Bulletin 15 and 16 have been uploaded to Procore (Documents > 00316 – Pricing Documents).

Please review these documents and provide a ROM (rough order of magnitude) by 5/25 and final pricing by 6/1. If you have any issues, please let me know. Some of you will not have any change associated with these.

Thank you!

Carolina Fire Control
INCORPORATED

Change Order Request #7

Date:	2-Jun-20	Job Number:	*19-2346*
Project Name:	IAAM	Location:	Charleston, SC

General Contractor: Turner Construction ATT: Daron Pardine
Address/City/State/Zip
City / State / Zip

COR# 7

Description of work credit - Per bulliten 15 we will have to add 15 heads and relocate 15 heads due to changes on the second and third floors

Labor	Hours	Rates		Total Costs
Construction Superintendent		*$68.70*		$0.00
Foreman/Fitter/Laborer	90	*$52.75*		$4,747.50
Fabrication/Listing	15	*$47.50*		$712.50
Engineering/BIM	60	*$76.30*		$4,578.00
Project Manager		*$91.57*		$0.00
Engineer review and stamp	0	$8,500.00		$0.00
				$0.00
Labor Totals				$10,038.00

Equipment & Miscellaneous	Units	Rates	Total Costs
Tool & Truck Charge	3	*$185.00*	$555.00
Lift	1	$400.00	$400.00
Subsistance	6	$125.00	$750.00
			$0.00
			$0.00
Equipment Totals			$1,705.00

Material	Qty.	Unit Price	Total Costs
Concealed pendent heads	15	$28.82	$432.30
1" schedule 40 pipe	300	$3.33	$999.00
1" tee	15	$2.90	$43.50
1" hangers	15	$4.68	$70.20
1" weld-o-let	15	$10.17	$152.55
1" ell	30	$3.71	$111.30
		$1.27	$0.00
	0	$0.00	$0.00
	0	$0.00	$0.00
	0	$0.00	$0.00
Material Cost:			$1,808.85
Sales Tax *(7.75%)*			$140.19
Material Totals:			$1,949.04

Change Order Sub Total:	$13,692.04
Change Order Overhead & Profit 15%	$2,053.81
Total of Change Order:	$15,745.84
Total Rounded	$15,746.00

Michael Holbrooks 5/22/2020
Signature Date

P.O. Box 1090 ~ Concord, NC 28026 ~ Phone 704-784-4218 ~ Fax 704-784-4405

Cook & Boardman

9347 D. Ducks Lane, Suite A
Charlotte, NC 28273

Phone: 704-334-8683
Fax: 704-334-9366

TO: Turner Construction
ATTN: Walt Lewis

Date: June 2, 2020 **REV 6-11-20**
Project: International African American Museum
RE: Bulletin 007.1 Changes

Description of Changes:

Deleted HW at Opening V200-4	Materials ($10,500.00)

Deleted Openings (303-1, 303-2, 304-1, 304-2, 305, 306, 307, 308, G201)

Hollow Metal Changes	Materials ($5,910.00)
Wood Door Changes:	Materials ($5,940.00)
Hardware Changes:	Materials ($9,432.00)
Labor Changes:	Labor (1,575.00)

Bulletin 15 Costs

TOTAL DEDUCT: ($33,357.00)

***** QUOTED PRICES INCLUDE ALL APPLICABLE TAXES*****

The above prices are subject to the following **conditions/exclusions**:
We exclude all glass any glazing unless otherwise noted.
All hardware for aluminum doors by door supplier unless otherwise noted.

The above prices are subject to the following terms:
Our terms are Net 30 subject to credit approval.
Freight is FOB Destination, unloading and storage is excluded.
QUOTED PRICES INCLUDE ALL APPLICABLE TAXES.
Quoted prices are valid for 30 days.

Thank you for the opportunity to participate in your project. Please contact us for any additional clarification you may require. At Cook and Boardman we are proud to have earned a reputation of being a service/solution provider in addition to providing materials.

Respectfully,
Melinda Gue
Email: mgue@cookandboardman.com

C. R. HIPP CONSTRUCTION COMPANY
COST DETAIL

To:	Turner Construction Company	Job No.:	04-19-005
Attn:	Walter Lewis	Contract No.:	47001126016
Project:	International African American Museum	Date:	6/17/2020
Subj:	Bulletin 15 & 15.1	COR No.:	6 Rev 1

MATERIAL AND EQUIPMENT COST

A. Material			$10,547.00
B. Equipment			$7,105.00
C. Miscellaneous material	10.00%	of A	$1,054.70
D. Escalation	0.00%	of A & C	$0.00
E. Subtotal			$18,706.70
F. Sales Tax	9.00%		$1,683.60
G. TOTAL			$20,390.30

LABOR COST

A. Labor - Plumbers	383.00	Hours	at Rate	$32.64	per hour.	$12,501.12
B. Labor - Sheetmetal	0.00	Hours	at Rate	$32.64	per hour.	$0.00
C. Labor -Pipefitter	0.00	Hours	at Rate	$32.64	per hour.	$0.00
D. Labor - Welder	0.00	Hours	at Rate	$32.64	per hour.	$0.00
B. Foreman	95.00	Hours	at Rate	$35.72	per hour.	$3,393.40
C. Superintendent	80.00	Hours	at Rate	$50.75	per hour.	$4,060.00
D. Project Manager	30.00	Hours	at Rate	$48.78	per hour.	$1,463.40
E. CAD / BIM	284.00	Hours	at Rate	$48.00	per hour.	$13,632.00
F. Subtotal						$35,049.92
G. Insurance and Taxes	42.00%					$14,720.97
H. Site Overhead	0.00%	of field	labor cost.			$0.00
I. Efficiency	0.00%	of field	labor cost.			$0.00
J. TOTAL						$49,770.89

OTHER COST

A. Rental Equipment					$0.00
B. Small Tool Expense	3.00%	of field labor.			$1,493.13
C: Blueprint Reproduction					$0.00
D: Engineering					$0.00
E: Operations on More Than One Floor	0.00%	of field labor.			$0.00
F: Excavation and Backfill	0	cu.yds.at	$0.00	per cu.yd.	$0.00
G: Clean up	5.00%	of field labor.			$2,488.54
H: Distribution of Materials	5.00%	of field labor.			$2,488.54
I TOTAL					$6,470.22

C. R. HIPP CONSTRUCTION COMPANY
COST DETAIL CONTINUATION

Subj.: Bulletin 15 & 15.1 COR No.: 6 Rev 1

SUBCONTRACTORS		
A. Insulation		$1,120.00
B. Core Drilling		$2,500.00
C.		$0.00
D.		$0.00
E.		$0.00
F		$0.00
G. Subtotal Subcontractor cost		$3,620.00
H Overhead and Profit	15.00%	$543.00
I. TOTAL		$4,163.00
RECAP		
A. Subtotal All Cost		$80,794.40
B. Warranty	1.00%	$807.94
C. Overhead	10.00%	$7,663.14
D. TOTAL JOB COST		$89,265.49
E. Profit	5.00%	$4,255.12
F. Subtotal Sell Price		$93,520.61
G. Bond	0.00%	$0.00
H. Mechanical Price		$93,520.61
TOTAL PRICE		$93,521.00

This change will require a 0 day time extention to complete contract.

This change proposal covers only direct costs associated with the change order work described above. We reserve the right to assess the impact of this change at a later date and to submit these cost as they become known. It is anticipated that all work required by this change will be done on a straight time basis. Overtime work, if required, will be invoiced as an additional item.

Please advise as soon as possible if we are to proceed.

To: Bobby Teachey & Walt Lewis
6/1/2020
COR #: 45
Title: Bulletin #015 Revisions
Schedule Impact: 1 day

Donley's CONCRETE GROUP

Agent: Donley's Concrete Group

The design team issued ASI #015 which had a variety of design changes to the museum. The following changes were observed that impacted DCG's scope of work:
- Addition of a block out on level 2 near column C-7. DCG to provide formed blockout and reinfrocing per 3/S-003. Steel framing, deck cut out and hole protection by others
- Modifications to floor plan affecting location, sizes and quantities of sleeves. DCG to review coordinated drawings once generated, update rebar shop drawings, and procure/install sleeves
- Additional area of stone floor on level 2 which requires lightweight topping slab

Materials	Qty.	Unit	Labor $/UM	EQ $/UM	Mat $/UM	SUB $/UM		Labor	EQ	Mat	SUB
Additional Concrete (light weight)	6.0	CY	$ -	$ -	$ 165	$ -		$ -	$ -	$ 990	$ -
Additional Concrete Admixtures	6.0	CY	$ -	$ -	$ 10	$ -		$ -	$ -	$ 60	$ -
Additional Rebar (Lump sum w/ detailing)	1.0	LS	$ -	$ -	$ -	$ 7,345		$ -	$ -	$ -	$ 7,345
Misc Materials (sleeves, nails, saw blades, etc.)	1.0	LS	$ -	$ -	$ 150	$ -		$ -	$ -	$ 150	$ -
Additional Lumber	1.0	LS	$ -	$ -	$ 150	$ -		$ -	$ -	$ 150	$ -
Equipment											
Concrete Pump	1.0	HRS	$ -	$ 350	$ -	$ -		$ -	$ 350	$ -	$ -
Labor											
Laborers	4	HRS	$ 46	$ -	$ -	$ -		$ 184	$ -	$ -	$ -
Carpenter	8	HRS	$ 57	$ -	$ -	$ -		$ 456	$ -	$ -	$ -
Field Engineer - review plans again & load new sleeve points in gun	24	HRS	$ 80	$ -	$ -	$ -		$ 1,920	$ -	$ -	$ -
Rodbuster (unload & Install additional rebar)	4	HRS	$ -	$ -	$ -	$ 57		$ -	$ -	$ -	$ 228
Foreman	8	HRS	$ 60	$ -	$ -	$ -		$ 480	$ -	$ -	$ -
Superintendent	-	HRS	$ 100	$ -	$ -	$ -		$ -	$ -	$ -	$ -
Project Manager	-	HRS	$ 90	$ -	$ -	$ -		$ -	$ -	$ -	$ -
							Subtotal	$ 3,040	$ 350	$ 360	$ 7,573
							Burden	INCL	$ -	$ -	$ -
							Tax	$ -	$ 32	$ 32	$ 682
							SDI	$ -	$ -	$ -	$ 947
							Service Dep.	$ 91	$ 18	$ -	$ -
							Bond	$ 30	$ 4	$ 4	$ 76
							GL Insurance	$ -	$ -	$ -	$ -
							OH/Profit	INCL	$ 60	$ 59	$ 1,392
							Item Totals	$ 3,162	$ 463	$ 455	$ 10,668
							Totals	$			14,748

Submitted by: Chris Hewitt, Project Manager
Donley's Concrete Group

PROPOSED CHANGE ORDER

LYNDON STEEL COMPANY LLC
1947 Union Cross Road
Winston-Salem, NC 27107
www.lyndonsteel.com
(336) 785-0848 FAX 788-8835

PROPOSED CHANGE ORDER #:	15
REVISION #:	N/A
LSC CONTRACT #:	19041
DATE:	06/01/20

TO: Turner Const
4601 Park Road, Suite 601
Charlotte, NC 28209

Attention: Walt Lewis
Phone: 919-788-2024 FAX: -

PROJECT: International African American Museum
Charleston, SC

Description: Bulletins #15, #16 & #17.1

NOC#: 22

DESCRIPTION	A/D	AMOUNT
Added cost due to Bulletins #15, #16 and #17.1 received 5/20/20. Added cost for (1) C6x8.2 frame for slab penetration at Level 2 per revised Drawing S-103, and revised beam penetrations per revised Drawings S-210 and S-212. See attached Proposed Detailing Extras Forms for additional description of revision detailing. Also, attached find Change Order from CAS Steel for breakdown of added erection cost.		
Materials	ADD	$297
Shop Labor	ADD	$560
Detailing	ADD	$595
Freight	ADD	$1,100
Erection - CAS Steel	ADD	$4,386
Overhead & Profit	ADD	$1,041
Bonding	ADD	$81
	TAX	$27

This change will ADD an additional 2 WORK DAYS to our scheduled scope of work.

Total This Change Order: $8,087

Accepted - The above prices and specifications of this change order are satisfactory and are hereby accepted. All work is to be performed under the same terms and conditions as specified in the original contract unless otherwise stipulated.

Turner Const Signature: Date:

LSC Signature: Date: 06/01/20

LSC PM: DeWitt Friedermann
e-mail: DFriedermann@lyndonsteel.com

Prepared By: Spencer Fleming

Please sign and return to E-mail noted above or via Facsimile (336-788-8835) to Lyndon Steel Company.
Upon receipt of written approval of this change order, LSC will proceed to fabricate and deliver the above items.
If the above proposal is not accepted within thirty calendar days from the date of issuance, LSC reserves the right to revise the above quotation.

PROPOSED DETAILING EXTRAS

Sheet # 1 of 1

Job No. 9041 **Job Name** International African American Museum

Detailer Reference CO # U **NOC#** 22 (Contact PM or DC for number)

Source of Change: 9041 IAAM - Material Needed - NOC 22.pdf

Slab penetration added to accommodate grease interceptor at café kitchen on S-103 level 02 framing plan part B.
Details 6 & 7 on S-210 -10" diameter pipe sleeve shifted in elevation to accommodate modifications made to sanitary line.
Detail 7/S-212 -10" diameter pipe sleeve shifted in elevation to accommodate modifications made to sanitary line.
Detail 10/S-212 -6" diameter beam penetration added to accommodate modifications made to sanitary line.

General Description of Change:

Slab penetration added to accommodate grease interceptor at café kitchen on S-103 level 02 framing plan part B.
Details 6 & 7 on S-210 -10" diameter pipe sleeve shifted in elevation to accommodate modifications made to sanitary line.
Detail 7/S-212 -10" diameter pipe sleeve shifted in elevation to accommodate modifications made to sanitary line.
Detail 10/S-212 -6" diameter beam penetration added to accommodate modifications made to sanitary line.

List of ADDED PIECE MARKS and/or Number of Added Members at the Time of Revision

	Detail Hrs.
Added one C6x8.2 channel frame for slab penetration.	2

List of REVISED PIECE MARKS & Status | **Shop Drawing Status**

Added one new frame drawing, revised (4) penetration beam drawings and updated (3) E-plans.	4
Total Detailing Hours this sheet	6
Total Checking Hours this sheet	1
Total Hours this sheet	7
Grand Total Det and Ckg Hours ALL sheets	7

Total Impact to Schedule, ALL sheets: _____

Detailing Coord. Review: _____ (Initial / Date)

Project Manager Acceptance: _____ (Signature) (Dated)

NOTE: The detailer is not to proceed with changes until this form is signed and returned.
For urgent and /or unusual circumstances requiring immediate detailing changes, contact the Project Manager or Detailing Coordinator.

NOTE: The Detailer has the option of using their standard company form if all the above information is included.

Fax to: Detailer **CC:** PM, PC, NOC Estimator **Original:** BB

INVOICE

Description:	**NOC 22**			
Job:	**434 IAAM**			
Date:	**TBD**			
Invoice Date:	**21-May-20**			
Cranes	**Quantity**	**Rate/Hr**	**Hours**	**Subtotal**
200Ton		$500.00		$0.00
110 Ton		$250.00		$0.00
100 Ton		$225.00		
Equipment*		**Rate/Day**	**Days**	
300amp Diesel		$60.00		$0.00
Gen Pack	1	$135.00	2	$270.00
LN25 Wire Weld		$25.00		$0.00
Compressor		$25.00		$0.00
Forklift TH83		$119.00		$0.00
Forklift TH5208		$119.00		$0.00
Office Trailer		$18.00		$0.00
Man lift	2	$100.00	2	$400.00
Scissor lift		$24.00		$0.00
Truck		$78.00		$0.00
Manpower		**Rate/Hr**	**Hours**	
Supervisor		$70.00		$0.00
Journeyman	2	$65.00	17	$2,210.00
Helper		$50.00		$0.00
Overtime		$25.00		$0.00
Perdiem	2	$12.00	17	$408.00
Subtotal				$3,288.00
Expendables		10%		$197.28
Fuel		6%		$328.80
Subtotal				$3,814.08
OH/Profit		15%		$572.11
Total				$4,386.19

*NOTE: The above listed rates for equipment are subject to review on a case by case basis due to minimum rental durations and costs in some instances.

PRECISION WALLS, INC.®
Partners in driving your job.

7317 Peppermill Parkway, N. Charleston, SC 29418
Raleigh – Greensboro – Charlotte – Wilmington – Greenville, NC
Columbia, SC – Greer, SC – Nashville, TN - Charleston, SC
www.precisionwalls.com

To: Turner Construction
Attn: Bri'Shae Anderson

6/01/2020

Construction Proposal

Project: International African American Museum

Sheet Numbers: ASI 15 and 16

Location: 14 Wharfside Street, Charelston, SC 29401
Architect: Moody and Nolan, Inc.

Dear Ms. Anderson,

We are pleased to provide you with a proposal for ASI 15 and 16.

We propose to furnish and install the all work added to our base scope in ASI 15 and 16 :

Base Bid Per Above Scope: $7,400.00

Respectfully Submitted,

Precision Walls, Inc.

By Jeff Christensen

CONDITIONS:
(1) This Proposal is based on AIA Subcontract Form, current Edition.
(2) Acceptance by your authorized agent "on the reverse side", within 30 days from Proposal date.
(3) If we are awarded this Subcontract, this Proposal shall become a binding part of that Subcontract.
(4) See reverse side for Precision Walls, Inc. Standard Rider.

Light Gauge Metal Framing – Commercial Drywall – Moveable Partitions (Superwall®) – Acoustical Ceilings – EIFS/ Stucco – Plaster – Light Gauge Metal Trusses – Customized Aluminum Door Frames – Interior Glass Sections – Operable & Accordion Partitions – Projection Screens – Vinyl Wall Coverings.

Clarifications:

1. Proposal is based on the development of a mutually agreed upon schedule with sequencing that allows:
   a. Any welded hollow metal door frames are to be on site prior to interior wall framing
   b. All walls to deck to be topped out with drywall and fire taped prior to MEP above ceiling rough-ins
   c. Control lines and benchmarks to be provided prior to wall layout
2. Trash to be removed via trash chutes at each floor; chutes furnished & maintained by others.
3. Proposal is limited to scope stated above; any changes to scope or additional work from that listed above will be approached as a change order.
4. Proposal is based on 1 mobilizations.
5. All debris to be disposed to onsite dumpsters provided by G.C.
6. Finishing of tile backer board is not included.
7. Trash and rubbish - cleanup. The Contractor shall pay for the removal of trash from the jobsite or provide a dumpster at the jobsite. Precision Walls, Inc. will clean-up the work area(s) of its trash and rubbish and deposit in a central area on jobsite floor, or in a dumpster adjacent to the building designated by the Contractor or Owner.
8. Material stocking is included, and 1 location per floor per area shall be left accessible for stocking.
9. Proposal includes thermal batt insulation. Mineral wool-board and blanket insulation is excluded.
10. Priced as open shop; prevailing wages NIC.

Exclusions:

1. Any items not specifically listed in the scope of work.
2. Proposal excludes patch or repair of existing walls (listed as alternate)
3. Level 5 finish
4. Overtime, night work or weekend work
5. Sealing of through wall penetrations by others
6. Disposal of trash from jobsite
7. Access Panels

PWI STANDARD RIDER TO SUBCONTRACT

I. Temporary facilities and services (to be supplied by GC or Owner at no charge to PRECISION WALLS, INC.).

A. Electrical services: The power source shall be within 100 ft. of the PWI work area(s) and sufficient to provide full power for tools and equipment, with GFI service included.

B. Sufficient heat and ventilation for proper drying of joint compound according to specifications.

C. Adequate lighting (not drop or pull lights) to allow for proper drywall hanging and wall finishing.

D. Water (within 100 ft. of work area(s)) and toilet facilities.

E. Sealing of wall penetrations, i.e., MEP, etc., is the responsibility of the trade making the penetration as it relates to the fire rating of same.

F. Any wall required to be fire rated/smoke rated shall be allowed to be built free of any encumbrances that may result from early rough-in by MEP trades.

II. Payments, Progress or Final - The Contractor shall pay the Subcontractor each progress payment and the final payment under this Subcontract within five working days after he receives payment from the Owner, except as provided below. The amount of each progress payment to the Subcontractor shall be the amount to which the Subcontractor is entitled, reflecting the percentage of completion allowed to the Contractor for the Work of this Subcontractor applied to the Contract Sum of this Subcontract, and the percentage actually retained, if any, from payments to the Contractor on account of such Subcontractor's Work, plus, to the extent permitted by the Contract Documents, the amount allowed for materials and equipment suitably stored by the Subcontractor, less the aggregate of previous payments to the Subcontractor.

The Contractor shall permit the Subcontractor to request directly from the Architect or Owner information regarding the percentages of completion or the amount certified on account of Work done by the Subcontractor.

If the Architect or Owner does not issue a Certificate for Payment or the Contractor does not receive payment for any cause which is not the fault of the Subcontractor, the Contractor shall pay the Subcontractor, on demand, a progress payment computed as above or the final payment as follows.

Final payment, constituting the entire unpaid balance of the Contract Sum, shall be due when the Work described in this Subcontract is fully completed and performed in accordance with the Contract Documents and is satisfactory to the Architect or Owner, and shall be payable as above.

If this Contract is direct with the Owner, then the Owner shall pay Precision Walls, Inc., any progress or final billing on or before the tenth of the following month.

III. Additional Work / Change Orders – Additional work can be initiated through the method as spelled out in the executed contract. In the rare case that we are directed and authorized to proceed using a Field Directive or an Extra Work Order the following rates for labor will apply:

	Regular Time	Overtime Time	Premium Time(difference)
Carpenter/Mechanic	$45/hr.	$68/hr.	$26/hr.
Laborer/Helper	$35/hr.	$50/hr.	$20/hr.
Foreman	$55/hr.	$88/hr.	$33/hr.
Superintendent	$75/hr.	$118/hr.	$43/hr.
Project Manager	$95/hr.	$148/hr.	$53/hr.

In the event that the work has to occur after hours, nights, weekends, etc. these rates will increase by 50% to accommodate for overtime reimbursement.

ACCEPTANCE
Accepted

Approved

Turner Construction, Inc.

PRECISION WALLS, INC.

Signature and Title

Proposal Number 10

Proposal Request Form

Name of Subcontractor: Superior Mechanical Systems	
Contract Number:	
Name of Project: African American Museum	
Date: 5/29/2020	
Description of Change: *Attach Additional Sheets as Necessary* Bulletin 15	

SUB-CONTRACTOR			
1	Cost of Materials (including sales tax)	$	6,881.16
2	Labor	$	7,655.64
3	**SubTotal**	$	14,536.80
4	Overhead & Profit (15% of Line 5)	$	2,180.52
5	**SubTotal**	$	16,717.32
6	**Subcontractor**		$11,180.00
7	Overhead & Profit (10% of Line 6)	$	1,118.00
8	Bond Increase (1.1%)	$	319.17
9	**Second-tier Subcontractor SubTotal**	$12,617.17	
10	**PROPOSAL TOTAL** (Sum of Lines 7 and 10)	$	29,334.49

Additional Contract Time Required (Impact to Project Critical Path) **Days:** _____

Submitted By:

_____ Date: _____

Contractor's Representative

Proposal Request Form

Itemized Product Breakdown

	Products	Unit Cost	Quantity	Total
1	Ductwork and Accessories			$ 1,894.00
2	Piping and Accessories			$ 2,122.00
3	Misc Items (hangers, sealant, etc)			$ 2,400.00
4				
5				$ -
6				$ -
7				$ -
8				$ -
9				$ -
10				$ -
11				$ -
12				$ -
13				$ -
14				$ -
15				$ -
16				$ -
17				$ -
18				$ -
19				$ -
20				$ -
			SUBTOTAL	$ 6,416.00
			Sales Tax	$ 465.16
			SUBTOTAL	$ 6,881.16

Proposal Request Form

Itemized Equipment Breakdown

	Products	Unit Cost	Quantity	Total
1				$ -
2				$ -
3				$ -
4				$ -
5				$ -
6				$ -
7				$ -
8				$ -
9				$ -
10				$ -
11				$ -
12				$ -
13				$ -
14				$ -
15				$ -
16				$ -
17				$ -
18				$ -
19				$ -
20				$ -
			SUBTOTAL	$ -

Proposal Request Form

Itemized Labor Breakdown

	Labor Classification	Labor Rate	Hours	Total
1	Senior Mechanic	$ 36.00	24	$ 1,440.00
2	Mechanic Helper	$ 26.00	48	$ 2,080.00
3	Senior Pipe Fitter	$ 39.00	20	$ 780.00
4	Pipe Fitter Helper	$ 29.00	40	$ 1,160.00
5	Warehouse/Truck Driver	$ 16.00	24	$ 384.00
6				
7				$ -
8				$ -
9				$ -
10				$ -
11				$ -
12				$ -
13				$ -
14				$ -
15				$ -
16			Labor Burden (31%)	$ 1,811.64
17				$ -
18				$ -
19				$ -
20				$ -
			SUBTOTAL	$ 7,655.64

Proposal Request Form

Itemized Subcontractors Listing

	Subcontractors	Activity	Total
1	Sigmund Consulting	Coordination Drawings	$ 2,400.00
2	A1 Insulation	Insulation	$ 3,400.00
3	Johnson Controls	Controls and Control Wiring	$ 5,380.00
4			
5			
6			
7			
8			
9			
10			
11			
12			
13			
14			
15			
16			
17			
18			
19			
20			
		SUBTOTAL	$ 11,180.00

THOMPSON & LITTLE INC.
"Together We're Cooking!"
Est. 1945
PH: 910.484.1128 Fax: 910.484.0576
www.ThompsonLittle.com

06/01/2020

Quote

To: Turner-Brownstone Construction Group
Bobby Teachey
4055 Faber Place Drive
Suite 202
North Charleston, SC 29405
843-973-8660 (Contact)

From: Thompson & Little
Patsy Young

Project: International African American Museum
14 Wharfside Street
Charleston, SC 29401

Item	Qty	Description	Sell	Sell Total
1	2 ea	**OVERSHELF** Titan Stainless 3WMSPR-12 36" x 12" Wall Mounted Shelf with Pot Rack and (1) s/s pot hook per linear foot, 3/16" x 2" s/s flat bar and 16/300 s/s top, nsf	$288.59	$577.18
2	1 ea	**THREE (3) COMPARTMENT SINK** Titan Stainless 3C1824-2D24-14 3 Compartment Sink 18" x 24" x 14" with raised rolled edge, (2) 24" drainboards, s/s H-frame legs, and adjustable s/s bullet feet, 14/300 s/s, nsf	$2,878.21	$2,878.21
	1 ea	ES Endsplash		
	3 ea	LDB Lever drain bracket		
	9 ft	SD Sound Deadening, priced per linear ft		

Item	Qty	Description	Sell	Sell Total
2.1	1 ea	**PRE-RINSE FAUCET ASSEMBLY, WITH ADD ON FAUCET**	$764.45	$764.45
		T&S Brass B-0133-ADF12-B		
		EasyInstall Pre-Rinse Unit, with mixing faucet, includes 6" wall bracket, wall mount base, 8" centers, B-0044-H stainless steel flexible hose with polyurethane inner hose, overhead spring body & (B-0107) spray valve, 18" riser, add-on faucet with (062X) 12" swing nozzle, Eterna cartridges with spring checks, lever handles, 1/2" NPT female inlets, EPAct2005 compliant		
	1 ea	B-TEE-EZK EasyInstall Tee Assembly, chrome-plated		
	1 ea	B-0199-01 Aerator, non-splash, 55/64" -27 female aerator threads, fits goosenecks & nozzles		
	1 kt	B-0230-K Installation Kit, (2) 1/2" NPT nipples, lock nuts & washers, (2) short "Ell" 1/2" NPT female x male		
	3 ea	B-3960-01 Waste Valve, lever handle, 3" sink opening, 2" drain outlet with 1-1/2" adapter & overflow assembly (replaces B-3924-01)		
3	1 ea	**DISHWASHER, UNDERCOUNTER**	$3,607.50	$3,607.50
		CMA Dishmachines L-1X W/HEATER		
		Dishwasher, undercounter, 24"W x 23-1/2"D x 31"H, with sustainer heater, low temperature chemical sanitizing, (30) racks/hour, 12-1/8"H dish clearance, built-in chemical pumps & deliming system, built-in primer switches & instant start, upper & lower stainless steel wash arms with reinforced end caps, pumped drain, pump purging system, built-in strainer for water inlet, door safety switch, electrical components housed in stainless steel drawer, stainless steel construction, 4" adjustable legs, includes (1) open & (1) peg rack, 1 HP wash pump, NSF, UL, cUL		
	1 ea	115v/60/1-ph, 16.0 amps, standard		
	1 ea	Low Chemical Alarm Kit, 115v/60/1-ph		
		NOTE: Updated model number.		
4	1 ea	**HAND SINK**	$235.87	$235.87
		Titan Stainless QS-SHS-ESLR		
		Quick Ship Hand Sink, wall mount, 14" wide x 10" front-to-back x 5" deep bowl, 6" backsplash with gooseneck faucet, non-drop edge, single thick endsplashes on the left and right, includes: basket drain & mounting brackets, heavy gauge 304 stainless steel		
	1 ea	WH Wrist Handles for Faucet		
5	1 ea	**WORK TABLE**	$1,599.44	$1,599.44
		Titan Stainless 4SLCB-30-14		
		48" x 30" Worktable with backsplash, s/s legs, crossrails, and adjustable s/s bullet feet. 14/300 s/s, nsf		
	4 ft	IVE Inverted V-Edge (priced per ft.)		
	1 ea	C-1824 Fabricated Sink Bowl, 18" x 24" x 14" deep, 16 ga s/s		
	1 ea	LDB Lever drain bracket		
	4 ft	SD Sound Deadening, priced per linear ft		

Item	Qty	Description	Sell	Sell Total
5.1	1 ea	**WALL / SPLASH MOUNT FAUCET** T&S Brass B-0231-CR-KIT Pantry Faucet, double, wall mount, 8" centers, 12" swing nozzle, lever handles, stream regulator tip, ceramic cartridge, low lead, (2) 24" flex hose, 1/2" NPT, NSF, ADA Compliant	$252.83	$252.83
	1 ea	B-0199-01 Aerator, non-splash, 55/64" -27 female aerator threads, fits goosenecks & nozzles		
	1 ea	B-3960-01 Waste Valve, lever handle, 3" sink opening, 2" drain outlet with 1-1/2" adapter & overflow assembly (replaces B-3924-01)		
6	1 ea	**WALL GRID PANEL** Metro WG1848K3 SmartWall Wire Grid, 48" x 18", Metroseal 3™ epoxy-coated corrosion-resistant finish with Microban® antimicrobial protection; brackets not included, NSF	$452.53	$452.53
	1 ea	SW56K3 SmartWall Wall Track, 56", 12 gauge steel, Metroseal 3™ epoxy-coated corrosion-resistant finish with Microban® antimicrobial protection; includes: hardware to join the track to another, NSF		
	2 ea	SWU45K3 SmartWall Upright, 45", Metroseal 3™ epoxy-coated corrosion-resistant finish with Microban® antimicrobial protection, slots for grids/shelf supports at 1-1/2" increments; 26 slots total; sold by the piece		
	1 ea	GS1448K3 SmartWall Grid Shelf, 48"W x 14"D, with retaining edge, Metroseal 3™ epoxy-coated corrosion-resistant finish with Microban® antimicrobial protection , NSF		
	1 ea	GS1848K3 SmartWall Grid Shelf, 48"W x 18"D, with retaining edge, Metroseal 3™ epoxy-coated corrosion-resistant finish with Microban® antimicrobial protection , NSF		
	1 ea	WGBRKT SmartWall Bracket Kit, mount grid directly to wall (6 brackets)		
	6 ea	PGHK6K3 SmartWall Prong Hook, 6", Metroseal 3™ epoxy-coated corrosion-resistant finish with Microban® antimicrobial protection		
	1 ea	H209K3 SmartWall Storage Basket, 13-3/8"W x 5"D x 7"H, Metroseal 3™ epoxy-coated corrosion-resistant finish with Microban® antimicrobial protection, NSF		
	1 ea	H210K3 SmartWall Storage Basket, 17-3/8"W x 7-1/2"D x 5"H, Metroseal 3™ epoxy-coated corrosion-resistant finish with Microban® antimicrobial protection, NSF		

Item	Qty	Description	Sell	Sell Total
7	1 ea	**ICE MAKER, CUBE-STYLE** Hoshizaki KM-520MAJ Ice Maker, Cube-Style, 22"W, air-cooled, self-contained condenser, production capacity up to 556 lb/24 hours at 70°/50° (480 lb AHRI certified at 90°/70°), stainless steel finish, crescent cube style, R-404A refrigerant, 115v/60/1-ph, 10.6 amps, NSF, UL, ENERGY STAR®	$4,222.75	$4,222.75
	1 ea	Warranty: 3-Year parts & labor on entire machine		
	1 ea	Warranty: 5-Year parts & labor on evaporator		
	1 ea	Warranty: 5-Year parts on compressor & air-cooled condenser		
	1 ea	B-300SF Ice Bin, 22"W, top-hinged front-opening door, 300-lb ice storage capacity, for top-mounted ice maker, stainless steel exterior, 6" painted flange legs included, protected with H-GUARD Plus Antimicrobial Agent, ETL, ETL-Sanitation		
	1 ea	Warranty: 3-Year parts & labor for bin		
	1 pk	LP-6 FLANGE LEG Flange Leg Package, (4) x 6", stainless steel		
	1 ea	H9320-51 Water Filtration System, single configuration, 18.4" H (manifold & cartridge)		
	1 ea	Warranty: 1-Year on entire water filtration system & replaceable elements, standard		
8	1 ea	**INDUCTION RANGE, COUNTERTOP** Vollrath 924HIDC Cayenne Heavy-Duty Induction Range, countertop, 24"W x 30"D x 13-5/8"H, (4) hob, digital controls, (100) power settings, 100°-450°F temperature range, 1-180 minute timer function, 2500-2900 watts per hob (5000-5800 watts total), (2) 208-240v/50/60/1ph, (2) 24 amps, (2) cords with NEMA 6-30P, NSF, UL, CUL, FCC, Made in USA	$4,338.44	$4,338.44
8.1	1 ea	**EQUIPMENT STAND, FOR COUNTERTOP COOKING** Vollrath 4087924 Equipment Stand, 24"W x 30"D x 24"H, marine edge stainless steel top & under shelf, 5" casters, 500 lb. capacity, NSF, Made in USA, KD	$640.94	$640.94
9	1 ea	**COMBI OVEN, ELECTRIC** RATIONAL B119106.12.202 (CMP 101E 208V) CombiMaster® Plus, Combi Oven/Steamer, electric, (10) 12" x 20" full size hotel or (10) 13" x 18" half size sheet pan capacity, mode selector control, 100 cooking programs, automatic cleaning, LED display, core temperature probe, 5-speed programmable fan, hand shower with automatic retracting system, interface USB, hinging rack 2-5/8", 208v/60/3-ph, 52.8 amps, 19.0 kW (dual voltage: retrofitable to 240v/60/3-ph, 60.9 amps, 19.0 kW) (KNLZ listed by UL & City-wide COA by FDNY for New York City in single and stacked combination with an UltraVent or UltraVent Plus)	$12,789.96	$12,789.96
	1 ea	NOTE: All discounts subject to approval by manufacturer		
	1 ea	2 years parts and labor, 5 years steam generator warranty		
	1 ea	CAP Chef Assistance Program, a RATIONAL certified Chef conducts 4 hours/location specialized application training with personnel, no charge		

Item	Qty	Description	Sell	Sell Total
	1 ea	9999.9951 RCI Rational Certified Installation, new certified installation cost for a countertop model is $1000 for the first unit (61/62/101/102) (Pricing based on a 50 mile radius, Additional charges may apply, See attached installation flyer for details) THIS ITEM IS NON-DISCOUNTABLE, USA ONLY (NET)		
	1 ea	9999.9812 Pre-Installation Site Survey, ensures that the site has proper space and connections for gas, electric, drain & water, includes 50 miles (100 miles round trip) from the installer, can only be purchased with a Certified Installation, THIS ITEM IS NON-DISCOUNTABLE, USA ONLY (NET)		
	1 ea	8720.1551US Installation Kit, electric SCC WE/CMP 102 (440/60/3ph & 480/60/3ph); electric SCC WE/CMP 201 (440/60/3pm & 480/60/3ph); electric SCC WE/CMP 61 (208/60/1ph & 240/60/1ph); electric SCC WE/CMP 101 (208/60/3ph & 240/6/3ph) THIS ITEM IS NON-DISCOUNTABLE, USA ONLY (NET)		
	1 ea	1900.1154US Water Filtration Single Cartridge System, for any single Combi model or Combi-Duo models XS/XS, 61/61 or 61/101, includes: (1) single head with pressure gauge, R95H filter & filter installation kit		
	1 ea	9999.8448 RCI Rational Certified Installation, additional installation cost for a Rational Water Filter System is available when purchased with Certified Installation of Rational unit (Pricing based on a 50 mile radius, additional charges may apply. See attached flyer for details) THIS ITEM IS NON-DISCOUNTABLE, USA ONLY (NET)		
	1 ea	NOTE: The RATIONAL Water Filtration Systems helps provide consistent high quality water to your RATIONAL SelfCooking Center or your CombiMaster Plus. The patented carbon block technology reduces the effects of sediment, chloramines and chlorine while providing the required flow rates		
	1 ea	56.00.210A Cleaner tablet without Phosphorus, for ALL SelfCookingCenter® units since 2004 & CombiMaster® Plus units with article #BXXXXXX or Serial MI series since 4/2017, goes up to 70% further than liquid cleaner, "FREIGHT CLASS 85 LIMITED QUANTITY" (minimum order quantity: 2pcs, unless ordered with a unit)		
	1 ea	56.00.211 Rinse Aid Tablets, bucket with 50 packets, for CombiMaster® Plus article number BXXXXXX or Serial MI series since 4/2017 and SelfCookingCenter® units serial # SE series (4/2004 - 9/2008) - goes up to 100% further than liquid rinse aid (this product is NOT to be used with units that have CareControl) (minimum order quantity: 2pcs, unless ordered with a unit)		
	1 ea	60.30.320 UG I Stationary Oven Stand, all sides open, height 26-3/8", stainless steel construction, for SCC 61/CMP 101 series		
10		**SPARE NO.**		Spare

Item	Qty	Description	Sell	Sell Total
11	1 ea	**EXHAUST HOOD W/FIRE SYSTEM** Captive-Aire 5424ND-2-PSP-F 5424ND-2-PSP-F - 6ft 0" Long Exhaust-Only Wall Canopy Hood with 14" Wide Front Perforated Supply Plenum with Built-in 3" Back Standoff x1 - 430 SS Where Exposed x1 - Fire Cabinet Wall Mounted 12.00" Width x 48.00" Length x 24.00" Height x1 - FILTER - 16" tall x 16" (15.625" by 15.625") wide Stainless Steel Captrate Solo filter with hook, ETL Listed. Particulate capture efficiency: 85% efficient at 9 microns, 76% efficient at 5 microns. Used on hoods shipped AFTER 7/27/17. x4 - Recessed Allanson Round LED fixture and LED Light, 3500 K warm output. x2 - EXHAUST RISER - Factory installed 10" Diameter X 4" Height x1 - SUPPLY RISER - 10"x 20" Supply Riser with Volume Dampers x2 - 1/2 Pint Grease Cup New Style, Flanged Slotted x1 - FIELD WRAPPER 18.00" High Front, Left, Right x1 - Face Mount 1st Switch x1 - BACKSPLASH 122.00" High X 108.00" Long 430 SS Vertical (Includes End Caps & Divider Bars) x1 - Face Mount Extra Switch(es) x1 - RIGHT QUARTER END PANEL 23" Top Width, 0" Bottom Width, 23" High 430 SS x1 - Electrical Package Installation in Utility Cabinet by Plant. x1 - LEFT QUARTER END PANEL 23" Top Width, 0" Bottom Width, 23" High 430 SS x1 - Parts required to mount riser sensor 6 inches beside riser. Sensor installed directly in line with the center of riser and in center of the plenum space front to back. Sensor included. x1	$6,424.79	$6,424.79
	1 ea	ANSUL ANSUL-3.0-WC Ansul 3 gallon Fire System in Wall Mounted Utility Cabinet (includes pre-piped hood(s) with detection, tank(s), release mechanism, microswitches and pull station). Includes piping for hood: 1. x1 - MGVA1 GAS VALVE - 1" Mechanical Shutoff Valve (Ansul) (25-55601) - Includes Upstream Strainer assembly x1		
	1 ea	SC-311110FP - ELEC SYSTEM SC-311110FP 3 Phase w/ control for 1 Exhaust Fan, 1 Supply Fan, Exhaust on in Fire, Lights out in Fire, Fan(s) On/Off Thermostatically Controlled. Room temperature sensor shipped loose for field installation. INVERTER DUTY 3 PHASE MOTOR REQUIRED FOR USE WITH VFD. Includes 1 Duct Thermostat kit. x1 - Digital Prewire Lighting Relay Kit. Includes hood lighting relay & terminal blocks. Allows for up to 1400W of lighting each. x1 - Thermistor CABLE - 18/2 AWG GREEN WHITE, plenum rated. USED for thermistor duct stat. Per Foot Price. x40 - CAT-5E CABLE - 25 Foot. x1		
11.1	1 ea	**INSTALL FIRE SUPPRESSION SYSTEM** Captive-Aire HOOK UP FIRE SYS Fire System Hookup	$2,526.32	$2,526.32

Item	Qty	Description	Sell	Sell Total
11.2	1 ea	**DESIGN VERIFICATION** Captive-Aire FACTORY SERVICES Service Design Verification for Hood x1 Service Design Verification for Standard Electrical Control Package x1 Service Design Verification Mileage Charge: (46) x 2 = 92 total miles x1 Service Design Verification Minimum x1	$480.42	$480.42
12	1 ea	**REACH-IN REFRIGERATOR** Arctic Air AWR25 Refrigerator, reach-in, one-section, 31"W, 25.0 cu. ft. capacity, electronic thermostat with digital LED display, +33°F to +41°F temperature range, (1) solid hinged door with lock (field reversible), remain open door feature, removable magnetic gasket, (3) adjustable wire shelves, white epoxy coated front & sides, white ABS interior liner with stainless steel floor, (4) 4" casters (2 locking), bottom mounted self-contained refrigeration, R290 Hydrocarbon refrigerant, 1/4 HP, 115v/60/1-ph, 3.0 amps, cord, NEMA 5-15P, cETLus, ETL-Sanitation, ENERGY STAR®	$1,220.00	$1,220.00
	1 ea	1 year parts & labor, 5 years on compressor warranty standard		
13	1 ea	**ACCESSORY** Titan Stainless C-1014-UM 10" x 14" x 10" Undermount Sinkbowl (Faucet by others)	$496.20	$496.20
13.1	1 ea	**PANTRY FAUCET** T&S Brass B-0325-WH4 Pantry Faucet, double, deck mount, 4" adjustable centers, 5-3/4" swivel gooseneck spout with Series 1 stream regulator outlet (includes lock washer to convert to rigid) 4" wrist handles with color coded indexes, quarter turn Eterna cartridges with spring checks, polished chrome plated brass body, 1/2" NPT female inlets, low lead, cCSAus, ADA Compliant (replaces B-0324-04)	$175.83	$175.83
	1 ea	B-0199-01 Aerator, non-splash, 55/64" -27 female aerator threads, fits goosenecks & nozzles		
	1 cs	B-0425-M Supply Nipple Kit, includes (1) 1/2" NPT x 2" long inlet supply nipple, (1) 1/2" locknut washer & (1) 1/2" locknut, brass (2 each per master pack)		
14	1 ea	**ACCESSORY** Titan Stainless C-1014-UM 10" x 14" x 10" Undermount Sinkbowl (Faucet by others)	$496.20	$496.20
14.1	1 ea	**DECK MOUNT FAUCET** T&S Brass B-0325-CC-CR Mixing Faucet, deck mount, 4" adjustable centers, 5-3/4" swivel gooseneck spout with Series 1 stream regulator outlet (includes lock washer to convert to rigid), lever handles with color coded indexes, quarter-turn Cerama cartridges with check valves, polished chrome plated brass body, 1/2" NPT male inlets, low lead, cCSAus, ADA Compliant	$147.49	$147.49
	1 ea	B-0199-01 Aerator, non-splash, 55/64" -27 female aerator threads, fits goosenecks & nozzles		

Item	Qty	Description	Sell	Sell Total
15		**NIKEC** COFFEE BREWER - BY PRODUCT SUPPLIER		
16	1 ea	**WINE CELLAR CABINET** Perlick Corporation HD24WS-B Shallow-Depth Series Wine Reserve Refrigerator, undercounter, 23-7/8"W x 18"D, self-contained refrigeration, 40°F to 68°F temperature range, (3.1) cu. ft. interior volume, (2) black vinyl-coated full extension shelves (adjustable) & black vinyl-coated floor rack, (1) hinged door, interior light, front vented, self-evaporating condensate pan, galvanized back & base, stainless steel top & sides & door, stainless interior, R134a, 1/6 HP, 115v/60/1-ph, 2.3 amps, 6' cord & NEMA 5-15P, NSF, cULus	$2,011.30	$2,011.30
	1 ea	WARNING: The materials used in this product may contain chemicals known to the State of California to cause cancer and birth defects or other reproductive harm. For more information go to www.P65Warnings.ca.gov		
	1 ea	NOTE: The "H" Series refrigerators require a site installed external transformer for countries with 230/50 power. One unit can be connected to Perlick transformer model C15007A. Two units can be connected to Perlick transformer model C15007B. Transformer can be installed in any convenient location in the building.		
	1 ea	5 yr. compressor warranty, 1 yr. parts & labor warranty		
	1 ea	Door finish: glass with black/field laminate frame		
	1 ea	Left hinged		
	1 ea	Full length, 24", stainless steel grip with chrome endcaps		
	1 ea	Door lock, chrome		

Item	Qty	Description	Sell	Sell Total
17	1 ea	**WINE CELLAR CABINET** Perlick Corporation HD24WS-B Shallow-Depth Series Wine Reserve Refrigerator, undercounter, 23-7/8"W x 18"D, self-contained refrigeration, 40°F to 68°F temperature range, (3.1) cu. ft. interior volume, (2) black vinyl-coated full extension shelves (adjustable) & black vinyl-coated floor rack, (1) hinged door, interior light, front vented, self-evaporating condensate pan, galvanized back & base, stainless steel top & sides & door, stainless interior, R134a, 1/6 HP, 115v/60/1-ph, 2.3 amps, 6' cord & NEMA 5-15P, NSF, cULus	$2,011.30	$2,011.30
	1 ea	WARNING: The materials used in this product may contain chemicals known to the State of California to cause cancer and birth defects or other reproductive harm. For more information go to www.P65Warnings.ca.gov		
	1 ea	NOTE: The "H" Series refrigerators require a site installed external transformer for countries with 230/50 power. One unit can be connected to Perlick transformer model C15007A. Two units can be connected to Perlick transformer model C15007B. Transformer can be installed in any convenient location in the building.		
	1 ea	5 yr. compressor warranty, 1 yr. parts & labor warranty		
	1 ea	Door finish: glass with black/field laminate frame		
	1 ea	Right hinged		
	1 ea	Full length, 24", stainless steel grip with chrome endcaps		
	1 ea	Door lock, chrome		
18		**SPARE NO.**		Spare

Item	Qty	Description	Sell	Sell Total
19	1 ea	**REFRIGERATED SELF-SERVICE UNDER COUNTER HEIGHT CASE** Structural Concepts CO33R-UC Oasis® Self-Service Refrigerated Under Counter Height Case, 36-1/4"W, 32-3/4"H, Breeze-E (Type II) with EnergyWise self-contained refrigeration system (rear access), Blue Fin coated coil, LED top light, one piece formed ABS plastic tub, black interior, laminated exterior, (2) square full end panels, casters with levelers, front panels extend over end panels to blend with adjacent counters (supplied by others), counter surface (supplied by others) extended over top of unit, cETLus, ETL-Sanitation	$7,350.75	$7,350.75
	1 ea	NOTE: If GFCI is required, a GFCI breaker MUST be used in lieu of a GFCI receptacle		
	1 ea	1 yr. parts & labor warranty, 5 yr. compressor warranty, standard		
	1 ea	Breeze-E (Type II) with EnergyWise refrigeration (rear access)- NSF Type II compliant, standard		
	1 ea	110-120v/60/1ph, 11.98 amps, 1050 watts, standard		
	1 ea	6 ft straight blade power cord with NEMA 5-15P, standard		
	1 ea	NOTE: Compressor air rear intake, front discharge at toe kick, unit MUST remain 4" from wall & front & rear panels cannot be blocked (Not applicable with remote refrigeration option)		
	1 ea	Exterior: Wilsonart or Formica NON-PREMIUM laminate (Color chart available from factory rep or access color selections via www.wilsonart.com or www.formica.com)		
	1 ea	NOTE: SCC will not be responsible for additional charges incurred for Premium or other Manufacturer's laminate selections not originally quoted		
	1 ea	Exterior back panel: Solid flip down rear door, locking		
	1 ea	Left end panel: Square full with mirrored interior, standard		
	1 ea	Right end panel: Square full with mirrored interior, standard		
	1 ea	Digital fahrenheit thermometer, standard		
	1 ea	Removable solid security cover, locking		
20		**SPARE NO.**		Spare
21	1 ea	**SNEEZE GUARD** BSI SG-UV Sneezeguard: 30" x 71"+71" x 30" -U shaped --- Includes CUSTOM CV-100-2 Clear View Series, UV Bonded glass Partition, 1/2" tempered glass front panels, DOES NOT INCLUDE TOP SHELVES, Unit shipped fully assembled. , (255) # shipping weight each. Does not include Heat Lamps or Lights	$6,577.65	$6,577.65

Item	Qty	Description	Sell	Sell Total
22	1 ea	**SANDWICH / SALAD PREPARATION REFRIGERATOR** Beverage Air SPE27HC Sandwich Top Refrigerated Counter, one-section, 27"W, 6.8 cu. ft., (1) door, stainless steel top with opening for (6) 1/6 & (2) 1/9 size pans, removable 10" cutting board, (2) epoxy-coated wire shelves, stainless steel exterior, aluminum interior, rear-mounted self-contained refrigeration, (pans furnished are 4" deep, tops will accommodate 6" deep pans), 6" casters (2 with brakes), R290 Hydrocarbon refrigerant, 1/10 HP, cULus, UL EPH Classified, UL-Sanitation, Made in USA	$2,171.01	$2,171.01
	1 ea	3 years parts & labor warranty (excludes maintenance items)		
	1 ea	Self-Contained refrigeration		
	1 ea	Additional 4 years compressor warranty (part only), standard		
	1 ea	115v/60/1-ph, 2.0 amps, cord with NEMA 5-15P		
	1 ea	Door(s) hinged on right, standard		
	1 ea	03B04S095D-01 Clear Lid, in lieu of roll top		
	1 ea	When a clear lid is installed on this unit an overshelf CANNOT be attached		
	1 ea	6" Heavy duty casters, standard		
23	1 ea	**MOBILE HEATED CABINET** Metro C543-ASFS-U C5™ 4 Series with Insulation Armour™ Plus, mobile heated holding cabinet, under counter, insulated solid door, top mount controls, thermostat to 200°F, universal wire slides on 3" centers, adjustable on 1-1/2" increments, (5) 18" x 26" or (10) 12" x 20" x 2-1/2" pan capacity, 2" casters, stainless steel, 120V/60/1, 1400 watts, 11.7 amps, NEMA 5-15P, cULus, NSF, ENERGY STAR®	$2,641.55	$2,641.55
	1 ea	1 year warranty against manufacturing defects		
24		**NIKEC** POINT OF SALE (POS) - BY OWNER		
25	2 ea	**INDUCTION RANGE WARMER, COUNTERTOP** Vollrath 5950275 Mirage® Induction Buffet Warmer, countertop, 16-1/16"W x 16-1/16"D x 3-1/16"H, black tempered ceramic glass top with black base, hold only or warming only, (4) power levels, LED indicator lights on control panel, connect up to (3) units together with 30" inter-connect cord & only run one power cord, 120v/50/60/1-ph, 300W, 2.5 amps, cord with NEMA 5-15P, cULus, NSF, FCC, imported	$432.15	$864.30
	2 ea	1 year parts & labor warranty		
99.1	1 ea	**HANG HOOD** Double C Mechanical CUSTOM		
99.2	1 ea	**LABOR** Thompson & Little, Inc. INSTALL Install Balance of Equipment		

Merchandise	$67,955.21
Freight	$3,489.16
Installation	$8,000.00
Tax 9%	$6,429.99
Total	$85,874.36

Acceptance: _____ Date: _____

Printed Name: _____

Project Grand Total: $85,874.36

Turner Logistics

PURCHASE AUTHORIZATION & APPROVAL

COR # 5

PROJECT INFORMATION

Submit Date: 1-Jun-20

Client Name : Turner Construction
Project Name : IAAM
Project Type : Equipment Purchase Order
TL Project Number : 190799

EXECUTIVE SUMMARY

Per Bulletin 15 - Added VAV 2-15 and some CFM and heating capacity changes. Also, made change in Electrical distribution and Panelboard.

Scope	Description	Vendor	Cost
Elec.	Bulletin 15 Electrical Distribution Changes	Eaton	$ 13,818.00
Mech.	Added VAV 2-15	JCI	$ 770.00
	Freight		included
	Installation		by others
		Sub-total	$ 14,588.00
		COS at 12%	$ 1,750.56
		Insurance	not included
		Tax at 9%	$ 1,470.47
		Total Approval	**$ 17,809.03**

APPROVAL

We are **excluding** the following:

Installation and connection
Handling, storage, adjustment, modification and associated materials
Spare materials or attic stock
Associated labor and materials are not included, pricing by others
Labor warranty for installation or any term length labor warranty

Assuming the aforementioned scope, quantities, unit costs, labor rates, overhead, profit and other identified costs for the referenced work associated with the IAAM project, meet with your approval and you agree that the work will commence, please provide evidence thereof with your signature below.

No work will commence without execution of this document.

Turner Logistics assumes no liability for any and all impact to the project due to lack of execution of this document.

A formal change order shall be issued for the referenced work within 7 working days from the date of execution of this document.

APPROVAL

Name : _____

Date : _____

Please return the signed approval letter to:

Arash Ghasemi, Logistics Engineer
Turner Logistics LLC
aghasemi@tcco.com

Detail Bill of Material

Project Name:	Int'l African American Museum _CUIE1031X8K1	**Negotiation No:**	CUIE1031X8K1
General Order No:	LCS0023060	**Alternate No:**	0029

Item No.	Qty	Product	Description
	1	Panelboards	30 Circuits, 100A, Fully Rated, 208Y/120V 3Ph 4W, Copper Bus, 35kAIC, 100A, 3P FDE Main Breaker[Top Fed], Flush Mounted

Catalog No P2A100BT30CD01
Designation AP-L2D

Qty	List of Materials
1	100A, 3P FDE Main Breaker
1	100A 210+ LSI Trip Unit, Included
6	1P GHQ Branch Provision Only
1	60A, 3P GHB Branch Breaker
15	20A, 1P GHQ Branch Breaker
3	30A, 2P GHB Branch Breaker
1	Copper Main Bus, 100 Amps
1	Density Rated Cu Main Bus (1000A per sq. inch)
1	Std. Bolted Cu Ground Bar (Cu Cable Only)
1	Panel Nameplate - White with Black Letters
1	Circuit Directory - Metal Frame with Plastic Cover
1	Type 1 Enclosure: EZB2042R
1	EZ Trim, Door in Door, Concealed Hardware: EZT2042F
1	Add Yale 511 Lock to Door-in-Door EZ Trim.

Item No.	Qty	Product	Description
	1	Dry Type Transformers	Transformer Type: General Purpose Vented

3 Phase, 30 KVA,
1 K-Factor
480 Primary Volts
208Y/120 Secondary Volts
Temperature Rise 115C with 220C Insulation System
Copper Winding Material
Sound Reduction : 0
NEMA ST-20 Audible Sound Level: 45
Efficiency : DOE 10 CFR Part 431 (2016)
UL Listed : Y
Enclosure Type: NEMA 2 (for N3R, select Weather Shield in Mods tab)
Operating Frequency: 60 HZ

Catalog No V48M28F3016CU
Designation T2-L2M-L2D

Qty	List of Materials
1	3 Phase, 30 KVA, 480 Primary Volts, 208Y/120 Secondary Volts, 115C with 220C Insulation System Temperature Rise, Copper Winding Material, 60 HZ
1	Transformer Lug Kit/1PH 15-37.5KVA or 3PH 15-45KVA

Item No.	Qty	Product	Description
	1	MCCB SERIES C	HFDE MCCB 65 kA @ 480V ELECTRONIC LSI 3P 60-160A

Catalog No HFDE316032

Qty	List of Materials
1	HFDE MCCB 65 kA @ 480V ELECTRONIC LSI 3P 60-160A

Detail Bill of Material

Project Name:	Int'l African American Museum _CUIE1031X8K1	**Negotiation No:**	CUIE1031X8K1
General Order No:	LCS0023060	**Alternate No:**	0029

Item No.	Qty	Product	Description
	1	Enclosed Circuit Breaker	Enclosed Breakers

Catalog No SHFD3100L
Designation 100A ECB

Qty	List of Materials
1	Factory Assembled Enclosed Thermal Magnetic Circuit Breaker
1	Molded Case Circuit Breaker with Standard Terminals
1	Circuit Breaker Enclosure - Nema 1 Surface Mounted

Item No.	Qty	Product	Description
	2	MCCB SERIES C	TYPE HFD, 3 POLE, 20A TRIP, 600V CLASS, 65KA AT 48

Catalog No HFD3020

Qty	List of Materials
2	TYPE HFD, 3 POLE, 20A TRIP, 600V CLASS, 65KA AT 48

Item No.	Qty	Product	Description
	1	MCCB SERIES C	TYPE GHB BREAKER 2P 20A 277/480VAC MAX 125/250VDC

Catalog No GHB2020

Qty	List of Materials
1	TYPE GHB BREAKER 2P 20A 277/480VAC MAX 125/250VDC

Eaton Selling Policy 25-000 applies.

All orders must be released for manufacture within 90 days of date of order entry. If approval drawings are required, drawings must be returned approved for release within 60 days of mailing. If drawings are not returned accordingly, and/or if shipment is delayed for any reason, the price of the order will increase by 1.0% per month or fraction thereof for the time the shipment is delayed.

Seller shall not be responsible for any failure to perform, or delay in performance of, its obligations resulting from the COVID-19 pandemic or any future epidemic, and Buyer shall not be entitled to any damages resulting thereof.

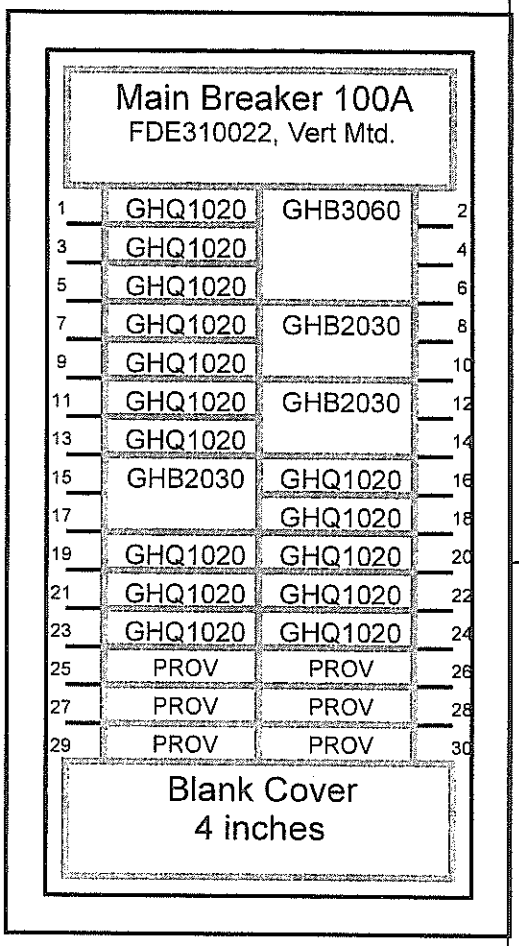

General Information **(Section 1 of 1)**

Service Voltage:	208Y/120V 3Ph 4W	**Enclosure:**	Type 1
Bus Rating & Type:	100A Copper	**Neutral Rating:**	100A
Ground Bar:	Std. Bolted Copper, Cu cable only		
S.C. Rating:	35k A.I.C. Fully Rated		

Main Device Type: Main Breaker - Top Cable Entry
Main Terminals: Mechanical - (1) #14-1/0 (Cu/Al)
Neutral Terminals: Mechanical - (1) #14-1/0 (Cu/Al)
Box Catalog No.: EZB2042R
Trim: EZ Trim, Door in Door, Concealed Hardware (EZT2042F)

Flush Mounted

Box Dimensions: Consult Factory to Verify Dimensions.
Min. Gutter Size: Top = 5.5" [139.7mm] Bottom = 5.5" [139.7mm]
Left = 5.75" [146.1mm] Right = 5.75" [146.1mm]

Panel ID Nameplate: **(1) AP-L2D**
Type: Plastic, adhesive-backed **(2) 208Y/120V 3Ph 4W**
Color: White with Black Letters **(3)**

UL *****Non-Interchangeable Main Device*****

Trim Lock: Standard Lock & Key (Keyed WEM2)
Circuit Directory: Metal Frame with Plastic Cover
Density Rated Bus
Main Circuit Breaker Trip Type: 100A 210+ LSI.
Seismic Label (IBC/CBC Seismic Qualified).
Heat Loss - Watts (Est.) = 50
Weight - lbs (Est.) = 91

Device Modifications:

Ref #	Description
Main Device Mods:	
CN_100A 210+ LSI	100A 210+ LSI Trip Unit, Included

Branch Devices

Qty	Poles	Trip	Frame	Amps	kAIC
15	1	20	GHQ	100	35
3	2	30	GHB	100	35
1	3	60	GHB	100	35
6	1		PROV		

Main Devices

Qty	Poles	Trip	Frame	Amps	kAIC
1	3	100	FDE	100	35

Notes:

Qty	Item
1	Add Yale 511 Lock to Door-in-Door EZ Trim.

The information on this document is created by Eaton Corporation. It is disclosed in confidence and it is only to be used for the purpose in which it is supplied.

PREPARED BY: JOY A FRAZIER	DATE: 5/27/2020	Eaton	
APPROVED BY	DATE	JOB NAME: Int'l African American Museum _CUIE1031X8K1	
		DESIGNATION: AP-L2D	
VERSION: 1.0.0.32		TYPE: PRL2a	DRAWING TYPE: Customer Approval
NEG-ALT Number: CUIE1031X8K1-0029	REVISION: 0 / DWG SIZE: A	G.O.: LCS0023060	ITEM / SHEET: 1 of 1

Dry-Type Transformers General Information

- Standard Transformer Catalog Number: V48M28F3016CU
- Transformer Type: General Purpose Vented
- Phase: 3
- kVA: 30
- Primary Volts: 480
- Secondary Volts: 208Y/120
- Temperature Rise: 115C with 220C Insulation System
- Winding Material: Copper
- Enclosure Type: NEMA 2 (for N3R, select Weather Shield in Mods tab)
- Frequency (Hz): 60
- Frame: 940
- Wiring Diagram: 280B
- Weight (lbs.): 430
- Impedance (%): 2.3
- UL Listed: Y
- Max Practical Inrush (Amps): 235
- X/R: 0.42
- No Load Losses (Watts): 116
- Total Losses (Watts): 751

Standard Values

- K-Factor: 1
- TAPS: 2@+2.5%, 4@-2.5%
- Sound Reduction (dB): 0
- NEMA ST20 Sound Level (dB): 45
- DOE 10 CFR Part 431 (2016) Efficient: Y
- Infrared Viewing Window: None

Field-Installed Accessories Included

- Lug Kit: LKS1

The information on this document is created by Eaton. It is disclosed in confidence and it is only to be used for the purpose in which it is supplied.

PREPARED BY: JOY A FRAZIER	DATE: 5/27/2020		Eaton		
APPROVED BY	DATE		JOB NAME: Int'l African American Museum _CUIE1031X8K1 DESIGNATION: T2-L2M-L2D		
VERSION: 1.0.0.4			TYPE: Dry-Type Transformer	DRAWING TYPE: Customer Appr.	
NEG-ALT Number: CUIE1031X8K1-0029	REVISION: 0	DWG SIZE: A	G O: LCS0023060	ITEM	SHEET: 1 of 1

NOTE:
1. ALL UNITS ARE DESIGNED IN ACCORDANCE WITH APPLICABLE NEMA, UL, ANSI, AND IEEE STANDARDS.
2. DRY-TYPE VENTILATED, CLASS AA, NEMA TYPE 2 ENCLOSURE.
3. FOR NEMA 3R OUTDOOR APPLICATION, USE WEATHERSHIELD # WS58.
4. TRANSFORMERS ARE FLOOR-MOUNTED. USE WALL-MOUNT BRACKET WMB05 FOR WALL-MOUNTING.
5. 220°C CLASS INSULATION SYSTEM.
6. PAINT COLOR IS ANSI #61.
7. ALUMINUM UNITS HAVE ALUMINUM WINDINGS AND TERMINATIONS. COPPER UNITS HAVE COPPER WINDINGS AND TERMINATIONS.
8. TRANSFORMER CAN BE INSTALLED AT A MIN. DISTANCE TO BACK AND SIDE WALLS OF 2 INCHES AND TO A 6 INCHES MIN. DISTANCE TO BACK WALLS WHEN WEATHERSHIELDS ARE NEEDED. WALLMOUNT BRACKETS CANNOT BE USED IN COMBINATION WITH WEATHERSHIELDS.
9. DIMENSIONS IN INCHES[mm].

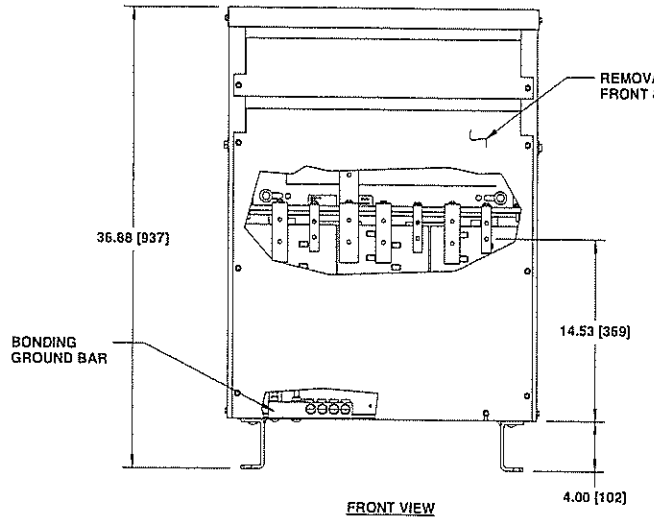

FRONT VIEW

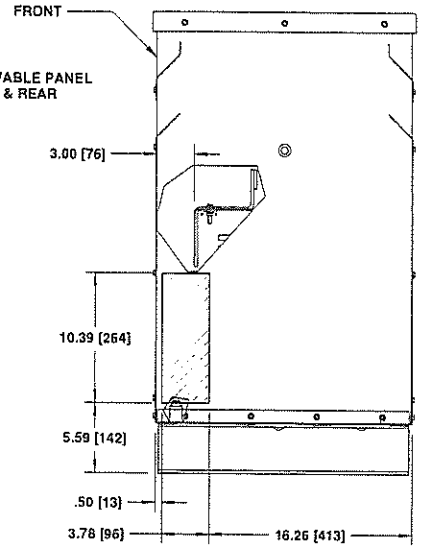

SIDE VIEW

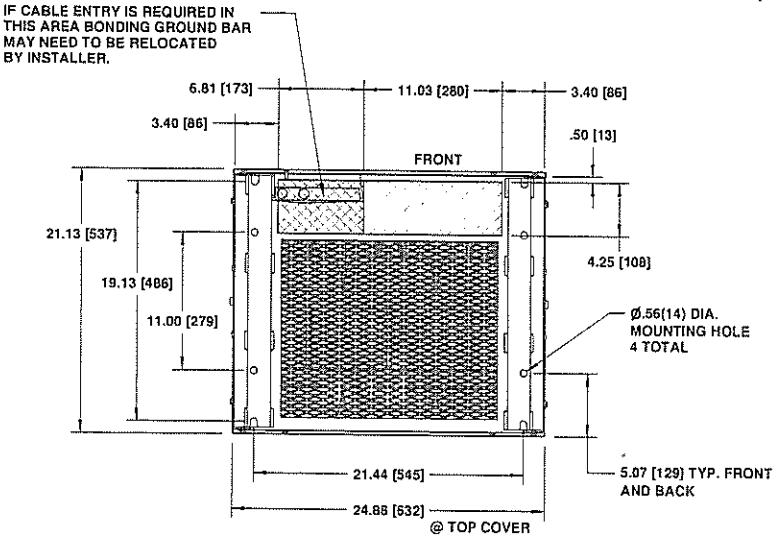

BOTTOM VIEW

USE 10.39[264] x 3.78[96] BOTH SIDES, AND (11.03[280]+6.81[173]) x 4.25[108] ON BOTTOM AS RECOMMENDED CABLE ENTRY LOCATIONS.

THIS DIMENSION DRAWING IS FOR REFERENCE ONLY. IT IS NOT TO BE REGARDED AS INDICATING THE EXACT DETAILS OF CONSTRUCTION.

PRODUCT CODE:		FEDERAL ID NO.		
6	ECO-164756	J.C.S.	C.B.	5/7/2019
5	ECO-133517	J.G	C.B.	1/16/2018
4	ECN107449	J.C.S	E.R	4/25/2017
REV	DESCRIPTION	DFTR	APPD	DATE
REVISIONS				

DFTR J.C.S.	DATE 10/30/2015	THE INFORMATION ON THIS DOCUMENT WAS CREATED BY EATON CORPORATION. IT WAS DISCLOSED IN CONFIDENCE AND IS ONLY TO BE USED FOR THE PURPOSE IN WHICH IT WAS SUPPLIED.	EATON
APPD D.G.	DATE 10/30/2015	TITLE DRY TYPE TRANSFORMER OUTLINE	
S.O.		TYPE DRY TYPE TRANSFORMER	OUTLINE
REVISION 6		G.O.	DWG FR940	SHEET 1 OF 1

GO/NEG-Alt-Date:		Job Name:
LCS0023060-0029-5/27/2020		Int'l African American Museum _CUIE1031X8K1
Item Number:	Catalog Number: V48M28F3016CU	Designation: T2-L2M-L2D

VOLTS	TAP
504	1
492	2
480	3
468	4
456	5
444	6
432	7

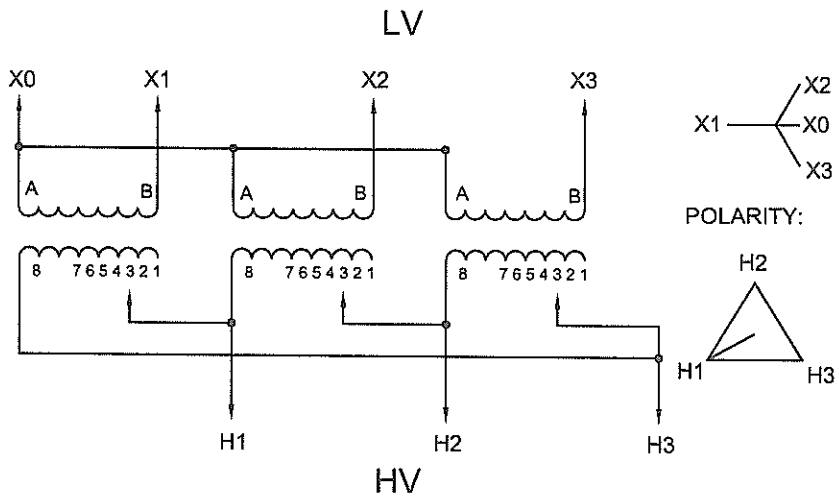

PRODUCT CODE: TRANSFORMERS	FEDERAL ID NO.			
4	UPDATE FORMAT EATON & CHANGE DESC. TO HV/LV	J.C.S.	C.B.	10/JUN/14
REV	DESCRIPTION	DFTR	APPD	DATE
REVISIONS				

DFTR HEG	DATE 12/01/01	THE INFORMATION ON THIS DOCUMENT WAS CREATED BY EATON CORPORATION. IT WAS DISCLOSED IN CONFIDENCE AND IS ONLY TO BE USED FOR THE PURPOSE IN WHICH IT WAS SUPPLIED.	EATON
APPD EER	DATE 12/01/01	TITLE DRY TYPE TRANSFORMER WIRING SCHEMATIC	
S.O.		TYPE DRY TYPE TRANSFORMER	WIRING
REVISION 04		G.O.	DWG 280B / SHEET 1 OF 01

GO/NEG-Alt-Date:		Job Name:
LCS0023060-0029-5/27/2020		Int'l African American Museum _CUIE1031X8K1
Item Number:	Catalog Number: V48M28F3016CU	Designation: T2-L2M-L2D

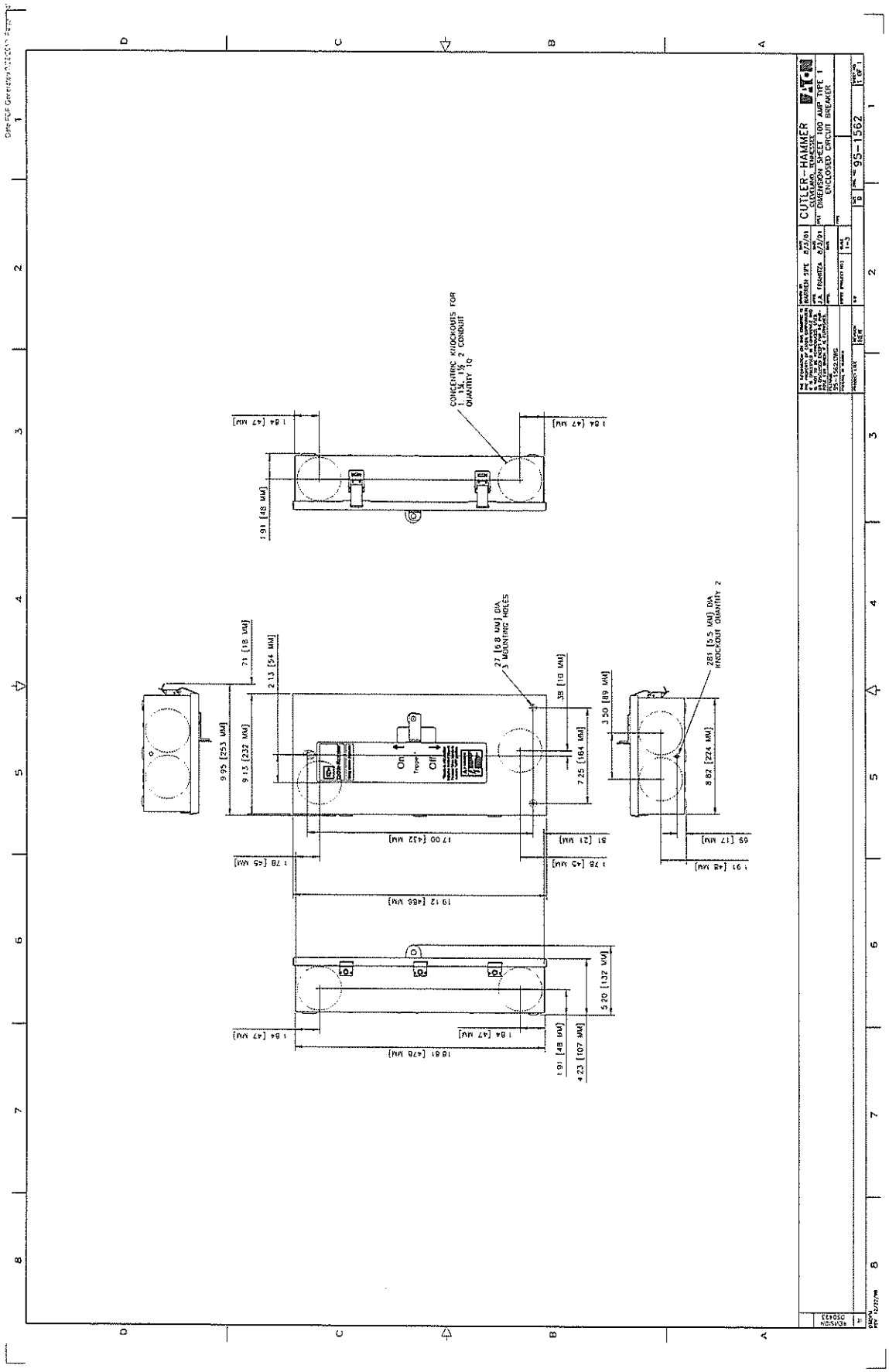

GO/NEG-Alt-Date:		Job Name:
LCS0023060-0029-5/27/2020		Int'l African American Museum _CUIE1031X8K1
Item Number:	**Catalog Number:**	**Designation:**
	SHFD3100L	100A ECB

5/22/20 Bulletin #15

Add VAV-2-15:.....$770

Revised Total Equipment Cost with Bulletin #15 Changes:

Due to the unpredictable fluctuations in steel pricing, our quotation will be valid for 30 days from the date of the quote. We must receive written purchase order within 30 days from the date of the quote and release for fabrication within 60 days from date of purchase order. If these conditions are not met, we reserve the right to evaluate the pricing at the time of the order.

Please consult your YORK/JOHNSON CONTROLS sales representative if the project timeline will affect the length of warranty, require the use of temporary cooling, or requires startup of the equipment to be delayed. Provisions for temporary cooling, extended warranties, and extreme delays in commissioning are not included in the above quote unless expressly stated. Please contact local sales office if commissioning will occur six (6) months or more after the ship date to obtain pricing information. Also please inquire about product lead times at time of bid if work is subject to an accelerated timeline, lead times are dynamic and are subject to change, but an estimated lead time can be provided at time of the bid for your reference.

Thank you for your consideration of JCI products for this project. If you have any questions regarding this offer or if I can be of any other assistance, please contact me at either Daniel.j.duffrin@jci.com or 843-614-0592.

Sincerely,

Dan Duffrin

Account Executive
Johnson Controls Incorporated
YORK Products and Services

Confidential and Proprietary - Johnson Controls Inc
Distribution to other than the named recipient is prohibited
© 2019 Johnson Controls, Inc. All rights reserved

PROPOSED CHANGE ORDER

WATSON ELECTRICAL CONSTRUCTION CO.
3215 Fortune Dr.
Suite 109
Charleston, SC 29418
Telephone: 843.414.0700
Fax: 843.414.0704

PCO #	**13**
Date:	6/15/2020
Project Name:	IAAM Museum
Project Number:	IAAM Museum
Page Number:	1

Turner Construction / Brownstone Management and Design
Contact: Walt Lewis
4055 Faber Place
Suite 202
North Charleston, South Carolina 29405
Contact: Walt Lewis
E-mail: wlewis@tcco.com

Work Description

SCOPE OF WORK:
This change proposal pertains to Bulletin #15 and documents received through Procore dated 05-19-2020.

INCLUSIONS:
Lighting - changes are NET changes

AR1	28.00
AD1	6.00
AC3	8.00
AR3 (6ft)	-1.00
AR3 (12ft)	1.00
AD3	7.00
AD5	6.00
AU1	-1.00
AW1	-1.00

Power and Wiring Devices.
ADD (16) Duplex receptacles.
ADD (10) Quad receptacles.
ADD (1) FB7 floor box.

AV-IT Room E201
Reconfigure "Rack" power requiremetns
ADD (12) 120 volt Quad recepatcales.
ADD (5) L5-30R receptacles.
REMOVE (16) L6-30 receptacles.
Additional AV openings and empty raceways.

Food Service Room 209:
ADD panel AP-I2D to room 209.
Install food service powr feeds and devices per "Kitchen Equipment Schedule"

Mechanical:
ADD VAV 2-15 - no cost
DEDUCT VAV 1-06 - no cost
DEDUCT EF-2
VAV 1-13 Changed from 480 volt to 208 volt.

ORIGINAL

PROPOSED CHANGE ORDER

WATSON ELECTRICAL CONSTRUC
3215 Fortune Dr.
Suite 109
Charleston, SC 29418

Turner Construction / Brownstone Management and Design
4055 Faber Place
Suite 202
North Charleston, South Carolina 29405

Distribution:
ADD Panel AP-L2D - includes feeeder conduit, wire. Panel and equipment supplied by others.
ADD new transformer - includes conduit, wire, mounting, and installation of transformer Equipment and lugs furnished by others.

Fire Alarm:
Raceways
System cabling and devices per attached subcontractor pricing.

EXCLUSIONS:
Any new panelboards or distribution equpment including breakers, switches, enclosed breakers, and transformers.
Secutiy or telcomm cabling, devies, or equipment. raceways only as specified in Bulletin #15

CLARIFICATIONS:
FB2 Floor Boxes - floor box package has been ordered and received No deduct available Custom package order
FBRF and SF Underfloor wiring system - no cost change.
Panel AP-L2D - Panel and supply breaker / switch, enclosed circuit breaker and transformer are furnished by others. Labor only to install panel and related equipment.
All breakers furnished by others, installed by Watson
ALL new lighting seismic supports by others.
This price is based on Bulletin #15, only highlighted / clouded areas

We reserve the right to correct this quote for errors and omissions

This quote covers direct costs only and we reserve the right to claim for impact and consequential costs.
This price is good for acceptance within 10 days from the date of receipt.
We request a time extension of 18 days.
We will supply and install all materials, labor, and equipment as per your instructions on **<CCN 13>.**

Itemized Breakdown

System	Material($)	Labor Hrs
|| LIGHTING	554.41	148.95
|| DISTRIBUTION	819.16	66.44
|| BRANCH WIRING	-62.55	-6.72
|| WIRING DEVICES	630.51	88.72
|| FOOD SERVICE	1,033.07	88.94
|| FIRE ALARM AND SECURITY	170.66	14.86
|| DATA AND TELCOMM	1,810.94	158.13
Total	**4,956.20**	**559.32**

LIGHTING

Description	Qty	Net Price	U	Total Mat.	Labor	U	Total Hrs.
3/8" CONN SADDLEGRIP DC FOR FLEX / AC-90 / MC	96	78.74	C	75.59	26.00	C	24.96
WIRE CONN RED	218	10.41	C	22.69	15.00	C	32.70
4x 1 1/2" SQ BOX COMB KO	8	46.67	C	3.73	30.00	C	2.40
4x 2 1/8" SQ BOX 3/4" KO	-1	84.73	C	-0.85	30.00	C	-0.30
4" SQ 1G PLSTR RING 1/2" RISE	8	30.88	C	2.47	15.00	C	1.20
3/16x 1 1/4 FENDER WASHER - PLTD STL	-2	4.99	C	-0.10	1.28	C	-0.03
3/16x 3 TGL BOLT SPRING WING P/H	-4	9.96	C	-0.40	10.00	C	-0.40
#8x 1/2 P/H SELF-TAP SCREW	16	6.72	C	1.08	5.00	C	0.80
SQ BOX MNTG BRKT TO 2 1/2-3 1/2" STUD	8	70.00	C	5.60	7.60	C	0.61
AR312	1	0.00	E	0.00	1.03	E	1.03

ORIGINAL

PROPOSED CHANGE ORDER

WATSON ELECTRICAL CONSTRUC
3215 Fortune Dr.
Suite 109
Charleston, SC 29418

Turner Construction / Brownstone Management and Design
4055 Faber Place
Suite 202
North Charleston, South Carolina 29405

Description	Qty	Net Price	U	Total Mat.	Labor	U	Total Hrs.
AR3	28	0.00	E	0.00	1.22	E	34.16
AD3 / AD5	19	0.00	E	0.00	1.25	E	23.75
AU1	-1	0.00	E	-0.00	0.77	E	-0.77
AC3	8	0.00	E	0.00	0.39	E	3.12
48" 3500K 86 CRI 32W LAMP - T8	112	0.00	E	0.00	0.10	E	11.20
13W 3500K 82 CRI LAMP - T4 2-PIN GX23	19	0.00	E	0.00	0.22	E	4.18
100A-120V IF LAMP	8	0.00	E	0.00	0.15	E	1.20
#12 MC CABLE W/2C CONTROL	494	900.00	M	444.60	18.50	M	9.14
Totals	**1,035**			**554.42**			**148.95**

DISTRIBUTION

Description	Qty	Net Price	U	Total Mat.	Labor	U	Total Hrs.
1" CONDUIT - EMT	129	137.76	C	177.71	5.50	C	7.09
1" CONN COMP STL - EMT	2	45.89	C	0.92	16.00	C	0.32
1" COUPLING COMP STL - EMT	13	49.17	C	6.39	35.00	C	4.55
1" SNAP CLOSE CLIP - BTM MNT ON 1/4" FLNG HNGF	13	112.24	C	14.59	6.00	C	0.78
3/4" FLEX - STEEL	4	111.64	C	4.47	5.00	C	0.20
1 1/4" FLEX - STEEL	4	267.29	C	10.69	10.00	C	0.40
3/4" CONN FLEX DC SQUEEZE STRAIGHT	1	103.97	C	1.04	12.60	C	0.13
1 1/4" CONN FLEX DC SQUEEZE STRAIGHT	1	527.27	C	5.27	18.00	C	0.18
# 6 THHN BLACK	710	476.13	M	338.05	12.00	M	8.52
# 6 BARE COPPER - 7-STRAND	20	311.69	M	6.23	18.00	M	0.36
COMPRESSION LUG - CU W/ 1- 13/64" HOLE - # 8 CU W	3	228.21	C	6.85	30.00	C	0.90
COMPRESSION LUG - CU W/ 1- 9/32" HOLE - # 2 CU W	4	450.39	C	18.02	50.00	C	2.00
# 4 - #4/0 TO 1/2 - 1" PIPE GRD CLAMP	1	31.05	E	31.05	0.55	E	0.55
1 5/8x 1 5/8x 12G STRUT SLOTTED HOLE GALV	5	150.28	C	7.51	12.00	C	0.60
5/16-18 SPRING NUT 2 7/16 OR 3 1/4" STRUT	4	269.66	C	10.79	6.00	C	0.24
1/4-20x 1 3/4 WEDGE ANCHOR - 1 1/8" MIN DEPTH	4	30.00	C	1.20	16.00	C	0.64
#10 TO #12x 1 PLAS ANCHOR (1/4)	4	0.98	C	0.04	16.00	C	0.64
1/4-20 MACHINE SCREW ANCHOR	4	23.39	C	0.94	20.00	C	0.80
5/16-18 HEX NUT - PLTD STL	4	3.30	C	0.13	2.70	C	0.11
5/16" FLAT WASHER - PLTD STL	4	2.54	C	0.10	1.75	C	0.07
#10x 1 P/H SELF-TAP SCREW	4	9.60	C	0.38	5.50	C	0.22
100A 4W-24CCT RCSD BREAKER BPB	1	0.00	E	0.00	3.40	E	3.40
100A 3P BREAKER MOLDED CASE - OPEN	1	0.00	E	0.00	1.28	E	1.28
60A 3P BREAKER MOLDED CASE - NEMA 1	1	0.00	E	0.00	3.00	E	3.00
100A 600V DSN SW FUSIBLE - NEMA 1	1	0.00	E	0.00	4.40	E	4.40
100A FUSE 600V TIME DELAY CLASS RK5	3	58.93	E	176.79	0.35	E	1.05
30KVA 3PH TRANSFORMER - GP - WALL MNT	1	0.00	E	0.00	24.00	E	24.00
Totals	**946**			**819.16**			**66.43**

BRANCH WIRING

Description	Qty	Net Price	U	Total Mat.	Labor	U	Total Hrs.
3/4" ELBOW 90 DEG - RMC - GALV	-8	573.25	C	-45.86	0.00	C	-0.00
3/4" CONDUIT - PVC40	-44	24.50	C	-10.78	4.50	C	-1.98
3/4" COUPLING - PVC	-8	13.22	C	-1.06	0.00	C	-0.00
#12 THHN SOLID BLACK	-44	110.13	M	-4.85	6.00	M	-0.26
BRUSHED AL FLOOR BOX	-4	0.00	E	-0.00	1.12	E	-4.48
Totals	**-108**			**-62.54**			**-6.72**

WIRING DEVICES

ORIGINAL

PROPOSED CHANGE ORDER

WATSON ELECTRICAL CONSTRUC
3215 Fortune Dr.
Suite 109
Charleston, SC 29418

Turner Construction / Brownstone Management and Design
4055 Faber Place
Suite 202
North Charleston, South Carolina 29405

Description	Qty	Net Price	U	Total Mat.	Labor	U	Total Hrs.
#12/2C CABLE MC - ALUM ARMOR	520	439.73	M	228.66	30.00	M	15.60
3/8" CONN SADDLEGRIP DC FOR FLEX / AC-90 / MC	52	78.74	C	40.94	26.00	C	13.52
NMC OR MC/AC SUPPORT TO WOOD OR MTL STUD	26	46.71	C	12.14	43.00	C	11.18
CABLE/CONDUIT ANTI-RATTLE SUPPORT FOR MTL ST	104	31.49	C	32.75	4.00	C	4.16
WIRE CONN RED	62	10.41	C	6.45	15.00	C	9.30
#8x 1/2 WAFER HEAD SHEET MTL SCREW	156	3.93	C	6.13	1.10	C	1.72
1G DUPLEX REC PLATE - PLASTIC IVY	16	19.00	C	3.04	10.00	C	1.60
2G DUPLEX REC PLATE - PLASTIC IVY	10	38.00	C	3.80	12.00	C	1.20
20A 125V DUP REC - IVY (SG)	36	340.00	C	122.40	30.00	C	10.80
8000-1 - MULTI-BOX BRACKET - 1 BOX - 1-GANG	16	6.70	E	107.20	0.74	E	11.84
8000-2 - MULTI-BOX BRACKET - 1 BOX - 2-GANG	10	6.70	E	67.00	0.78	E	7.80
Totals	**1,008**			**630.52**			**88.72**

FOOD SERVICE

Description	Qty	Net Price	U	Total Mat.	Labor	U	Total Hrs.
3/4" CONDUIT - EMT	289	80.13	C	231.58	5.00	C	14.45
1" CONDUIT - EMT	24	137.76	C	33.06	5.50	C	1.32
3/4" CONN COMP STL - EMT	26	28.41	C	7.39	14.00	C	3.64
1" CONN COMP STL - EMT	2	45.89	C	0.92	16.00	C	0.32
3/4" COUPLING COMP STL - EMT	30	30.59	C	9.18	30.00	C	9.00
1" COUPLING COMP STL - EMT	2	49.17	C	0.98	35.00	C	0.70
3/4" ELBOW 90 DEG - RMC - GALV	8	573.25	C	45.86	0.00	C	0.00
1/2 OR 3/4" SNAP CLOSE CLIP - BTM MNT ON 1/4" FLN(	31	93.32	C	28.93	5.00	C	1.55
1" SNAP CLOSE CLIP - BTM MNT ON 1/4" FLNG HNGI	2	112.24	C	2.24	6.00	C	0.12
1/2 OR 3/4" CONDUIT+BOX SUPPORT - BTM MNT ON 1/	13	302.83	C	39.37	45.00	C	5.85
3/4" CONDUIT - PVC40	160	24.50	C	39.20	4.50	C	7.20
3/4" COUPLING - PVC	8	13.22	C	1.06	0.00	C	0.00
#10 THHN BLACK	119	193.13	M	22.98	7.50	M	0.89
#12 THHN SOLID BLACK	1,906	110.13	M	209.91	6.00	M	11.44
# 6 THHN BLACK	148	476.13	M	70.47	12.00	M	1.78
WIRE CONN RED	57	10.41	C	5.93	15.00	C	8.55
4x 1 1/2" SQ BOX COMB KO	13	46.67	C	6.07	30.00	C	3.90
4x 2 1/8" SQ BOX COMB KO	1	69.32	C	0.69	30.00	C	0.30
4" SQ BLANK COVER	14	16.67	C	2.33	8.00	C	1.12
FS 1G BOX 1x 1/2" HUB - TOP	10	16.82	E	168.20	0.60	E	6.00
GROUND SCREW W/ INSUL #12 LEAD	10	78.05	C	7.80	7.50	C	0.75
1/4-20x 1 3/4 WEDGE ANCHOR - 1 1/8" MIN DEPTH	20	30.00	C	6.00	16.00	C	3.20
#10x 3/4 P/H SELF-TAP SCREW	2	9.09	C	0.18	5.50	C	0.11
#8x 1/2 WAFER HEAD SELF-TAP STUD SCREW - 12G	26	2.61	C	0.68	5.00	C	1.30
1G DUP REC COVER - FS/FD	8	364.00	C	29.12	10.00	C	0.80
30A 125V 3W 1PH REC - BLK (SG)	2	673.75	C	13.48	40.00	C	0.80
20A 125V DUP REC - IVY (SG)	8	340.00	C	27.20	30.00	C	2.40
20A 125V DUP REC - GFCI IVY (SG)	2	900.00	C	18.00	35.00	C	0.70
8002-2 - SINGLE BOX BRACKET - 2-GANG	1	4.25	E	4.25	0.75	E	0.75
Totals	**2,942**			**1,033.06**			**88.93**

FIRE ALARM AND SECURITY

Description	Qty	Net Price	U	Total Mat.	Labor	U	Total Hrs.
3/4" CONDUIT - EMT	35	80.13	C	28.05	5.00	C	1.75
1" CONDUIT - EMT	78	137.76	C	107.45	5.50	C	4.29
1" CONN SS STL - EMT	6	33.87	C	2.03	12.00	C	0.72
1" COUPLING SS STL - EMT	3	37.15	C	1.11	6.00	C	0.18
3/4" CONN COMP STL - EMT	2	28.41	C	0.57	14.00	C	0.28

ORIGINAL

PROPOSED CHANGE ORDER

WATSON ELECTRICAL CONSTRUC
3215 Fortune Dr.
Suite 109
Charleston, SC 29418

Turner Construction / Brownstone Management and Design
4055 Faber Place
Suite 202
North Charleston, South Carolina 29405

Description	Qty	Net Price	U	Total Mat.	Labor	U	Total Hrs.
3/4" COUPLING COMP STL - EMT	1	30.59	C	0.31	30.00	C	0.30
3/4" 1-H STRAP - RMC - STEEL	2	17.03	C	0.34	4.00	C	0.08
3/4" 1-H STRAP - EMT - STEEL	3	10.44	C	0.31	4.00	C	0.12
3/4" CONDUIT SUPPORT FOR ROD OR FLNG	0	26.26	C	0.00	0.00	C	0.00
1/2 OR 3/4" SNAP CLOSE CLIP - SIDE MNT TO MTL STU	0	92.55	C	0.00	0.00	C	0.00
1" SNAP CLOSE CLIP - SIDE MNT TO MTL STUD SUP	6	111.34	C	6.68	36.00	C	2.16
3/4" FLEX - ALUMINUM	6	121.86	C	7.31	4.50	C	0.27
3/4" CONN FLEX DC SQUEEZE STRAIGHT	2	103.97	C	2.08	12.60	C	0.25
1/8" POLYTWINE	61	10.75	M	0.66	10.00	M	0.61
4x 1 1/2" SQ BOX COMB KO	0	46.67	C	0.00	0.00	C	0.00
#8 TO #10x 7/8 PLAS ANCHOR (3/16)	5	1.28	C	0.06	15.00	C	0.75
#10x 1 P/H SELF-TAP SCREW	5	9.60	C	0.48	5.50	C	0.28
#8x 1/2 WAFER HEAD SELF-TAP STUD SCREW - 12G	0	2.61	C	0.00	0.00	C	0.00
#8x 1/2 WAFER HEAD SHEET MTL SCREW	12	3.93	C	0.47	1.10	C	0.13
F/A PULL STATION 1-STAGE - ADDRESSABLE	1	0.00	E	0.00	0.50	E	0.50
F/A DETECTOR - IONIZATION SMOKE - ADDRESSABLE	0	0.00	E	0.00	0.00	E	0.00
F/A DETECTOR BASE LOW PROFILE - ADDRESSABLE	0	0.00	E	0.00	0.00	E	0.00
F/A SURFACE BOX (RED) PULL STATION - 1 GANG	1	0.00	E	0.00	0.00	E	0.00
F/A VERIFICATION - PER INITIATING DEVICE	1	0.00	E	0.00	0.00	E	0.00
8002-1 - SINGLE BOX BRACKET - 1-GANG	3	4.25	E	12.75	0.73	E	2.19
Totals	**233**			**170.67**			**14.86**

DATA AND TELCOMM

Description	Qty	Net Price	U	Total Mat.	Labor	U	Total Hrs.
1" CONDUIT - EMT	1,169	137.76	C	1,610.41	5.50	C	64.30
1" CONN COMP STL - EMT	36	45.89	C	16.52	16.00	C	5.76
1" COUPLING COMP STL - EMT	113	49.17	C	55.56	35.00	C	39.55
3/4" 1-H STRAP - EMT - STEEL	140	10.44	C	14.62	4.00	C	5.60
4 11/16x 2 1/8" SQ BOX 1" KO	18	403.79	C	72.68	30.00	C	5.40
4 11/16" SQ BLANK COVER	18	122.24	C	22.00	8.00	C	1.44
#8 TO #10x 7/8 PLAS ANCHOR (3/16)	176	1.28	C	2.25	15.00	C	26.40
#10x 1 P/H SELF-TAP SCREW	176	9.60	C	16.90	5.50	C	9.68
Totals	**1,846**			**1,810.95**			**158.13**

Summary

General Materials		4,956.23
LIGHTING FIXTURES		16,144.00
FB7 FLOOR BOX		500.00
Material Tax	(@ 9.000 %)	1,944.02
Material Total		**23,544.25**
JOURNEYMAN	(559.29 Hrs @ $45.00)	25,168.05
FOREMAN @ 15%	(83.89 Hrs @ $50.00)	4,194.50
SAFETY @ 3.5%	(19.58 Hrs @ $52.00)	1,018.16
PM&S	(662.76 @ 0.00 @ $6.00 + 0.000 % + 0.000 % + 0.000 %)	3,976.56
VDC	(662.76 @ 0.00 @ $1.00 + 0.000 % + 0.000 % + 0.000 %)	662.76
VEHICLES	(662.76 @ 0.00 @ $2.50 + 0.000 % + 0.000 % + 0.000 %)	1,656.90
CONSUMABLES	(662.76 @ 0.00 @ $0.30 + 0.000 % + 0.000 % + 0.000 %)	198.83
COVID-19 HEALTH & HYGIENE	(662.76 @ 0.00 @ $1.00 + 0.000 % + 0.000 % + 0.000 %)	662.76
Subtotal		**61,082.77**
Overhead	(@ 10.000 %)	6,108.28
Markup	(@ 5.000 %)	3,359.55

ORIGINAL

PROPOSED CHANGE ORDER

WATSON ELECTRICAL CONSTRUC
3215 Fortune Dr.
Suite 109
Charleston, SC 29418

Turner Construction / Brownstone Management and Design
4055 Faber Place
Suite 202
North Charleston, South Carolina 29405

Summary (Cont'd)

Subtotal		**70,550.60**
FIRE ALARM	($11,134.00 + 0.000 % + 0.000 % + 10.000 %)	12,247.40
Subtotal		**82,798.00**
Final Amount		**$82,798.00**

CLIENT ACCEPTANCE

PCO # 13
Final Amount: $82,798.00

Name: _____

Date: _____

Signature: _____

Change Order #: _____

I hereby accept this quotation and authorize the contractor to complete the above described work.

ORIGINAL

Johnson Controls
1141 Remount Rd. Suite 400
North Charleston, SC 29406
www.jonsoncontrols.com

Jay Wohlford
Building Systems Sales Representative
Email: ron.wohlford@jci.com

June 2, 2020

Proposal # 210-417650

To: Watson Electric
Attn: Dale Winovich

Re: International African American Museum Bulletin #15 Fire Alarm Changes

- **Fire Alarm System:** Per revised plans in Bulletin #15, below is the associated change order pricing for additional fire alarm devices. This includes a net of (13) smokes, (1) S/V, and (1) Relay added.

- **TOTAL**

Total, including applicable tax.....$ 11,134.00

OVERVIEW:

THIS QUOTATION INCLUDES THE FOLLOWING:
Equipment as listed
SC Sales Tax
Freight (F.O.B. shipping point)
Revised Shop Drawings
Technical installation support including programming
1 functional system certification test
1 AHJ test
1 Test with state officials
One year standard warranty

THIS QUOTATION DOES NOT INCLUDE THE FOLLOWING:
UL Certification or Monitoring
Raceway or standard electric boxes
120VAC power
Fire protection switches or gas solenoids
Cutting, drilling, patching, fire caulking or painting
Cost for CAD files

Cordially,

Jay Wohlford
Electronic System Sales Representative
Johnson Controls
1141 Remount Rd. Suite 400
North Charleston, SC 29406
540-537-0341 cell

Capital Electric

The electrical distributor of choice

PROPOSAL

Charleston Project Group

4801-A Rivers Ave

N. Charleston, SC 29406

Phone: 843-991-6832

Email: Herb.Aton@CapitalElectricSupply.COM

Company: Watson Electrical Construction

Attention: Dale Winovich

Email:

Project: IAAM Bulletin #15

Date: 06.15.2020

Capital Electric standard terms apply. Prices subject to change without notice unle

stated. **No federal, state, or municipal taxes included** unless definitely specifiec

Type	Quantity	Description	Unit Price	Unit	Extended
	1	LOT LIGHTING BULLETIN #15 PER BOM COPIED BELOW	$ 16,144.00	LOT	$ 16,144.00
	1	FLOOR BOX TYPE FB7	$ 500.00	EA	$ 500.00
		TOTAL BULLETIN #15			**$ 16,644.00**
		>>>DOES NOT INCLUDE TAX<<<			

QTY	Type	MFG	Part
6	AD1	USAI	B3RAF-25-20X3-30KU-40-S-WH-WH-NC1-UNV-D6E
8	AC3	LIGHTNET	1AW3OWD-830M-L320
-1	AR3-6	LEDA	3901LCGQS*-6-7-D-E
1	AR3-12	LEDA	3901LCGQS*-12-7-D-E
7	AD3	USAI	B4RCF-24C3-30KS-40-S-WH-WH-NCSM-UNV-D6E
6	AD5	USAI	B3RAF-25-20X3-30KS-40-S-WH-WH-NC1-UNV-D6E
28	AR1	DAYB	2FGG74L830-4-D-UNV-DIM
-1	AU1-4	DAYB	FSX435L840-UNV
-1	AW1-11FT	MATRIX	L3 SERIES CUSTOM SIZES AT ROUGHLY 11FT X 3FT

Capital Electric

The electrical distributor of choice

PROPOSAL

Charleston Project Group

4801-A Rivers Ave

N. Charleston, SC 29406

Phone: 843-991-6832

Email: Herb.Aton@CapitalElectricSupply.COM

Company: Watson Electrical Construction

Attention: Dale Winovich

Email:

Project: IAAM Bulletin #15

Date: 06.15.2020

Capital Electric standard terms apply. Prices subject to change without notice unle

stated. **No federal, state, or municipal taxes included** unless definitely specifiec

Type	Quantity	Description	Unit Price	Unit	Extended

Wulbern-Koval

1111 Morrison Drive
Charleston SC 29403

Phone
+1 (843) 577-7666
Fax
+1 (843) 577-7299

Quotation

Quote	Quote Date	Customer Order	Customer	Account Representative	Project
23657	07/01/20		99988	HOUSE	

Quote To

Bobby Teachey II
Brownstone Construction Group
4055 Faber Place Drive
Suite 202
North Charleston SC 29405

Phone +1 (843) 973-8660
Terms Net 10 Days

Ship To

Bobby Teachey II
Brownstone Construction Group / IAAM Project
c/o Wulbern-Koval
1111 Morrison Dr.
Charleston SC 29403

Phone +1 (843) 973-8660

Line	Quantity	Catalog Number / Description	Unit Price	Extended Amount
		*UPON AWARD OF BID, PRIOR TO FINAL QUOTE/ORDER, ONSITE FIELD MEASUREMENTS MUST BE TAKEN.		
		---		
		*STEELCASE DOORS ARE LOCKED RANDOMLY. FOR SPECIFIC HARDWARE OR MASTER KEY,OTHER SPECIFICATIONS MAY BE ADDED.		
		---		
		*PLEASE VERIFY FOR LARGE OFFICES THAT SLIDER DOORS WILL BE ALLOWED AS EGRESS. MANY LOCAL CODES DO NOT ALLOW NON-BREAKAWAY SLIDER DOORS AS ONLY MEANS OF EGRESS.		
		---		
		*IF SEISMIC BRACING AND ANCHORING IS REQUIRED, A STRUCTURAL ENGINEER WHO IS LICENSED IN SC WILL NEED TO HAVE IT DETAILED.		

		ADDITIONAL DISCOUNTS MAY BE AVAILABLE DEPENDING ON PURCHASING ENTITY. TAX EXEMPTIONS MAY ALSO APPLY.		

		Delivery and installation will be made during normal hours, 8:30 am to 4:30 pm, M-F, unless prior arrangements are made.		

		Special order furniture cannot be canceled or returned without special authorization from dealership.		

Accepted By _____ Date _____

Wulbern-Koval
1111 Morrison Drive
Charleston SC 29403

Phone
+1 (843) 577-7666
Fax
+1 (843) 577-7299

Quotation

Quote	Quote Date	Customer Order	Customer	Account Representative	Project
23657	07/01/20		99988	HOUSE	

Line	Quantity	Catalog Number / Description	Unit Price	Extended Amount
		This quote is for Budget Purposes only. All layouts, options, and finishes to be verified prior to final quote. ----------		
1	1	GPGS30 Panel-Wall, All glass, Standard, 30W FRAME :4799 PLATINUM METALLIC GLASS :6500 CLEAR GLASS OPTIONS * * OPTIONS * * CEIL HGT *OPT:CEILING HEIGHT 8FT 3IN 8 FT 3 INCH (99" TOTAL) POST EXT *OPT:POST EXTENSION RECESSED RECESSED UNIT WIDTH: 27.0000 27" PANEL WIDTH - List Add $0, TOTAL - $0	462.94	462.94
	Tag For	SPCL: W27/99		
2	3	GPGS36 Panel-Wall, All glass, Standard, 36W FRAME :4799 PLATINUM METALLIC GLASS :6500 CLEAR GLASS OPTIONS * * OPTIONS * * CEIL HGT *OPT:CEILING HEIGHT 8FT 3IN 8 FT 3 INCH (99" TOTAL) POST EXT *OPT:POST EXTENSION RECESSED RECESSED UNIT WIDTH: 33.0000 33" PANEL WIDTH - List Add $0, TOTAL - $0	520.31	1,560.93
	Tag For	SPCL: W33/99		
3	2	GPGS40 Panel-Wall, All glass, Standard, 40W FRAME :4799 PLATINUM METALLIC GLASS :6500 CLEAR GLASS OPTIONS * * OPTIONS * * CEIL HGT *OPT:CEILING HEIGHT 8FT 3IN 8 FT 3 INCH (99" TOTAL) POST EXT *OPT:POST EXTENSION RECESSED RECESSED	468.50	937.00

Accepted By _____ Date _____

Wulbern-Koval
1111 Morrison Drive
Charleston SC 29403

Phone
+1 (843) 577-7666
Fax
+1 (843) 577-7299

Quotation

Quote	Quote Date	Customer Order	Customer	Account Representative	Project
23657	07/01/20		99988	HOUSE	

Line	Quantity	Catalog Number / Description	Unit Price	Extended Amount
		UNIT WIDTH: 39.0000 39" PANEL WIDTH - List Add $0, TOTAL - $0		
	Tag For	SPCL: W39/99		
4	6	GPGS40 Panel-Wall, All glass, Standard, 40W FRAME :4799 PLATINUM METALLIC GLASS :6500 CLEAR GLASS OPTIONS * * OPTIONS * * CEIL HGT *OPT:CEILING HEIGHT 8FT 3IN 8 FT 3 INCH (99" TOTAL) POST EXT *OPT:POST EXTENSION RECESSED RECESSED	527.06	3,162.36
	Tag For	W40/99		
5	2	GPGS48 Panel-Wall, All glass, Standard, 48W FRAME :4799 PLATINUM METALLIC GLASS :6500 CLEAR GLASS OPTIONS * * OPTIONS * * CEIL HGT *OPT:CEILING HEIGHT 8FT 3IN 8 FT 3 INCH (99" TOTAL) POST EXT *OPT:POST EXTENSION RECESSED RECESSED	586.69	1,173.38
	Tag For	W48/99		
6	4	GPDSSTF80 Door-Slider, Full glass, Tubular pull, Single application, 80W FRAME :4799 PLATINUM METALLIC GLASS-1 :6500 CLEAR GLASS OPTIONS * * OPTIONS * * CEIL HGT *OPT:CEILING HEIGHT 8FT 3IN 8 FT 3 INCH (99" TOTAL) POST EXT *OPT:POST EXTENSION RECESSED RECESSED DR HDWR *OPT:DOOR HARDWARE LOCK LOCK SLIDEOPT *OPT:SLIDE OPTION LEFT OX LEFT OX	2,407.50	9,630.00

Accepted By _____ Date _____

Wulbern-Koval
1111 Morrison Drive
Charleston SC 29403

Phone
+1 (843) 577-7666
Fax
+1 (843) 577-7299

Quotation

Quote	Quote Date	Customer Order	Customer	Account Representative	Project
23657	07/01/20		99988	HOUSE	

Line	Quantity	Catalog Number / Description	Unit Price	Extended Amount
		PULL OPT *OPT:PULL OPTION - PATHWAYS SLIDER PULL PULL OPTION - PATHWAYS SLIDER		
	Tag For	W80/99L		
7	3	GPDSSTF80 Door-Slider, Full glass, Tubular pull, Single application, 80W FRAME :4799 PLATINUM METALLIC GLASS-1 :6500 CLEAR GLASS OPTIONS * * OPTIONS * * CEIL HGT *OPT:CEILING HEIGHT 8FT 3IN 8 FT 3 INCH (99" TOTAL) POST EXT *OPT:POST EXTENSION RECESSED RECESSED DR HDWR *OPT:DOOR HARDWARE LOCK LOCK SLIDEOPT *OPT:SLIDE OPTION RIGHT XO RIGHT XO PULL OPT *OPT:PULL OPTION - PATHWAYS SLIDER PULL PULL OPTION - PATHWAYS SLIDER	2,407.50	7,222.50
	Tag For	W80/99R		
8	2	GPMES Mini-End, Small BASIC :4799 PLATINUM METALLIC OPTIONS * * OPTIONS * * CEIL HGT *OPT:CEILING HEIGHT 8FT 3IN 8 FT 3 INCH (99" TOTAL)	162.00	324.00
9	10	GPMEM Mini-End, Medium BASIC :4799 PLATINUM METALLIC OPTIONS * * OPTIONS * * CEIL HGT *OPT:CEILING HEIGHT 8FT 3IN 8 FT 3 INCH (99" TOTAL)	162.00	1,620.00
	Tag For	MEM		

Accepted By _____ Date _____

Wulbern-Koval
1111 Morrison Drive
Charleston SC 29403

Phone
+1 (843) 577-7666
Fax
+1 (843) 577-7299

Quotation

Quote	Quote Date	Customer Order	Customer	Account Representative	Project
23657	07/01/20		99988	HOUSE	

Line	Quantity	Catalog Number / Description	Unit Price	Extended Amount
10	3	GPMEL Mini-End, Large BASIC :4799 PLATINUM METALLIC OPTIONS * * OPTIONS * * CEIL HGT *OPT:CEILING HEIGHT 8FT 3IN 8 FT 3 INCH (99" TOTAL)	208.13	624.39
	Tag For	MEL		
11	1	GPMELF Mini-End, Large to floor BASIC :4799 PLATINUM METALLIC	208.13	208.13
	Tag For	MELF		
12	4	GPMEMF Mini-End, Medium to floor BASIC :4799 PLATINUM METALLIC	162.00	648.00
	Tag For	MEMF		
13	2	GPAL Adapter-L BASIC :4799 PLATINUM METALLIC OPTIONS * * OPTIONS * * CEIL HGT *OPT:CEILING HEIGHT 8FT 3IN 8 FT 3 INCH (99" TOTAL)	95.06	190.12
	Tag For	AL		
14	17	GPBTC Base trim-Continuous, 120W BASE :4799 PLATINUM METALLIC	63.00	1,071.00
15	2	GPCNRBT90 Base trim-Corner, 90 degree application BASE :4799 PLATINUM METALLIC	63.00	126.00
16	2	GPCTLS Ceiling track-Corner BASIC :4799 PLATINUM METALLIC OPTIONS * * OPTIONS * * CEIL TRK *OPT:POST EXT (CEILING TRACK)	100.13	200.26

Accepted By _____ Date _____

Wulbern-Koval
1111 Morrison Drive
Charleston SC 29403

Phone
+1 (843) 577-7666
Fax
+1 (843) 577-7299

Quotation

Quote	Quote Date	Customer Order	Customer	Account Representative	Project
23657	07/01/20		99988	HOUSE	

Line	Quantity	Catalog Number / Description	Unit Price	Extended Amount
		RECESSED RECESSED CEILCLIP *OPT:CEILING CLIP 1X5/8 TEG 1" X 5/8" DEEP TEGULAR		
17	11	GPCTS Ceiling track-Straight, 120W BASIC :4799 PLATINUM METALLIC OPTIONS * * OPTIONS * * CEIL TRK *OPT:POST EXT (CEILING TRACK) RECESSED RECESSED CEILCLIP *OPT:CEILING CLIP 1X5/8 TEG 1" X 5/8" DEEP TEGULAR	101.81	1,119.91
18	14	GPUFG Floor gripper-Universal, 16W	15.19	212.66
19	3	GPFS Feature strip-In line, Package quantity 25 BASIC :4799 PLATINUM METALLIC OPTIONS * * OPTIONS * * CEIL HGT *OPT:CEILING HEIGHT 8FT 3IN 8 FT 3 INCH (99" TOTAL) WALL APPL *OPT:WALL APPLICATION PAINT USE W/2 PAINTED COMPONENTS	321.75	965.25
20	3	GPFSH1 Feature strip-Half, 121H BASIC :4799 PLATINUM METALLIC OPTIONS * * OPTIONS * * WALL APPL *OPT:WALL APPLICATION PAINT USE W/2 PAINTED COMPONENTS	18.56	55.68
21	7	GPACOUST Acoustic packing	20.81	145.67
22	1	DELIVERY & INSTALL Labor includes warehouse, delivery and installation of glass panels, framing and hardware.	9,750.00	9,750.00

Accepted By _____ Date _____

Wulbern-Koval
1111 Morrison Drive
Charleston SC 29403

Phone
+1 (843) 577-7666
Fax
+1 (843) 577-7299

Quotation

Quote	Quote Date	Customer Order	Customer	Account Representative	Project
23657	07/01/20		99988	HOUSE	

Line	Quantity	Catalog Number / Description	Unit Price	Extended Amount
		Panels to be stair carried for safety/quality assurance purposes.		

QUOTATION TOTALS

Sub Total	41,410.18
9.0% TAXABLE-CHARLESTON CTY.	3,726.92
Grand Total	45,137.10

End of Quotation

Accepted By _____ Date _____

CPR COMMITTEE and/or COUNCIL AGENDA

TO: John J. Tecklenburg, Mayor

FROM: Frank Newham / Andrew Jones **DEPT.** Parks-Capital Projects

SUBJECT: LOW BATTERY SEAWALL REPAIRS-PHASE I PROFESSIONAL SERVICES CONTRACT

REQUEST: Approval of a Professional Services Contract with Insight Group in the amount of $42,000 to replace P161282 for vibration monitoring services. Attached is a memo explaining the need for extending the services and going over the $40,000.00 procurement threshold.

COMMITTEE OF COUNCIL: Ways & Means **DATE:** September 8, 2020

COORDINATION: This request has been coordinated with: *(attach all recommendations/reviews)*

	Yes	N/A	Signature of Individual Contacted	Attachment
CPR Committee Chair	☐	☐	Amy Wharton	☐
Corporate Counsel	☑	☐	[illegible]	☐
Director of SW Mgmt	☒	☐	[illegible]	☐
MBE Manager	☐	☐		☐

FUNDING: Was funding previously approved? Yes ☒ No ☐ N/A ☐

If yes, provide the following: Dept/Div Parks-Capital Projects Acct # 051160-58238

Balance in Account $42,000.00 Amount needed for this item $42,000.00

Project Number CP1526

NEED: Identify any critical time constraint(s).

CFO's Signature: Amy Wharton

FISCAL IMPACT: **Approval of the Professional Services Contract with obligate $42,000.00 of the $36,108,771.21 project budget. The funding sources for this project are: Hospitality Funds ($15,087,957.53), Municipal Accommodations Tax Funds ($15,548,816.00), CPW Contribution ($5,071,997.68), and Charleston County Accommodations Tax Fees ($400,000.00).**

Mayor's Signature: [signature]
John J. Tecklenburg, Mayor

ORIGINATING OFFICE PLEASE NOTE: A FULLY STAFFED/APPROVED (except Mayor's Signature) PACKAGE IS DUE IN THE CLERK OF COUNCIL'S OFFICE NO LATER THAN 10:00 A.M THE DAY OF THE CLERK'S AGENDA MEETING.

JOHN J. TECKLENBURG
Mayor

City of Charleston
South Carolina
Department of Stormwater Management

MATTHEW FOUNTAIN PE, PG
Director

MEMORANDUM

To: Mayor John Tecklenburg and City Council

From: J. Frank Newham
Senior Engineering Project Manager

Date: August 21, 2020

Subject: Additional vibration monitoring – Low Battery Phase One

---

To explain the cost increase of the vibration monitoring services at the Low Battery:

- The original contract with InSight was for a pre-construction survey and ambient vibration monitoring so we would have a baseline to compare the levels preconstruction to those during construction. They also included six weeks of construction monitoring. This PO was for $22,050.00.
- Work began on the site in January 2020. The initial work included demolition of the seawall and roadway. We considered these activities to generate the most noise and vibration.
- After the six week period, we were still receiving sporadic complaints from residents about excessive vibration. The monitors were showing that the recorded vibration levels were significantly below established thresholds. In caution, we asked InSight to extend their monitoring. This was covered in two subsequent adjustments to the PO. The first was $100.00 on 6/9/20 and the second was $2,600.00 on 6/30/20. This brought the PO to $24,750.00.
- We are still receiving complaints about vibration, though none of the monitors has recorded levels remotely close to the established threshold levels. It has been decided to extend the monitoring through September in case we receive more complaints. To accomplish this, Insight has submitted a contract modification for $17,250.00. This will bring the PO to $42,000.00. To date, $24,350.00 of the total $42,000.00 has been paid. Please let me know if you have any questions

2 George Street • Suite 2100 • Charleston, South Carolina 29401
Tel: (843) 724-3754 • Fax: (843) 973-7261

City of Charleston
Contract for Professional Services

THIS CONTRACT, made this ___day of_____, 2020 by and between

The Owner: City of Charleston
Department of Stormwater Management
2 George Street
Charleston, SC 29401

and the A/E: Insight Group, LLC
3359 Meeting Street
North Charleston, SC 29405

WHEREAS the Owner requires the delivery of professional pre-construction survey and vibration monitoring services ("Work"), for the reconstruction of the Low Battery Phase I Project ("Project") as outlined in the Proposals dated July 19, 2019 and August 18, 2020 and the Change Orders dated June 9, 2020 and June 30, 2020 ("Service" or "Scope of Services"), prepared by Matt Silveston, P.E. for Insight Group, LLC, which are marked as Exhibit A and attached hereto as if fully written herein.

WHEREAS, the A/E, whose SC professional license is 5937, is prepared and qualified to provide such Services.

NOW THEREFORE, the Owner and A/E agree to all of the following:

The Services required herein are set forth in the attached EXHIBIT A, which shall be performed in accordance with the Terms and Conditions contained on pages 2 through 5 of this Contract. Services shall be performed and Payments for acceptable work shall be made in accordance with the following:

The **CONTRACT SUM** payable to the A/E shall be:

☐ Lump Sum of ..... $ XXXX.
☒ Actual costs based on A/E's Hourly Rate & Reimbursable Schedule attached as Exhibit A, Not-to-Exceed ..... $ 42,000.00.

REIMBURSABLES:

☐ Expenses shall be reimbursed at actual cost plus 10%, Not-to-Exceed..... $ XXXXX.
☐ Expenses included in Lump Sum

IN WITNESS WHEREOF, THE PARTIES HERETO HAVE ENTERED INTO THIS CONTRACT ON THE DAY AND YEAR FIRST WRITTEN ABOVE.

OWNER: City of Charleston

BY: _____
John J. Tecklenburg, Mayor

A/E: Insight Group, LLC

BY: _____
Signature

Bryan T. Shiver
Print or Type Name of A/E Representative

ITS: Partner

ATTACHMENTS

1. Exhibit A includes:
   a. Proposal dated July 19, 2019
   b. Proposal dated August 18, 2020
   c. Change Order dated June 9, 2020
   d. Change Order dated June 30, 2020

Terms and Conditions of the City of Charleston
Professional Services Contract

ARTICLE 1 - GENERAL

A. The A/E agrees to provide professional services to the Owner as required by the Scope of Services requested by the Owner as set forth in Exhibit A.

B. The A/E accepts the relationship of trust and confidence established between A/E and Owner by this Contract.

C. The A/E covenants with the Owner that he/she possess the required degree of learning, skills, and experience that is ordinarily possessed by similarly situated professionals, that he/she will utilize reasonable and ordinary care and diligence in the exercise of his/her skills to accomplish the Scope of Services, and that he/she will use good professional judgment in performing the Scope of Services.

D. The A/E agrees to cooperate with the Owner and any other contractor in furthering the interests of the Owner.

ARTICLE 2 – A/E'S RESPONSIBILITIES

A. The A/E shall designate one or more representatives to be assigned for the duration of the Project. These representatives shall be authorized to act on behalf of the A/E in all matters related to the A/E's performance(s) under this Contract. The A/E shall not replace a designated representative without notice to the owner and with good cause shown.

B. The A/E shall notify the Owner, in writing, of information necessary from the Owner for the project. A/E shall allow sufficient time for Owner to acquire and respond with such information.

C. The A/E shall provide all Scope of Services using persons, including the staff of A/E's Consultants and Additional Consultants, who possess the required degree of learning, skills, and experience that is ordinarily possessed by similarly situated professionals, that they will utilize reasonable and ordinary care and diligence in the exercise of their skills to accomplish the Scope of Services, and that they will use good professional judgment in performing the Scope of Services.

D. The A/E shall manage and coordinate the A/E's services, consult with the Owner, research applicable design criteria, attend all Project meetings, communicate with members of the Project team and report progress to the Owner.

E. The A/E shall have, at the time of execution and for the duration of this Contract, all professional and business insurance, licenses and permits required to provide the required Services in the City of Charleston and as required by this Contract.

F. The A/E shall be entitled to rely on the accuracy of information provided by the Owner. Notwithstanding the foregoing, A/E shall review all information provided by the Owner and shall give prompt and timely notice to the Owner of any apparent deficiencies or inconsistencies in the information furnished by the Owner.

G. The A/E shall be entitled to additional compensation if required to provide services beyond those Services set forth in Exhibit A. The A/E shall be compensated for these additional services as agreed by both parties based on projected time and expense for the additional services.

ARTICLE 3 - OWNER'S RESPONSIBILITIES

A. The Owner shall provide all available programmatic and budgetary requirements for the Project.

B. The Owner shall designate one or more representatives with authority to act on the Owner's behalf in all matters related to the Owner's duties under this Contract.

C. The Owner shall provide the A/E with available information about the site and work area that is necessary for the A/E to perform the Services. The Owner shall cooperate with the A/E in the identification and acquisition of any additional information required.

D. The Owner shall make timely decisions on all issues related to the Contract and shall promptly advise the A/E of any errors or deficiencies in the A/E's performance under this Contract.

ARTICLE 4 – ADDITIONAL CONSULTANTS

A. It is agreed that the attached Exhibit A shall have identified all professional and technical disciplines and their providers required for the performance of the A/E's services, and that the fees for such personnel are incorporated into the Contract Sum set forth on page one (1) of this Contract.

B. Additional Consultants may be employed to perform portions of the Services under this Contract as required and approved by the Owner in advance. The A/E may apply a multiplier, not to exceed 1.1, to the approved fees of such Additional Consultants.

ARTICLE 5 – LIMITATIONS AND REPRESENTATIONS OF RESPONSIBILITY

A. The A/E shall not be responsible for the failure of any contractor, sub-contractor, vendor, or other Project participant, not under contract to the A/E, to fulfill its contractual responsibilities to the Owner or to comply with Federal, State, or local laws, regulations, and codes.

B. The A/E shall indemnify and save harmless the Owner and the Owner's officers, agents and employees, from and against all losses and claims, demands, payments, suits, actions, recoveries, and judgments of every nature and description brought or recovered against them by reason of any act, omission, or default of the A/E, its agents, or employees or subcontractors in the performance of this Contract. When the Owner submits notice, A/E shall promptly defend any aforementioned action at no cost to the Owner. This obligation shall survive the suspension or termination of this Contract. The limits of insurance coverage required herein shall not serve to limit this indemnity obligation. The recovery of costs and fees shall extend to those incurred in the enforcement of this indemnity.

ARTICLE 6 – DOCUMENTS

A. At the completion of the Project, the A/E shall provide to the Owner all contract documents, electronically, on a Computer Disk or thumb drive. Specifications shall be in Microsoft Word format and as-built drawings shall be in AutoCAD 2000 format.

B. All documents prepared or furnished by the A/E pursuant to this Contract are instruments of service and the A/E shall maintain an ownership and property interest therein.

C. Documents prepared or furnished by the A/E pursuant to this Contract may not be reused by the A/E on other projects or for other clients without the prior written permission of the Owner.

D. The A/E hereby grants to the Owner a non-exclusive license to reproduce or otherwise utilize A/E's documents for the purposes of constructing, operating, maintaining, repairing, using, renovating, expanding, modifying or otherwise enjoying the beneficial use of the Project at no additional cost to the Owner. The A/E shall incur no liability for the Owner's reproduction or reuse of the A/E's documents.

E. Consultants and Additional Consultants used by the A/E for the Services of this Contract shall be bound by the conditions of this Article.

ARTICLE 7 – PAYMENTS

A. The Owner shall make payments to the A/E for undisputed work, as scheduled on page 1 and in accordance with Title 29, Chapter 6 of the SC Code of Laws, as amended.

B. The A/E shall make payments to its Consultants and Additional consultants in accordance with Title 29, Chapter 6 of the SC Code of Laws, as amended.

C. If applicable, the A/E's request for payment under a NOT-TO-EXCEED contract shall be based on actual hours worked during the billing period, using the approved A/E's Hourly Rate and Reimbursable Schedule, not exceeding the scheduled amounts shown on Page 1 (one) of this Contract.

D. All requests for payment shall be submitted in the form and manner required by the Owner, and shall be accompanied by appropriate supporting documentation.

E. Payment under a Lump Sum contract shall be paid within thirty (30) days of receipt of the invoice. The invoice for the A/E's services shall be submitted to the City at the completion of the Scope of Services and after the City's acceptance of the work in its entirety.

ARTICLE 8 - DISPUTE RESOLUTION

The parties agree to attempt in good faith to resolve their disputes arising from a claim or controversy arising out of or relating to the contract. To the extent that the parties are unable to resolve a claim or controversy arising out of or relating to the Contract, the parties agree that any suit, action or proceeding arising out of or relating to the Contract shall be instituted and maintained only in a State or Federal court located in Charleston County, South Carolina. The A/E agrees that any act by the Owner regarding the Contract is not a waiver of either the State's sovereign immunity or the State's immunity under the Eleventh Amendment of the United States Constitution. As used in this paragraph, the phrase "the State" includes any governmental entity transacting business with the A/E pursuant to the Contract (including the Owner).

ARTICLE 9 - SUSPENSION AND TERMINATION

A. The Owner may direct the A/E to suspend performance under this Contract at any time.

B. The A/E may suspend its performance under this Contract if the Owner fails to make payments of undisputed amounts to the A/E as required by the terms of this Contract. Prior to the suspension of performance, the A/E shall give written notice to the Owner, and shall allow the Owner no fewer than twenty one (21) calendar days to make payment, otherwise the suspension may take effect without further notice by the A/E.

C. If the performance of Services is suspended by either party for a period of more than thirty (30) days but less than one hundred eighty (180) days due to no fault of the A/E, the A/E's time schedules shall be equitably adjusted. If a project is interrupted for one hundred eighty (180) days or more due to no fault of the A/E, the A/E's compensation shall be equitably adjusted to provide for expenses incurred in resuming the A/E's services and the time schedules for the remaining Services shall be equitably adjusted.

D. The Owner may terminate this Contract for the convenience of the Owner with not less than seven (7) days written notice to the A/E. The A/E shall be paid for all Work acceptably performed and reimbursable expenses incurred, up to the date of termination, and project closure costs as authorized by the Owner.

E. If either party fails to substantially perform according to the terms of this Contract, the other party may terminate this Contract upon not less than seven (7) days written notice. The notice of termination shall set forth with specificity the grounds for termination and may, at the sole option of the terminating party, give the other party a stated period of time in which it may cure the alleged breach.

ARTICLE 10 – INSURANCE

A. The Contractor shall purchase and maintain insurance to protect against claims that may arise out of the Contractor's operations under the Work of this Contract. The limits shall be for not less than the limits set forth in this Article, shall be written on an occurrence basis and shall be in force for the duration of the Contract.

B. The Contractor's Liability Insurance shall include all major divisions of coverage and is to be based on a Commercial basis including the following:

1. Premises – Operations.
2. Independent Contractor's Protective.
3. Products and Completed Operations.
4. Personal and Advertising Injury.
5. Contractual, including specified provisions for Contractor's obligations.
6. Broad Form Property Damage, including Completed Operations.
7. Owned, Non-Owned and Hired Vehicles.
8. Errors and Omissions.

C. The Insurance required by this Article shall be written for not less than the following limits or greater if required by law or other provisions in the Contract:

1. Commercial General Liability:	
a. General Aggregate (per project)	$ 2,000,000
b. Products/Completed Operations	$ 1,000,000
c. Personal and Advertising Injury	$ 1,000,000
d. Each Occurrence	$ 1,000,000
e. Fire Damage	$ 50,000
f. Medical Expense (any one person)	$ 5,000
2. Business Auto Liability (including all owned, non-owned, and hired vehicles):	
a. Combined Single Limit	$ 1,000,000
-OR-	
b. Bodily Injury & Property Damage (each)	$ 1,000,000
3. Workers Compensation	
a. State	Statutory
b. Employer's Liability	$ 100,000 Per Accident
	$ 500,000 Disease, Policy Limit
	$100,000 Disease, Each Employee

D. The A/E shall maintain Professional Liability Insurance for the duration of this Contract with a limit of $1,000,000 per claim and annual aggregate, or such other amount as the Owner may request. This policy shall remain in effect for a minimum of 12 months after the date of issuance of the final Certificate of Payment by the A/E.

E. The aggregate Limits of the Contractor's Insurance shall apply, in total for this Contract. This shall be indicated on the Certificate of Insurance as "Per Project", or in an attached policy amendment.

F. The Owner shall be listed as the certificate holder of the Contractor's Liability Insurance.

G. Certificates of Insurance shall be in the form of the latest edition of the ACORD 25 and shall be filed with the Owner prior to commencement of the Work. In addition to Certificates of Insurance, the Contractor shall supply a written endorsement to the Contractor's general liability insurance policy that names the Owner as an additional insured. The endorsement shall provide that the Contractor's liability insurance policy shall be primary, and that any liability insurance of the Owner shall be secondary and noncontributory. These Certificates shall contain a provision that coverages afforded under the policies will not be cancelled unless at least thirty (30) days prior written notice has been given to the Owner.

H. In no event shall any failure of the Owner to receive certified copies or certificates of policies required under this Article or to demand receipt of such certified copies or certificates prior to the Contractor's commencing the Work be construed as a waiver by the Owner of the Contractor's obligations to obtain insurance pursuant to this Article. The obligation to procure and maintain any insurance required by this Article is a separate responsibility of the Contractor and independent of the duty to furnish a certified copy or certificate of such insurance policies. Cancellation of insurance shall be grounds for the immediate termination of the Contract.

ARTICLE 11 – MISCELLANEOUS PROVISIONS

A. The A/E and Owner each bind themselves, their partners, directors, officers, successors, executors, administrators, assigns and legal representatives in respect to all provisions of the Contract. Neither party shall assign, sublet or transfer their interest in this Contract without the written consent of the other party.

B. This Contract represents the entire and integrated agreement between the Owner and A/E. It supersedes any and all prior and contemporaneous communications, representations and agreements, whether written or oral relating to the subject matter of this Contract.

C. Nothing in this Contract shall be construed to give any rights, contractual relationship or benefit to a third party against either the Owner or the A/E.

D. Nothing in this Contract shall prevent the A/E from employing any independent consultant, associate, or sub-contractor to assist in the performance of the Services.

E. Unless otherwise included in the Contract, nothing shall require the A/E to discover, handle, remove, or dispose of any hazardous or toxic materials in any form at the project site.

F. Time and Expense Records of the A/E's personnel, consultants, and reimbursable expenses pertaining to the Services shall be kept on a generally recognized accounting basis, and shall be available to the Owner for audit at mutually agreeable times and places for a period no less than 3 years after the conclusion of this Contract.

ARTICLE 12 – ERRORS AND OMISSIONS

A. Owner shall notify the A/E whenever the Owner believes the A/E's work contains errors or omissions, and the A/E shall agree to correct all errors and omissions without cost to the Owner.

B. The A/E agrees to pay the Owner for any costs the Owner is responsible for paying as a result of any A/E error or omission. Each error and omission shall constitute a separate offense.

June 9, 2020

City of Charleston
2 George Street
Charleston, SC 29401

Attn: Mr. Frank Newham, P.E.
O: 843-724-3713
newhamj@charleston-sc.gov

Re: Vibration Monitoring Contract Modification
Engineering Services
Reconstruction of the Low Battery Phase 1
Charleston, South Carolina
Insight Group Number: 19-0179

Dear Mr. Newham:

Insight Group (IG) appreciates this opportunity to provide support during the reconstruction of the sea wall. We understand that you have been receiving complaints from 86 and 108 Murray Blvd regarding the construction vibrations. To assist with assessments, additional engineering time will be necessary.

The cost for this modification will be as follows:

Service	Unit	Quantity	Unit Rate	Total
VIBRATION & CRACK MONITORING				
Senior Engineer, additional meetings	Per Hour	2/3 hr	$150	$100

We appreciate the opportunity to be of service on this project.

Sincerely,
INSIGHT GROUP, LLC

Matt Silveston, P.E.
Partner

June 30, 2020

City of Charleston
2 George Street
Charleston, SC 29401

Attn: Mr. Frank Newham, P.E.
O: 843-724-3713
newhamj@charleston-sc.gov

Re: Vibration Monitoring Contract Modification
2 Additional Vibration Monitors for 4 weeks
Reconstruction of the Low Battery Phase 1
Charleston, South Carolina
Insight Group Number: 19-0179

Dear Mr. Newham:

Insight Group (IG) appreciates this opportunity to provide support during the reconstruction of the sea wall. We understand that you have been receiving complaints from 86 and 108 Murray Blvd regarding the construction vibrations. To monitor this, Insight Group will install a vibration monitor at each property. The monitors will be set to trigger alerts to you if published threshold limits that lead to structural damage are exceeded. In addition, Insight Group will provide a weekly report of the recorded vibration levels.

The cost for this modification will be as follows:

Service	Unit	Quantity	Unit Rate	Total
VIBRATION & CRACK MONITORING				
Vibration Monitoring: Monitoring, Real-Time Alarms, Reporting	Per Monitor, Per Week	2 monitors x 4 weeks	$325	$2,600

We appreciate the opportunity to be of service on this project.

Sincerely,
INSIGHT GROUP, LLC

Matt Silveston, P.E.
Partner

July 19, 2019

INSIGHT GROUP
A CHRISTOPHER COMPANY

City of Charleston
2 George Street
Charleston, SC 29401

Attn: Mr. Frank Newham, P.E.
O: 843-724-3713
newhamj@charleston-sc.gov

Re: Proposal for Pre-Construction Survey & Vibration Monitoring
Reconstruction of the Low Battery Phase 1
Charleston, South Carolina
Insight Group Number: 19-0179R

Dear Mr. Newham:

Insight Group (IG) appreciates this opportunity to provide a pre-construction survey and vibration monitoring services for the proposed Phase 1 of the Reconstruction of the Low Battery. This proposal outlines the scope of vibration monitoring, crack monitoring, and pre and post-construction surveys. This proposal describes our current understanding of the project, Insight Group's scope, and associated fees.

If you have any questions concerning this proposal, please contact us.

Sincerely,
Insight Group, LLC

Sincerely,
INSIGHT GROUP

Matt Silveston, P.E.
Partner

William. Reg Christopher, P.E.
Partner

1 PROJECT INFORMATION

The project consists of re-constructing the sea wall and re-constructing the utilities in the adjacent roadbed. Due to the historic nature of the neighborhood, there are concerns regarding the impact of construction vibrations during pile driving on the nearby buildings. Figure 1 shows the proposed extent of Phase 1 and Figure 2 shows the proposed construction.

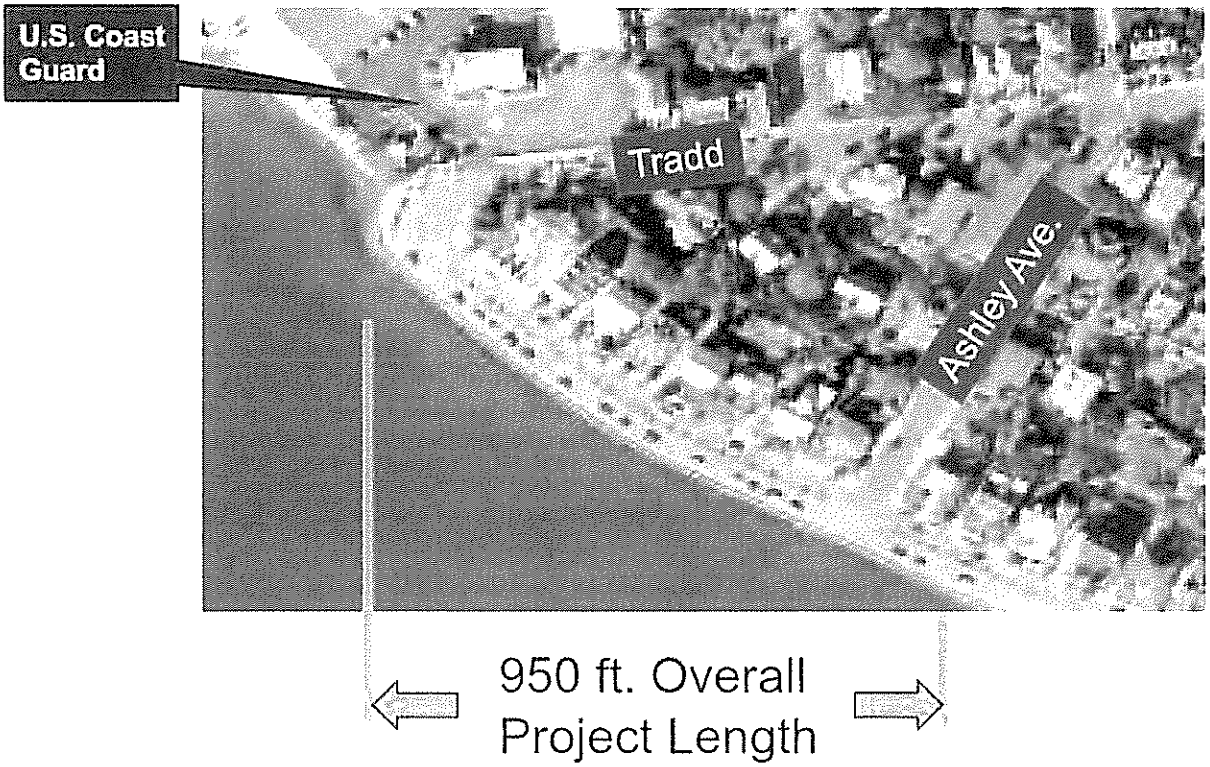

Figure 1. Proposed extent of Phase 1

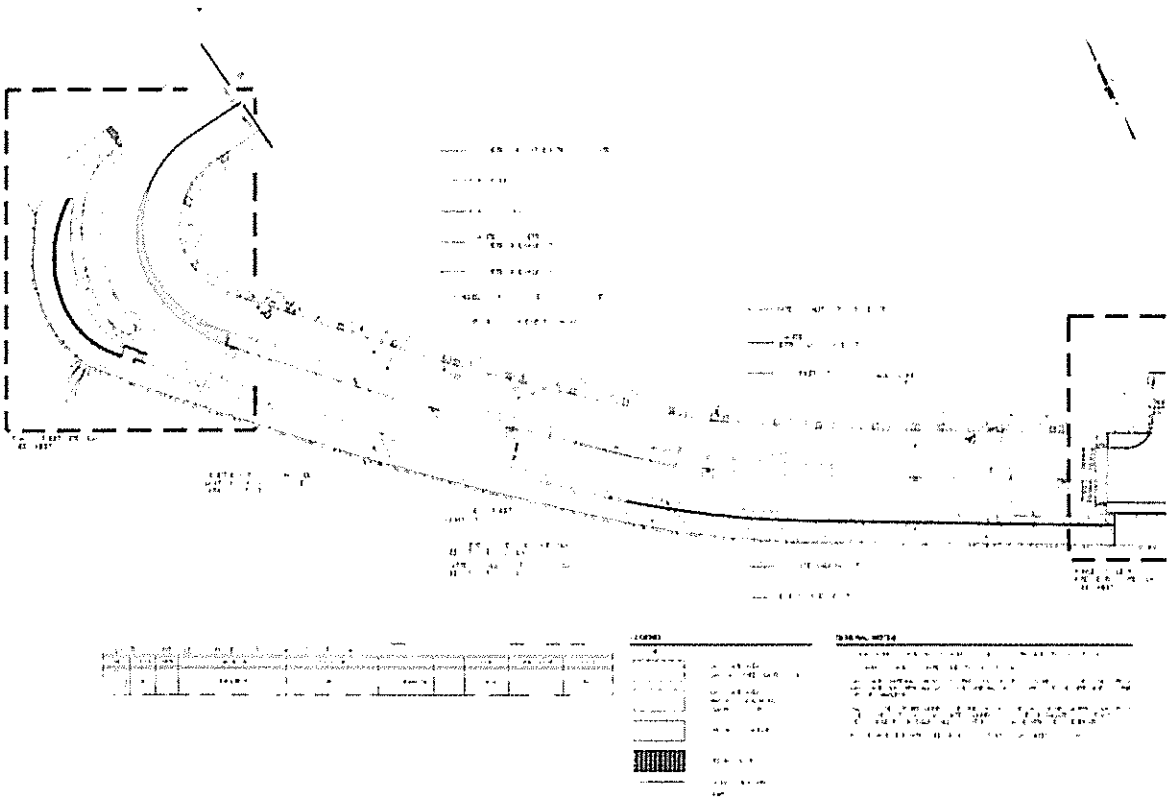

Figure 2. Proposed construction of Phase 1

2 SCOPE OF WORK

Insight Group will provide vibration monitoring, crack monitoring, and pre and post- construction surveys.

2.1 Vibration Monitoring

Insight Group will provide vibration monitoring for a 1 week period prior to the initiation of construction. This will provide a baseline of the typical vibration levels. Vibration monitoring will be performed during all demolition activities. During this period, there will be two (2) mobile vibration monitors that will collect vibration data. Being mobile, we will be able to assess how the surface vibrations vary with distance. We

anticipate vibration concerns from the surrounding neighborhood and will be able to place a vibration monitor adjacent to a structure to determine if vibration levels exceed threshold limits recommended USBM Safe Thresholds, which is typically used. If there are concerns by neighboring properties, we may recommend more stringent threshold levels.

We will maintain the 2 vibration monitors on site during demolition activities which we estimate to take 6 weeks. Insight Group's scope includes single weekly site visits to move the monitors.

Insight Group will provide vibration monitors that will be remotely monitored, with data available in real time in the cloud. Real-time alarms can be set to alert the team of vibrations approaching or exceeding the project thresholds. Insight Group will review the measurements and alert the City of Charleston, JMT and the contractor of vibrations exceeding the criteria specified in the USBM levels provided in Figure 3 below.

We can mobilize for vibration monitoring installation within two to three weeks of receiving Notice to Proceed.

US Bureau of Mines "Safe Level Threshold"

Figure 3. Recommended Vibration Threshold Limits

2.2 Instrumentation and Pre & Post-Construction Surveys

Based on our walk around the surrounding neighborhood, we have identified 33 structures within approximately 300 ft radius away from the sea wall, as shown in Figure 4. Walls and other non-buildings will not be documented. Insight Group will issue a notice to the property owner requesting permission to document the exterior of the structure with photographs and video for the pre and post condition survey. If permission is denied, our staff will document the structure from the street and sidewalks instead. We do not intend to document the interior of any structure.

Figure 4. Structures Scoped for Construction Monitoring

We will be available to mobilize for the pre-construction assessment within 1 week of receiving Notice to Proceed. The survey will take 2 weeks to complete and an additional 2 weeks to compile the videos and photographs. Upon completion, we will provide a USB drive with the videos, and photographs identified with addresses and notes.

Upon the completion of the pre-condition survey, we will identify locations which have damage and may necessitate further monitoring during construction. Based on the size of the survey area, we have assumed 10 crack monitors to be installed. These will be mounted on the structures with epoxy or fastened with

screws in locations we have permission to access. The crack monitors will be checked and documented weekly during demolition activities.

The post condition survey will be initiated once Notice to Proceed is granted by City of Charleston around substantial completion. The post-condition survey will take 2 weeks to perform the field assessment and 2 weeks to compile the report.

3 COMPENSATION

Insight Group will provide the services outlined in Section 2 for $22,050 based the following unit rates.

Table 1. Unit Rates for Services

Service	Unit	Quantity	Unit Rate	Total
VIBRATION & CRACK MONITORING				
Vibration Monitor Installation, One Time Setup and Calibration	Each	2	$1,500	$3,000
Vibration Monitoring: Monitoring, Real-Time Alarms, Reporting	Per Monitor, Per Week	2x1week baseline 2x6weeks active	$325	$4,550
Crack Monitors: Purchase and Installation	Each	10	$100	$1,000
Crack Monitor Documentation	Weekly	6	$250	$1,500
PRE and POST SURVEY				
Pre-Construction Survey, Buildings Exterior, Documentation and Report within Boundary	Lump Sum	1	$7,500	$7,500
Post-Construction Survey: Buildings Exterior, Documentation and Report within Boundary	Lump Sum	1	$4,500	$4,500
ADDITIONAL SERVICES				
Senior Engineer: Additional Meetings/ Consultation	Per hour		$150	
Pre-Construction Survey, *Additional* Structures Exterior Documentation and Report	Each		$300	
Post-Construction Survey: *Additional* Structures Exterior Documentation and Report	Each		$200	

August 18, 2020

INSIGHT GROUP

City of Charleston
2 George Street
Charleston, SC 29401

Attn: Mr. Frank Newham, P.E.
O: 843-724-3713
newhamj@charleston-sc.gov

Re: Vibration Monitoring Contract Modification
2 Additional Vibration Monitors for 15 weeks
Reconstruction of the Low Battery Phase 1
Charleston, South Carolina
Insight Group Number: 19-0179

Dear Mr. Newham:

Insight Group (IG) appreciates this opportunity to provide support during the reconstruction of the sea wall. We understand that you have been receiving complaints from 86 and 108 Murray Blvd regarding the construction vibrations. To monitor this, Insight Group will install a vibration monitor at each property. The monitors will be set to trigger alerts to you if published threshold limits that lead to structural damage are exceeded.

The $17,250 cost for this modification will be based on the following:

Service	Unit	Quantity	Unit Rate	Total
VIBRATION & CRACK MONITORING				
Vibration Monitoring: Monitoring, Real-Time Alarms, Reporting	Per Monitor, Per Week	2 monitors x 15 weeks	$325 per monitor per week	$9,750
Professional Engineer	Per Hour	20 hrs	$150 per hour	$3,000
Post Condition Survey	Lump Sum	1	$4,500	$4,500

We appreciate the opportunity to be of service on this project.

Sincerely,
INSIGHT GROUP, LLC

Matt Silveston, P.E.
Partner

DocuSign Envelope ID: F248D665-FE66-4CF3-B06D-4FA28A1124EF

CPR COMMITTEE and/or COUNCIL AGENDA

TO: John J. Tecklenburg, Mayor

FROM: Rodney Porter / Andrew Jones **DEPT.** Parks – Capital Projects

SUBJECT: ST. JULIAN DEVINE IMPROVEMENTS - PLAYGROUND CONSTRUCTION CONTRACT

REQUEST: Approval of a Construction Contract with Kompan, Inc. in the amount of $89,125.52 for the purchase and installation of new playground equipment at the St. Julian Devine Community Center. The playground equipment is being purchased through the City's cooperative purchasing membership with Omnia (US Communities).

COMMITTEE OF COUNCIL: Ways & Means **DATE:** September 8, 2020

COORDINATION: This request has been coordinated with: *(attach all recommendations/reviews)*

	Yes	N/A	Signature of Individual Contacted	Attachment
CPR Committee Chair	☐	☐	Amy Wharton	☐
Corporate Counsel	☑	☐	[illegible]	☐
Capital Projects Director	☑	☐	[illegible]	☐
MBE Manager	☒	☐	Ruth Jordan 4EFC2763EBBC4FF	☐

FUNDING: Was funding previously approved? Yes ☒ No ☐ N/A ☐

If yes, provide the following: Dept/Div Parks-Capital Projects Acct # 051588-58002

Balance in Account $89,125.52 Amount needed for this item $89,125.52

Project Number CP1620

NEED: Identify any critical time constraint(s).

CFO's Signature: Amy Wharton

FISCAL IMPACT: **Approval of this Construction Contract will obligate $89,125.52 of the project budget $3,110,000.00. Funding sources for this project are: 2015 General Fund Reserves ($250,000.00), 2018 General Fund Reserves ($400,000.00), Cooper River Bridge TIF ($2,340,000.00), and Charleston Parks Conservancy Contribution ($210,000.00).**

Mayor's Signature: [signature]
John J. Tecklenburg, Mayor

ORIGINATING OFFICE PLEASE NOTE: A FULLY STAFFED/APPROVED (except Mayor's Signature) PACKAGE IS DUE IN THE CLERK OF COUNCIL'S OFFICE NO LATER THAN 10:00 A.M THE DAY OF THE CLERK'S AGENDA MEETING.

John Tecklenburg
Mayor

City of Charleston
South Carolina
Department of Parks

Jason Kronsberg
Director of Parks

MEMORANDUM

TO: City Council
City of Charleston

FROM: Rodney H. Porter, PLA
Department of Parks

RE: CP1620 St. Julian Devine Community Center Playground

DATE: August 25, 2020

Please let this memorandum serve as clarification for the purchasing of the new playground at St. Julian Devine Community Center.

This playground proposal is provided by Kompan, Inc. of Houston, Texas. Please note the City of Charleston has a few other Kompan playground products in our parks. The playground will be purchased through a trusted cooperative purchasing organization for public sector procurement – Omnia Partners. The use of purchasing through this cooperative partnership reduces the cost of goods and ensures the maximum value with complete transparency of process. Kompan, Inc. has been fully vetted through Omnia Partners and is considered a best in-class national supplier of playgrounds. Their prices, products, and services have been reviewed and approved through a standard procurement process.

The City of Charleston frequently purchases playgrounds from a variety of vendors who are members of Omnia Partners.

Kompan, Inc. Omnia Partners Contract #2017001135.

823 Meeting Street, Charleston, SC 29403, 843/724-3457 phone 843/579-7692 fax

City of Charleston
Short Form Small Construction Contract

THIS CONTRACT, made this 25 day of August, 2020 by and between:

The Owner: City of Charleston
Department of Parks
823 Meeting Street
Charleston, SC 29403

and the Contractor: Kompan, Inc.
605 W Howard Lane, Ste 101
Austin, TX 78753

ARCHITECT ENGINEER – The A/E of Record for this Project is: N/A (City will act as A/E)

WHEREAS, the Owner requires the construction of the project ("the Work") identified as follows:

CP-1620 - St Julian Devine Playground
(Project Number) - (Project Name)

Short Description of the Project: Purchase and installation of new playground at St. Julian Devine Community Center.

WHEREAS, the Contractor, whose South Carolina license number is 09949294-4 (SC DOR#), is prepared and qualified to provide the City requested services as outlined in the Proposal dated August 12, 2020, attached hereto as Exhibit A and incorporated herein by reference, and in accordance with the General Terms and Conditions of this Contract.

IN WITNESS WHEREOF, THE PARTIES HERETO HAVE ENTERED INTO THIS CONTRACT ON THE DAY AND YEAR FIRST WRITTEN ABOVE.

OWNER: City of Charleston

BY: _____
John J. Tecklenburg
Mayor

CONTRACTOR:

BY: _____
(Signature of Contractor Representative)

(Name of Contractor Representative)

ITS: Eric Lewis - Treasurer

TERMS AND CONDITIONS

NOW THEREFORE, the Owner and Contractor agree to all of the following terms and conditions set forth in this Contract.

1. TIME OF PERFORMANCE:

    a. THE EFFECTIVE DATE of this Contract shall be the date written above.
    b. THE DATE OF COMMENCEMENT shall be the date indicated in the Notice to Proceed.
    c. THE DATE OF SUBSTANTIAL COMPLETION shall be 30 calendar days after the DATE OF COMMENCEMENT, subject to adjustment in accordance with the terms of this Contract.
    d. THE DATE OF FINAL COMPLETION shall be the date that the Work has been completed and accepted by the Owner.

2. PAYMENTS TO THE CONTRACTOR for acceptable Work performed shall be as follows:

    a. THE CONTRACT SUM OF $89,125.52 to be paid in response to the Contractor's Applications for Payment as certified by the A/E and subject to the terms of this Contract.
    b. THE CONTRACT SUM is based upon the following alternates, if any, which are described in the Contract Documents and are hereby accepted by the Owner:
    Not Applicable ☒

3. LIQUIDATED DAMAGES ARE AS FOLLOWS:

    It is acknowledged that the Contractor's failure to achieve substantial completion of the Work within the Contract Time provided by the Contract Documents will cause the Owner to incur substantial economic damages and losses of types and in amounts which are impossible to compute and ascertain with certainty as a basis for recovery by the Owner of actual damages, and that liquidated damages represent a fair, reasonable and appropriate estimate thereof. Accordingly, in lieu of actual damages for such delay, the Contractor agrees that liquidated damages may be assessed and recovered by the Owner as against Contractor and its Surety, in the event of delayed completion and without the Owner being required to present any evidence of the amount or character of actual damages sustained by reason thereof; therefore Contractor shall be liable to the Owner for payment of liquidated damages in the amount of One Hundred Dollars ($ 100.00) for each day that Substantial Completion is delayed beyond the Contract Time as adjusted for time extensions provided by the Contract Documents. Such liquidated damages are intended to represent estimated actual damages and are not intended as a penalty, and Contractor shall pay them to Owner without limiting Owner's right to terminate this Contract for default as provided elsewhere herein.

General Conditions

ARTICLE 1 – CONTRACT DOCUMENTS

A. The Contract Documents forming this Contract shall consist of the following:
    1. A fully executed Short Form Construction Contract (this document) and any listed attachments hereto (The Proposal dated August 12, 2020 attached hereto as Exhibit A; however, reference to "terms and conditions contained within the Master Agreement" is hereby expressly excluded);
    2. Performance and Payment Bonds;
    3. Notice to Proceed;
    4. All Change Orders and Change Directives.

In the event of a conflict between the terms and conditions contained in this Short Form Construction Contract and any of those contained in any attachments hereto (Exhibit A), the terms and conditions of this Short Form Construction Contract shall govern and control.

ARTICLE 2 – CONTRACTOR, OWNER, A/E PROVISIONS

A. The Contractor warrants to the Owner that:
1. it and its subcontractors (if any) are financially able to complete the Work;
2. it will perform all obligations, furnish all plant, material, equipment, tools, transportation, supplies and labor to complete the Work for the Contract Sum entered above;
3. it is authorized and licensed to do business in the State of South Carolina and the City of Charleston;
4. it will perform the Work with care and diligence and in a professional and workmanlike manner as required by this Contact; and,
5. it has visited the Work site and is reasonably apprised of the conditions in and around the Work area.

B. Contractor's Rights and Responsibilities
In addition to any other rights and responsibilities contained in this Contract, the Contractor shall:
1. not incur any expense chargeable to the Owner until this Contract has been authorized and fully executed by both the Owner and the Contractor;
2. pay for required construction permits or business license fees, labor, materials, equipment, tools, transportation, supervision, testing, etc., required to perform this Contract;
3. visit the Work site and obtain information to assist in familiarization with the Work site, its conditions and any limitations that would affect the performance of this Contract, including subsurface conditions;
4. have the right to rely on information contained in the Contract Documents, but shall give prompt and timely notice to the Owner of any apparent deficiencies or inconsistencies in the information furnished by the Owner or it's A/E;
5. be responsible for all construction means, methods, techniques, procedures and safety measures in the performance this Contract;
6. employ only persons skilled in the Work for which it is to do, employ an experienced superintendent to supervise the Work of its employees and subcontractors who shall be responsible for the acts or omissions of the Contractor's agents and employees or those of sub-contractors and their agents and employees acting on behalf of the Contractor;
7. not be responsible for the failure of any contractor, sub-contractor, vendor, or other project participant, not under a contract with the Contractor, to fulfill its contractual responsibilities to the Owner or to comply with Federal, State, or local laws, regulations, and codes;
8. have, at the time of execution and for the duration of this Contract, all professional and business insurance, licenses and permits required to provide the required Work in the State of South Carolina, the City of Charleston and as required by this Contract; and,
9. If during the course of executing the Work, the Contractor encounters material believed to be of archeological significance, then the Contractor shall immediately stop Work in the affected area and report the finding to the Owner and the A/E in writing. Except by written agreement of the Owner and Contractor, the Contractor shall not resume Work until the item of archeological significance has been removed by the Owner or the area has been rendered protected by the Owner.

C. Owner's Rights and Responsibilities
In addition to any other rights and responsibilities contained in this Contract, the Owner shall:
1. provide the Contractor with available information regarding the Project and the immediate area where the Project is located;
2. pay the Contractor for acceptable Work performed, in accordance with the provisions of this Contract;
3. if the Contractor fails to begin Work within fourteen (14) calendar days of the DATE OF COMMENCEMENT as indicated in the Notice to Proceed, the Owner shall have the right to declare the Contractor in material breach of this Contract and terminate the Contract immediately without notice; and,
4. act as the A/E in the absence of a licensed design professional.

D. A/E's Rights and Responsibilities

In addition to any other rights and responsibilities contained in the Contract, the A/E shall:

1. represent the Owner during the construction process through final completion of the Project, and as requested during the warranty period. The A/E will act on behalf of the Owner only to the extent provided in these Contract Documents or otherwise agreed by the Owner;
2. make periodic visits to the site during construction to become familiar with the progress and quality of the Work and to determine if the Work is being performed accordance with the Contract Documents;
3. make recommendations to the Owner as to the acceptance or rejection of any portion of the Project and communicate the Owner's decision to the Contractor;
4. review and approve or reject shop drawings and samples submitted by the Contractor;
5. respond promptly to all requests for information or clarification from the Owner or the Contractor;
6. make the interpretation and decision on matters concerning performance under, and the requirements of, the Contract Documents, upon written request of either the Owner or Contractor, said interpretation or decision of the A/E shall be final, subject to the dispute resolution provisions of this Contract;
7. review periodic requests for payment, and approve or reject the request, in whole or in part; and,
8. prepare Change Orders or Change Directives as directed by the Owner.

ARTICLE 3 – CONSTRUCTION ADMINISTRATION

A. Shop Drawings and Samples

1. The Contractor shall review and approve Shop Drawings and Samples prior to their submission to the A/E. The Contractor's review shall be for compliance with the requirements of the Contract Documents and to ensure complete coordination of the Work.
2. The Contractor shall submit 3 sets of Shop Drawings as specified in the Contract Documents, or in the absence of a specification, submit enough copies for the Owner to retain two copies plus the number desired to be returned to the Contractor.
3. The A/E will review the shop drawings and samples with reasonable promptness but only for conformity with the design.
4. The Contractor shall submit samples as required by the Contract Documents. The final installed product shall match the approved sample.

B. Materials and Workmanship

1. The Contractor shall not use or allow the use of any asbestos-containing product.
2. The Contractor shall not use or allow the use of lead material in public water application. Lead-free solder, flux and pipe must be used in all public drinking water and wastewater applications. Lead-free solder and flux is defined as containing less than 0.2% lead while valves, pipes and appurtenances must contain less than 8.0% lead.
3. The Contractor warrants that unless otherwise specified or permitted by the Contract Documents, all materials shall be new, in first class condition, and installed using workmanship of the highest quality in accordance with the Contract Documents.

C. Inspection and Testing of Materials

1. The Contractor shall have performed and documented all inspections and tests required by the Contract Documents, including those required by the City's building officials.
2. The Contractor shall leave uncovered all areas of Work that are called out in the Contract Documents to be left uncovered, or the A/E requests to be left uncovered prior to being inspected. The Contractor shall give adequate notice to the A/E of the time requested for an inspection of these areas.

D. Substitutions

1. Wherever the Contract Documents specify a particular product, article, appliance, equipment, or material and it is designated by manufacturer and model number, it is the intent to designate a level of quality, finish, appearance, function, or other factor that was desirable to have incorporated into the design. Equivalent products of alternate manufacturers may be used, but must meet or exceed the specification for the original product and must be approved in advance by the A/E.

2. The Contractor shall not substitute any product, article, appliance, equipment, or material that is specified without the prior written approval from the A/E, which shall be granted only with the concurrence of the Owner.

E. Changes in the Work

1. Only the Owner may authorize changes in the Work. Such changes shall be made by issuing either a Change Order or a Construction Change Directive, and the Contractor shall execute the changed Work promptly.
2. The Contractor shall provide supporting information as requested by the A/E or the Owner to document the cost of any changed Work.
3. The Contractor shall prepare its cost proposal including labor and material cost breakdown with overhead and profit added as follows:
   a. For the Contractor or subcontractor on Work performed by its own forces:

Overhead (%)	Profit (%)	Commission (%)
10	7	0

   b. For the Contractor or subcontractor on Work performed by its subcontractors:

Overhead (%)	Profit (%)	Commission (%)
10	0	3

   c. To a first tier subcontractor on Work performed by its subcontractors:

Overhead (%)	Profit (%)	Commission (%)
10	0	3

   d. No more than three levels of overhead, profit, and commission shall be allowed regardless of the number of subcontractor tiers ("commission" is defined as profit on Work performed by others). The Contractor or subcontractor shall not be allowed overhead or commission on the overhead, profit, and/or commission received by its subcontractors. Changes to the Work that decrease the Contract Sum, i.e., deleted Work, shall include Overhead, Profit, and Commission.
4. In the absence of a total agreement concerning the item(s) for a Change Order, a Construction Change Directive shall be issued and the Contractor shall proceed diligently with performance of the Work required.

F. Receiving and Storing Materials and Equipment

1. The Contractor shall have an authorized person or persons to receive all items and shall properly unload, check for completeness of shipments, and in-transit damage.
2. The Contractor shall properly handle and store materials, supplies, equipment etc. in accordance with the Delivery Order or manufacturer's printed instructions of each product.

G. Reports

1. The Contractor shall prepare Daily Progress Reports on a form provided by the Owner. Reports shall be submitted to the Owner on a weekly basis.

H. Time for Completion

1. Requests for time extensions shall be made promptly. Delays of the Work due to circumstances beyond the control of the Contractor shall be adequately documented and submitted to the Owner with any request for an extension of the time for the completion.
2. The time allowed for Substantial Completion includes five (5) calendar days per calendar month for delays due to inclement weather. Delays due to weather beyond the five days may be requested as a time extension to the time for completion. The Contractor shall submit job site weather data supporting the claim for an extension of time.
3. Should completion of the Work extend past the original or amended Contract Date of Substantial Completion, the Owner will retain as liquidated damages, and not as a penalty, the amount listed on Page 1 and reduce the Contractor's final payment by that amount.

I. Guarantees and Warranties

1. The Contractor shall remedy and make good all defects in material and workmanship at no additional cost to the Owner and pay for any damage to other Work or property resulting from such defects for a period of one year from the Date of Substantial Completion, excepting damage that is caused by misuse or abuse by the Owner. All warranties shall be assigned to the Owner at no cost to the Owner and without the approval of the Contractor.
2. Where guarantees and/or warranties are required in the technical sections of the specifications, or as noted on the drawings, exceeding the one-year guarantee period, the extended warranty period will govern.

J. Use of the Site
1. The Contractor shall confine its operations to areas permitted by laws and ordinances, and as defined in the Contract Documents. The site must be maintained in a reasonably clean condition, free of trash and debris. The Contractor shall, on a regular basis or as specifically requested by the Owner, remove from the site all trash, debris, tools and equipment no longer needed for the Project.
2. The Contractor shall provide access to the site where the Project is being completed for representatives of the Owner, the Owner, the A/E and for all authorities having jurisdiction over the Project.

K. Taxes
1. The Contractor shall include in its Bid, and pay for, all taxes in effect or scheduled to go into effect at the time of bidding.
2. The Contractor's attention is directed to Title 12, Chapter 8, of the SC Code of Laws, as amended, concerning withholding of tax for non-residents, employees, contractors and subcontractors.

ARTICLE 4- PAYMENTS

A. The Owner shall make payments no more often than monthly to the Contractor for acceptable Work, as scheduled on page 1 and in accordance with Title 29, Chapter 6 of the SC Code of Laws, as amended.

B. The Contractor shall make payments to subcontractors and suppliers for acceptable Work performed and materials furnished in accordance with Title 29, Chapter 6 of the SC Code of Laws, as amended.

C. Accompanying each Application for Payment, the Contractor shall submit to the A/E a Schedule of Values allocating all the various portions of the Project, and a Construction Schedule, to be used by the A/E as a basis for reviewing the Application for Payment. The Owner shall make progress payments to the Contractor for acceptable Work completed based on the approved Schedule of Values and the A/Es' evaluation of the Contractor's Application for Payment. The Owner shall retain ten (10) percent of the value of the Contractor's last payment until the Final Application for Payment is paid.

D. The Contractor's Final Application for Payment may be submitted when the following have occurred:
1. The Contractor has fully completed the Project which is the subject of this Contract, including the acceptable completion of all punch list items; and,
2. The Contractor furnishes a Consent of Surety to Final Payment (for bonded projects) and Releases of Lien from subcontractors and suppliers; and,
3. The Contractor has furnished to the satisfaction of the A/E and the Owner all operating and maintenance manuals, product information, supplier warranties and guarantees and all other project completion documents; and,
4. The Contractor has completed all training and other startup/turnover support activities with the Owner's staff.

E. If the Project is completed to the satisfaction of the A/E, the A/E shall certify the Final Application for Payment and the Owner shall make final payment to the Contractor.

ARTICLE 5 – CLAIMS

A. Each party may assert a Claim requesting an adjustment of the Contract Sum, a change in the Contract Time for completion, or other relief with respect to the terms of the Contract.

B. Claims under this Contract shall be submitted by written notice that a Claim is being asserted. The responsibility to substantiate a Claim rests with the party making the Claim.

C. Claims arising prior to the date the final payment is due must be initiated within twenty-one (21) days after occurrence of the event giving rise to such Claim or within twenty-one (21) days after the claimant first recognizes the condition giving rise to the Claim, whichever is later. By failing to give written notice of a Claim within the time required by this paragraph, a party expressly waives its Claim.

D. Pending a resolution of the Claim, including any dispute resolution under this Contract, the Contractor shall proceed to perform as required by the Contract and the Owner shall continue to make payments in accordance with this Contract.

ARTICLE 6 – DISPUTE RESOLUTION

A. The parties agree to attempt in good faith to resolve their disputes arising from a Claim or controversy arising out of or relating to the Contract. To the extent that the parties are unable to reach a resolution, the parties agree that any suit, action or proceeding arising out of or relating to the Contract shall be instituted and maintained only in a state or federal court located in Charleston County. The Contractor agrees that any act by the Owner regarding the Contract is not a waiver of either the State's sovereign immunity or the State's immunity under the Eleventh Amendment of the United States Constitution. As used in this paragraph, the phrase "the State" includes any governmental entity transacting business with the Contractor pursuant to the Contract (including the Owner).

ARTICLE 7 - SUSPENSION OR TERMINATION OF THE CONTRACT

A. Owner's Right of Termination

1. The Owner may, at any time, terminate the Contract, in whole or in part, with or without cause for the Owner's convenience, upon thirty (30) days written notice to the Contractor. If Owner terminates the Contract for convenience, the Contractor shall be paid for acceptable Work completed through the date of termination.
2. The Owner may, upon written consent of the Contractor, reinstate the terminated portion of this Contract in whole or in part if it is determined by the Owner, in its sole discretion, that it is necessary or advantageous to the Owner. Compensation shall be equitably negotiated by agreement between the Owner and Contractor.

B. Contractor's Right of Termination

1. The Contractor may terminate the Contract if the Work is stopped for a period of 30 consecutive days through no act or fault of the Contractor or a Subcontractor, or their agents or employees or any other persons or entities performing portions of the Work under direct or indirect contract with the Contractor, for any of the following reasons:
   a. Issuance of an order of a court or other public authority having jurisdiction that requires all Work to be stopped; or
   b. An act of government, such as a declaration of national emergency that requires all Work to be stopped.
2. The Contractor may terminate its performance under this Contract if the Owner fails to make payments of undisputed amounts to the Contractor as required by the terms of this Contract. Prior to the termination for nonpayment, the Contractor shall give written notice to the Owner, and shall allow the Owner no fewer than sixty (60) calendar days to make payment, otherwise the termination may take effect without further notice by the Contractor.
3. If the Contractor terminates the Contract for one of the reasons stated above, the Contractor will be compensated for Work completed and accepted and materials purchased and stored in accordance with the Contract Documents through the date of termination.

C. Owner's Right of Suspension

1. The Owner may, at any time, suspend this Contract, in whole or in part, with or without cause, for such period of time as determined by the Owner.
2. The Contract Sum and Contract Time will be adjusted for increases in cost to the Contractor due to the delay or interruption of the Work, except that no increase will be granted for delays or interruptions that are, or would have been, the responsibility of the Contractor or subject to an equitable adjustment covered under other provisions of the Contract.

ARTICLE 8 – PROTECTION OF PERSONS AND PROPERTY

A. The Contractor is responsible for job-site safety and the protection of persons and property within the Work site. The Contractor shall comply with all applicable laws, rules and regulations regarding safety.

B. If during the course of executing the Work, the Contractor encounters material believed to be hazardous or of archeological significance, the Contractor shall immediately stop Work in the affected area and report the conditions to the Owner and the A/E in writing. Except by written agreement of the Owner and Contractor, the Contractor shall not resume Work until the material has been rendered harmless, removed or protected.

C. As to hazardous materials, this Article shall apply only to hazardous, toxic or radioactive materials or substances subject to the regulations of agencies having jurisdiction such as, but not limited to, the S.C. Department of Health and Environmental Control (SCDHEC), the U.S. Environmental Protection Agency (USEPA) and the U.S. Nuclear Regulatory Commission (USNRC).

D. For the purposes of this Contract, the term "rendered harmless" shall be interpreted to mean that measured levels of verified hazardous, toxic or radioactive materials or substances are less than the applicable standards established by authorities having jurisdiction. In no event, shall the Owner have any responsibility for any substance or material that is brought to the Project site by the Contractor, any Subcontractor, any material supplier, or any entity for whom any of them is responsible, unless such materials or substances were expressly required by the Contract Documents. The Contractor agrees not to use any fill or other materials to be incorporated into the Work that are hazardous, toxic, or radioactive, or made up of any items that are hazardous, toxic, or radioactive.

ARTICLE 9 – INDEMNITY

A. The Contractor shall indemnify and save harmless the Owner and the Owner's officers, agents, and employees, from and against all losses and claims, demands, payments, suits, actions, recoveries, and judgments of every nature and description brought or recovered against them by reason of any act, omission, or default of the Contractor, its agents, or employees in the execution of this Contract. When the Owner submits notice, Contractor shall promptly defend any aforementioned action at no cost to the Owner. This obligation shall survive the suspension or termination of this Contract. The limits of insurance coverage required herein shall not serve to limit this indemnity obligation. The recovery of costs and fees shall extend to those incurred in the enforcement of this indemnity.

ARTICLE 10 – INSURANCE AND BONDS

A. The Contractor shall purchase and maintain insurance to protect against claims that may arise out of the Contractor's operations under the Work of this Contract. The limits shall be for not less than the limits set forth in this Article, shall be written on an occurrence basis and shall be in force for the duration of the Contract.

B. The Contractor's Liability Insurance shall include all major divisions of coverage and is to be based on a Commercial basis including the following:
   1. Premises – Operations.
   2. Independent Contractor's Protective.
   3. Products and Completed Operations.
   4. Personal and Advertising Injury.
   5. Contractual, including specified provisions for Contractor's obligations.
   6. Broad Form Property Damage, including Completed Operations.
   7. Owned, Non-Owned and Hired Vehicles.
   8. Errors and Omissions.

C. The Insurance required by this Article shall be written for not less than the following limits or greater if required by law or other provisions in the Contract:
   1. Commercial General Liability:

a. General Aggregate (per project)	$ 2,000,000
b. Products/Completed Operations	$ 1,000,000
c. Personal and Advertising Injury	$ 1,000,000

d. Each Occurrence	$ 1,000,000
e. Fire Damage	$ 50,000
f. Medical Expense (any one person)	$ 5,000

2. Business Auto Liability (including all owned, non-owned, and hired vehicles):

a. Combined Single Limit	$ 1,000,000
-OR-	
b. Bodily Injury & Property Damage (each)	$ 1,000,000

3. Workers Compensation

a. State	Statutory
b. Employer's Liability	$ 100,000 Per Accident
	$ 500,000 Disease, Policy Limit
	$100,000 Disease, Each Employee

D. The aggregate Limits of the Contractor's Insurance shall apply, in total for this Contract. This shall be indicated on the Certificate of Insurance as "Per Project", or in an attached policy amendment.

E. The Owner shall be listed as the certificate holder of the Contractor's Liability Insurance.

F. Certificates of Insurance shall be in the form of the latest edition of the ACORD 25 and shall be filed with the Owner prior to commencement of the Work. In addition to Certificates of Insurance, the Contractor shall supply a written endorsement to the Contractor's general liability insurance policy that names the Owner as an additional insured. The endorsement shall provide that the Contractor's liability insurance policy shall be primary, and that any liability insurance of the Owner shall be secondary and noncontributory. These Certificates shall contain a provision that coverages afforded under the policies will not be cancelled unless at least thirty (30) days prior written notice has been given to the Owner.

G. In no event shall any failure of the Owner to receive certified copies or certificates of policies required under this Article or to demand receipt of such certified copies or certificates prior to the Contractor's commencing the Work be construed as a waiver by the Owner of the Contractor's obligations to obtain insurance pursuant to this Article. The obligation to procure and maintain any insurance required by this Article is a separate responsibility of the Contractor and independent of the duty to furnish a certified copy or certificate of such insurance policies. Cancellation of insurance shall be grounds for the immediate termination of the Contract.

H. Bonds

The Contractor shall deliver to the Owner properly executed Performance and Payment Bonds. If the Contractor fails to provide the Owner with a properly executed Bond as required herein, Contractor shall be in material breach of its responsibilities under the Contract.

1. Bonds shall each be in the amount of 100% of the amount of the Contract.
2. The Surety providing the Bonds shall have, at a minimum, a "Best Rating" of "A" as stated in the most current publication of "Best's Key Rating Guide, Property–Casualty". In addition, the Surety shall have a minimum "Best Financial Strength Category " of "Class V" and in no case less than five (5) times the Contract amount. The Bonds shall:
   a. be issued by a surety company licensed to do business in South Carolina; and,
   b. be accompanied by a current power of attorney and certified by the attorney-in-fact who executes the bond on the behalf of the surety company; and,
   c. remain in effect for a period not less than one (1) year following the date of Substantial Completion or the time required to resolve any items of incomplete Work and the payment of any disputed amounts, whichever time period is longer; and,
   d. display the Surety's' Bond Number.

I. Property Insurance

The Contractor shall purchase and maintain Builder's Risk insurance on the Project in the amount of the Contract Sum and all subsequent modifications on a replacement cost basis. The Contractor shall be responsible for any deductibles. Such insurance shall be maintained until final payment has been made.

ARTICLE 11 – CORRECTION OF WORK

A. The Contractor shall promptly, and with due diligence, correct Work rejected by the A/E or the Owner for failure to conform to the requirements of the Contract, whether such defective Work is observed before or after Final Completion. The Contractor shall pay for correcting the deficient Work including additional testing and inspections and any compensation for A/E services and expenses involved.

B. If the Contractor fails to carry out the Work in accordance with the Contract Documents, and fails within a seven (7) day period after receipt of notice from the Owner to commence and continue correction of such default or neglect with diligence and promptness, the Owner may, without prejudice to other remedies it may have, proceed to correct such deficiencies. In such case, an appropriate Construction Change Directive shall be issued deducting from payments to the Contractor the reasonable cost of correcting such deficiencies, including the Owner's expenses and compensation to the A/E, if necessary.

C. The Contractor and the Surety (if the Contract is bonded) remain liable for any excess cost or damages resulting from actions set forth in this Article.

ARTICLE 12 – CONSTRUCTION BY OWNER

A. The Owner reserves the right to do Work with its own forces or award separate contracts for Work on the same project.

B. The Contractor agrees to allow access to the site by the Owner's workforce or separate contractor(s), and agrees to assist in coordinating the progress of the Work with the Owner.

C. The Owner shall have the responsibility to coordinate the activities of the various contractors working at the project location.

ARTICLE 13 – SUBCONTRACTORS

If the Contractor engages subcontractors to provide Work on the Contract, then the Contractor shall include, or cause to be included, in the agreement with those entities, all provisions contained in this Contract. Subcontractors and sub-subcontractors shall be bound by the same provisions as the Contractor and shall preserve and protect the rights of the Owner.

ARTICLE 14 – COMPLETION AND CLOSEOUT

A. The Contractor shall have completed the unfinished and defective Work listed in the "punch list" and notify the A/E of its completion. The A/E will schedule a Final Inspection and require the Contractor to demonstrate that all equipment and systems operate as designed. The Owner may elect to have other persons, firms or agencies participate in the inspections.

B. Failure of the Contractor to achieve completion within the allowed time shall entitle the Owner to consider the Contractor in breach of the Contract.

C. If more than one Final Inspection is required, the Contractor shall reimburse the Owner for all costs associated with the re-inspection, if any.

D. Final Payment shall not be due, nor shall retained funds be released, until the Contractor complies with the requirements of Article 4.

ARTICLE 15 – GOVERNING LAW

This Contract is entered into and shall be construed and governed in accordance with the laws of the State of South Carolina. Contractor and City shall: (1) submit to the jurisdiction of the state and federal courts located in Charleston County, South Carolina; (2) waive any and all objections to jurisdiction and venue; (3) and not raise forum non conveniens as an objection to the location of any litigation.

ARTICLE 16 - MISCELLANEOUS

A. The Contractor and Owner each bind themselves, their directors, officers, successors, executors, administrators, assigns and legal representatives to all provisions of the Contract. Neither party shall assign, sublet or transfer their interest in this Contract.

B. This Contract represents the entire and integrated agreement between the Owner and the Contractor. It supersedes any and all prior and contemporaneous communications, representations and agreements, whether written or oral relating to the subject matter of this Contract.

C. Nothing in this Contract shall be construed to give any rights, contractual relationship or benefit to a third party against either the Owner or the Contractor.

D. Nothing in this Contract shall prevent the Contractor from employing any independent consultant, associate, or sub-contractor to assist in the performance of the Work.

E. Unless otherwise included in the Contract, nothing shall require the Contractor to discover, handle, remove, or dispose of any hazardous or toxic materials in any form at the project site.

SALES PROPOSAL

KOMPAN, INC. * 605 W Howard Lane Ste 101, Austin, TX 78753 * Tel 1-800-426-9788 * Fax 1-866-943-6254 * www.kompan.com

OMNIA® PARTNERS

Date	08/12/20
Expiration Date	
Proposal No.	SP75841
Project	St Julian Devine Community Ctr
Ship to State/Zip	SC 29403
Customer Service Representative	Elizabeth Lansing
Sales Representative	Lillie Veith
Payment Terms	DEP50%&N30

Site Location: C018745
St Julian Devine Community Cnt
Option 2
Rodney Porter
1 Cooper St
Charleston, SC 29403
United States

Invoice-to: C018745
City of Charleston
Main Acct SC for Dept of Parks
823 Meeting Street
Charleston, SC 29403
United States
Rodney Porter

Ship-to:
St Julian Devine Community Cnt
Option 2
1 Cooper St
Charleston, SC 29403
United States
Rodney Porter

Qty.	Item No.	Description	Unit Price	Retail Price	Disc. %	Net Price
		Omnia Partners Contract #2017001135				
1	BLX410102-3717	BLOQX 1, Lime GreenIG90	8,360.00	8,360.00	25.00	6,270.00
1	GXY960010-3717	SUPERNOVA - NIGHT SKY BLUE, IG90	7,930.00	7,930.00	25.00	5,947.50
1	ELE500014-3717	TALUS,IG	50,010.00	50,010.00	27.00	36,507.30
1	LE423600-3418F	BENCH,YELLOW	350.00	350.00	100.00	
1	KSW922-CUSTOM	KSW922 CUSTOM VARIANT 20084805 1 Bay,Grey posts, Galv Crossbeam, 1 Basket	3,180.00	3,180.00	25.00	2,385.00
1	M21102-3417P	AGE APPROPRIATE SIGN, IG 5-12 Years, IG 60 cm	420.00	420.00	25.00	315.00
1	FRT-KOMPAN INC	Freight from KOMPAN Inc	4,235.60	4,235.60		4,235.60
1	CUSTOMINSTALL	Install of KOMPAN EX PW	15,376.00	15,376.00	5.00	14,607.20
2,927	TFG-NCSO-14-01	EWF&FF/CFH 14'/12""comp.	1.31	3,834.37	10.00	3,450.93
1	FRT-OTHER	Freight Other / 3rd Party	2,529.00	2,529.00		2,529.00
146	CUSTOMINSTALL	Install of EWF/FF by cy	18.46	2,695.16	5.00	2,560.40

Continued on page 2..... 78,807.93

		Continued from page 1				78,807.93
1	APS-ADA RAMP	ADA Full Ramp System	808.00	808.00		808.00
72	APS-BORDER12	12" border w/spike-black	32.00	2,304.00	10.00	2,073.60
1	FRT-OTHER	Freight - Borders/Ramp	395.00	395.00		395.00
1	CUSTOMINSTALL	Install of Borders & Ramp	1,107.69	1,107.69	5.00	1,052.31
1	CUSTOMINSTALL	Install of Ramp	153.85	153.85	5.00	146.16
Total						**83,283.00**

Comments:

Please read attached General Assumptions and Exclusion document for information on install/sitework.
Please allow 8-10 weeks for product delivery upon order placement.
Site will need to be 1% of grade.
Any additional site work/excavation will be an additional charge. Site must be accessible by trucks/bobcat.
Private utility locating by others. Price based on single mobilization to perform work.
Installation through subsurface rock, concrete, utilities not included. Excavation, drainage, not included.
Existing site structures and surfacing to be removed by customer.

Summary:

	Retail Price	Discount	Net Price
Subtotal - KOMPAN Products	70,250.00	18,825.20	51,424.80
Subtotal - Other Products	2,304.00	230.40	2,073.60
Subtotal - Surfacing	4,642.37	383.44	4,258.93
Subtotal - Installation & Other Services	19,332.70	966.63	18,366.07
Subtotal - Freight	7,159.60	0.00	7,159.60
Subtotal	**103,688.67**	**20,405.67**	**83,283.00**

Estimated Tax Rate	9%	(Applicable sales tax will be added unless a valid tax exemption certificate is provided. This amount is only an estimate of your tax liability.)	5,842.52
Total			**89,125.52**

Your acceptance of this proposal constitutes a valid order request and includes acceptance of terms and conditions contained within the Master Agreement, which is hereby acknowledged. Acceptance of this proposal by KOMPAN is acknowledged by issuance of an order confirmation by an authorized KOMPAN representative. Prices in this quotation are good for 60 days.
This proposal may be withdrawn if not accepted by 10/05/20.
KOMPAN Products are "Buy American" qualified, and compliant with the Buy American Act of 1933 and the "Buy American"provision of the ARRA of 2009.

KOMPAN Authorized Signature:

Accepted By (signature): _____

Accepted By (please print): _____

Date: _____

KOMPAN
Let's play

General Assumptions

- Pricing is based on all equipment being direct delivery to the project address identified in KOMPANs Sales Proposal (SP)
- Placement of order into fabrication is contingent with deposit being received by KOMPAN as agreed to during the pricing phase
- If cost proposal is to be considered as Tax-Exempt a current tax exemption form must be provided or on file at KOMPAN main office
- Customer shall provide a lay down area for deliveries of materials within proximity of final installation site. Site access must be clear and unobstructed with at least ten (10') foot wide access to allow delivery of materials. Any size restrictions contributing to additional handling or downsizing of deliver trucks shall be addressed as a change of conditions and will be invoiced as additional costs to the customer
- Installation site must be level to no more than one (1") inch in then (10') feet slope or change in elevation over the full length and width of the area
- Price assumes NO overhead obstructions within thirteen feet, six inches (13'-6") or lower and NO underground utilities or obstructions within the footprint
- Soils are to be suitable for the installation of all playground equipment and surfacing and compacted to 95% compaction prior to installation crews arriving on-site
- All underground utilities, boulders, rock ledge or other obstructions not visible without subsurface investigation shall be considered "unforeseen conditions", all costs shall be invoiced to the customer as a change order to the contract
- All spoils generated during the excavation of footings shall be disposed of on site at no cost to KOMPAN
- Customer to provide at no additional costs a 120 V (15 amp) power source and standard hose bib connection for water supply within one hundred (100') feet from work site
- Customer shall have removed all existing equipment or obstacles from playground area prior to the arrival of the installation crews
- Time is of the essence in the installation of all materials delivered to project site. KOMPAN shall have delivered all equipment and materials as scheduled to project site. If delays to the installation schedule accrue outside KOMPANs control equipment shall be delivered to project site as scheduled and equipment and materials invoiced at the time of delivery. Unless additional storage arrangements are made in writing between Customer and KOMPAN, additional costs may apply. Unloading of equipment and materials shall be performed by the installation crews at the time of installation. If site is not ready for installation by cause outside of KOMPAN, it will be the responsibility of the Customer to off load and store equipment and materials at the project site. KOMPAN shall not be held liable for offloading costs, storage fees or equipment damage
- If site requires installation of a drainage system within the proposed playground area, playground equipment footing shall be installed prior to the installation of the drainage system and playground footing locations shall take precedence over drainage system requirements
- Site layout and dimensions shall be based of KOMPANs 2D drawing or CAD drawings. Customer to provide site "benchmark" to be used for layout and final elevation calculations
- Unless otherwise noted on KOMPAN's SP proposal assumes that there are no Prevailing Wages requirement on the project
- Any additional costs which maybe incurred during installation shall be negotiated between Customer and KOMPAN in writing prior to the start of additional work. If written approval is not received during the time the installation crews are on-site, additional mobilization costs will apply

Exclusions (Unless Explicitly Stated in KOMPAN Sales Proposal)

- Stamped engineered drawings or costs to secure permits are not included. If required these costs will be added as a change order payable to Kompan
- Demolition and off-site disposal of any existing equipment or site amenities
- Any sitework, including but not limited to grading, excavation outside playground equipment footing and soils compaction and testing
- Concrete work outside of play equipment footing requirements
- Relocation of any existing equipment
- Any required drainage system for playground area
- Third party testing of materials and playground installation
- Site landscaping or trimming of vegetation encroaching within the play equipment and safety zones
- Play area surfacing and base materials if not noted in KOMPAN proposal
- Installation of Poured in Place surfacing does not include the use of aliphatic binder, solid or custom colors
- Site security during Poured in Place surfacing cure time and any vandalism which may accrue during surfacing cure time
- Borders for play area surfacing containment
- Any required retaining walls for proposed play area
- Site storage for equipment
- Site safety fencing beyond standard four (4') foot orange construction fencing
- Utilities site location services and/or relocation of any underground utilities
- On site dumpster for disposal of shipping containers and general construction debris

CPR COMMITTEE and/or COUNCIL AGENDA

TO: John J. Tecklenburg, Mayor

FROM: Rodney Porter / Andrew Jones **DEPT.** Parks – Capital Projects

SUBJECT: 2020 PARD GRANT ACCEPTANCE-VIVIAN ANDERSON MOULTRIE PLAYGROUND

REQUEST: Approval for the 2020 Park and Recreation Development (PARD) Grant Acceptance to furnish new playground structure, swing set, and safety surfacing for the Vivian Anderson Moultrie Playground. Requested funding of $32,430.60 with a 20% City Match of $8,107.65.

COMMITTEE OF COUNCIL: Ways & Means **DATE:** September 8, 2020

COORDINATION: This request has been coordinated with: *(attach all recommendations/reviews)*

	Yes	N/A	Signature of/Individual Contacted	Attachment
CPR Committee Chair	☐	☐	Amy Wharton	☐
Corporate Counsel	☐	☐	[illegible]	☐
Capital Projects Director	☑	☐	[illegible]	☐
Grant Manager	☑	☐	[illegible]	☐

FUNDING: Was funding previously approved? Yes ☒ No ☐ N/A ☐

If yes, provide the following: Dept/Div Parks-Capital Projects Acct # •

Balance in Account $8,107.65 Amount needed for this item $8,107.65

Project Number CP2008

NEED: Identify any critical time constraint(s).

CFO's Signature: Amy Wharton

FISCAL IMPACT: City Match $8,107.65 from 523000-52435 Maintenance, Playground Equipment

Mayor's Signature: [signature]
John J. Tecklenburg, Mayor

ORIGINATING OFFICE PLEASE NOTE: A FULLY STAFFED/APPROVED (except Mayor's Signature) PACKAGE IS DUE IN THE CLERK OF COUNCIL'S OFFICE NO LATER THAN 10:00 A.M THE DAY OF THE CLERK'S AGENDA MEETING.

South Carolina
Just right.

South Carolina Department of
Parks, Recreation & Tourism

Henry McMaster
Governor

Duane N. Parrish
Director

July 14, 2020

Mr. Rodney H Porter
City of Charleston
823 Meeting ST
Charleston, SC 29403

Dear Mr. Porter:

The Department of Parks, Recreation, and Tourism wishes to extend congratulations on the approval of the following project(s) under the Park and Recreation Development Fund:

2021002 Vivian Anderson Moultrie Park - New Playground

Upon return of the signed agreement you may proceed with your project. Please reference the agreement document for dates when construction and bills are to be complete.

Enclosed you will find copies of the project agreement(s). Please review the document carefully, sign and return one copy to this office. Please feel free to call should you have any questions.

Sincerely

Alesha Cushman
Grants Coordinator

RECEIVED
JUL 22 2020
CITY OF CHARLESTON

STATE OF SOUTH CAROLINA
DEPARTMENT OF PARKS, RECREATION AND TOURISM
PARK AND RECREATION DEVELOPMENT FUND
PROJECT AGREEMENT

PROJECT NUMBER: 2021002

PROJECT NAME: Vivian Anderson Moultrie Park - New Playground

PROJECT SPONSOR: City of Charleston

PERIOD COVERED BY THIS AGREEMENT: July 14, 2020 to July 14, 2040

PROJECT SCOPE (Describe in detail in the project file, but is summarized as follows):

Purchase and install new playground equipment, to include safety surface and site work.

BILLING PERIOD

The project sponsor must submit billing for at least the amount indicated within the designated period(s):

$40,538.25 By Jul 14, 2023

PROJECT COST

State Share	$32,430.60
Local Share	$8,107.65
Total Cost	$40,538.25

The State of South Carolina, represented by the Department of Parks, Recreation, and Tourism, (hereinafter referred to as PRT), and The Project Sponsor, mutually agree to perform this agreement in accordance with the guidelines established by PRT, and with the terms, promises, maps, and assurances attached hereto and made part of this agreement.

The State of South Carolina promises to obligate the amount of money referred to herein. The Project sponsor promises to execute the project above in accordance with the terms of this agreement.

The following special project terms and conditions were added to this agreement before it was signed by the parties involved:

1) The Project Sponsor agrees to operate the above described facilities in a nondiscriminatory manner with regards to race, color, creed, national origin, or handicap such that the general public is not prohibited except possibly during night hours when it might be deemed unsafe for use.

2) The Project Sponsor agrees to operate and maintain the above described facilities in a safe and useable manner for their intended purposes throughout the agreement period.

3) The Project Sponsor agrees to erect and maintain throughout the agreement period, a sign which credits the State and The Parks and Recreation Development Fund for assisting in the project.

4) In the event that any portion of this agreement applied to leased property, the Project Sponsor must provide PRT with an adequate lease to the subject property prior to the first billing request. And, if the lease is terminated for any reason prior to the expiration date of this agreement, the Project Sponsor agrees to relocate any improvements developed under this agreement to another site which would be open for public use. Any and all expenses for real estate, relocation and/or other expenses will be borne by the project sponsor.

The State of South Carolina

By _____

Department of Parks,
Recreation and Tourism

Date: 14-Jul-2020

Project Sponsor

By _____

Title: _____

Date: _____

21.)

CPR COMMITTEE and/or COUNCIL AGENDA

TO: John J. Tecklenburg, Mayor

FROM: Edmund Most **DEPT.** Parks – Capital Projects

SUBJECT: ST. JULIAN DEVINE SMOKE STACK PRESERVATION AND PARTIAL REMOVAL ENGINEERING CONTRACT

REQUEST: Approval of a Professional Services Contract with Bennett Preservation Engineering, PC, in the amount of $89,355.00 for engineering services related to the partial removal and preservation of the St. Julian Devine Community Center Smoke Stacks.

COMMITTEE OF COUNCIL: Ways & Means **DATE:** September 8, 2020

COORDINATION: This request has been coordinated with: *(attach all recommendations/reviews)*

	Yes	N/A	Signature of Individual Contacted	Attachment
CPR Committee Chair	☐	☐		☐
Corporate Counsel	☐	☐		☐
Capital Projects Director	☑	☐		☐
MBE Manager	☐	☐		☐

FUNDING: Was funding previously approved? Yes ☒ No ☐ N/A ☐

If yes, provide the following: Dept/Div Parks-Capital Projects Acct # 051588-58238

Balance in Account $89,355.00 Amount needed for this item $89,355.00

Project Number CP1620

NEED: Identify any critical time constraint(s).

CFO's Signature: Amy Wharton

FISCAL IMPACT: **Approval of this Engineering Contract will obligate $89,355.00 of the project budget $3,110,000.00. Funding sources for this project are: 2015 General Fund Reserves ($250,000.00), 2018 General Fund Reserves ($400,000.00), Cooper River Bridge TIF ($2,250,000.00), and Charleston Parks Conservancy Contribution ($210,000.00).**

Mayor's Signature:

John J. Tecklenburg, Mayor

ORIGINATING OFFICE PLEASE NOTE: A FULLY STAFFED/APPROVED (except Mayor's Signature) PACKAGE IS DUE IN THE CLERK OF COUNCIL'S OFFICE NO LATER THAN 10:00 A.M THE DAY OF THE CLERK'S AGENDA MEETING.

Date:	**Tuesday, September 1, 2020**
To:	**Edmund Most** Capital Project, City of Charleston
From:	**Taylor Frost**
cc:	**Craig M. Bennett, Jr., PE** **John Bennett, SE, PE** Bennett Preservation Engineering PC
Subject:	**Partial Removal and Preservation of the St. Julian Smoke Stacks**
Number of sheets:	8
My filename:	t:\jobs\active\2018\18-022 st julian devine chimneys\correspondence\proposals and contracts\additional services - disassembly\2020-09-01 st. julian chimneys disassembly revised proposal.docx

Mr. Most:

We appreciate your asking Bennett Preservation Engineering to present a proposal for structural engineering services for the partial removal and preservation of the St. Julian Devine Chimneys. In 2019, we were contracted to design repairs to the two chimneys as they currently stand, but after discussion with the City and significant design effort, BPE began to reconsider the safety of keeping the chimneys at their current height. We came to understand that the chimneys, as they currently stand, pose a significant threat to 31 buildings in the surrounding neighborhood during any high wind event. We propose, with the work described here, to immediately disassemble both chimneys down to a determined safe point, then preserve the remainder of the stacks with tie-downs, tie-backs to the inner masonry liner, and caps.

After many discussions, the scope of our original project changed to what is outlined in this proposal. We will void the remaining amount of our current Purchase Order with the City and move forward

under this contract for this new scope of work.

Below is a breakdown of our scope of work:

Scope of Work

Part 1

- We will create simple disassembly drawings for permitting that include the partial disassembly of both chimneys.

Part 2

- We will work with the City on a design that will be beneficial and safe for public interaction.
- We will produce Contract Documents (CDs), including both drawings and specifications for the required scope of work. The drawings will include plans and elevations. Additionally, the specifications will include strict protection requirements for the surrounding buildings for the sub-contractors involved in the work.
- This project will be reviewed by the City's Chief Building Official for partial disassembly of the structures.
- We will do construction contract administration which includes holding a pre-construction conference, Owner, Engineer, Contractor (OEC) meetings on a weekly basis as needed, reviewing and responding to any RFIs, submittals, shop drawings, applications for payment, etc., and holding substantial completion and final punch list meetings.

We have made an estimate of our hours for this project and propose completing this scope of work for a fixed fee of $89,355.

The following table was used to develop the professional fee for this project. This does not commit Bennett Preservation Engineering to spending the exact number of hours associated with each task or each person listed. Bennett Preservation Engineering reserves the right to redistribute the hours within the tasks and between tasks. We realize that some tasks may take more hours and some tasks may take fewer hours.

Construction Documents

Professional Time	# Hours Principal Engineer	# Hours Engineer	# Hours Project Manager	# Hours Preservationist
Onsite and Surrounding Structure Investigation	4	4	8	8
Coordination with City	16	8	8	--
Comparison of Original Drawings with As-Built Conditions	4	8	--	16
Evaluation of Cost of Tie-Back Systems Alternatives	8	--	4	--
Structural Design of Tie Down System on Second Chimney	4	8	--	--
Structural Design of Expanded Stainless Steel Chimney Caps	2	4	--	--
Structural Design for Unreinforced Height	2	8	--	--
Structural Design for Banding for Increased Seismic Resistance	4	8	--	--
Construction Drawings for Initial Disassembly	8	8	4	24
Construction Drawings for Tie-Down, Tie-Back, Caps, Bands	8	16	16	40
Technical Specifications	8	2	20	--
Management	8	--	16	--
Total Professional Hours	76	74	76	88
Subtotal	$18,240	$11,840	$11,020	$11,000
Total Professional Fee			**$52,100**	

Construction Contract Administration

Professional Time	# Hours Principal Engineer	# Hours Engineer	# Hours Project Manager	# Hours Preservationist
Pre-Construction Meetings	4	2	4	--
Job Site Meetings	48	24	72	--
RFIs, Submittals, Shop Drawings, etc.	8	16	20	--
Substantial Completion Meeting	3	--	4	--
Final Punch List Meeting	2	--	3	--
Total Professional Hours	65	42	103	0
Subtotal	$15,600	$6,720	$14,935	$0
Total Professional Fee			**$37,255**	

It is assumed that any landscape or hardscape design will be done by the City separately.

With the approval of this proposal, Bennett Preservation Engineering is capable of starting this project in the next couple weeks. Should additional work be required beyond this scope of work, we are happy to provide an addendum to this proposal based on an agreed upon fixed fee or we can work hourly per our standard hourly rates.

Should you wish to discuss anything in the proposal, please do not hesitate to call our office. If this proposal is acceptable, we have attached a short form contract for the work for you to sign and return.

Sincerely,

Taylor Frost
Project Manager
Bennett Preservation Engineering PC

City of Charleston Contract for Professional Services

THIS CONTRACT, made this _____day of _____, 20_____ by and between

The Owner: City of Charleston
Department of Parks
823 Meeting Street
Charleston, SC 29403

and the A/E: Bennett Preservation Engineering
17 Lockwood Drive, Suite 500
Charleston, SC 29401

WHEREAS, the Owner requires the delivery of professional Structural Engineering Services ("Work"), as a part of the St. Julian Devine Smoke Stake Preservation Project ("Project") as outlined in Exhibit A, Memorandum for Partial Removal and Preservation of the St. Julian Smoke Stacks ("Service" or "Scope of Services"), dated September 1, 2020, prepared by Taylor Frost which is marked as EXHIBIT A and attached hereto as if fully written herein.

CP-1620 Partial Removal and Preservation of the St Julian Devine Smoke Stacks
(Project Number) *(Project Name)*

WHEREAS, the A/E, whose SC professional license is COA #13858, is prepared and qualified to provide such Services.

NOW THEREFORE, the Owner and A/E agree to all of the following:

THE SERVICES required herein are set forth in the attached EXHIBIT A, Scope of Services which shall be performed in accordance with the Terms and Conditions contained on pages 2 through 4 of this Contract. SERVICES shall be performed and PAYMENTS for acceptable work shall be made in accordance with the following:

This is a Not to Exceed Contract and payments shall be made within 30 days after A/E submits an invoice and the required geotechnical report to the City.

The **CONTRACT SUM** payable to the A/E shall be:
☒ Lump Sum of ..... $ 89,355.00.
☐ Actual costs based on attached A/E's Hourly Rate & Reimbursable Schedule, Not-to-Exceed ..... $ 0.00

REIMBURSABLES:
☐ Expenses shall be reimbursed at actual cost plus 10%, Not-to-Exceed..... $ 0.00
☒ Expenses included in Lump Sum.

IN WITNESS WHEREOF, THE PARTIES HERETO HAVE ENTERED INTO THIS CONTRACT ON THE DAY AND YEAR FIRST WRITTEN ABOVE.

OWNER: City of Charleston

BY: _____
John J. Tecklenburg, Mayor

A/E: Bennett Preservation Engineering

BY: _____
(Signature of A/E Representative)

_____
(Print or Type Name of A/E Representative)

ITS: _____

ATTACHMENTS
1. Exhibit A, Memorandum for Partial Removal and Preservation of the St. Julian Smoke Stacks, dated September 1, 2020, prepared by Taylor Frost

Terms and Conditions of the City of Charleston
Professional Services Contract

ARTICLE 1 - GENERAL

A. The A/E agrees to provide professional services to the Owner as required by the Scope of Services requested by the Owner as set forth in Exhibit A.

B. The A/E accepts the relationship of trust and confidence established between A/E and Owner by this Contract.

C. The A/E covenants with the Owner that he/she possess the required degree of learning, skills, and experience that is ordinarily possessed by similarly situated professionals, that he/she will utilize reasonable and ordinary care and diligence in the exercise of his/her skills to accomplish the Scope of Services, and that he/she will use good professional judgment in performing the Scope of Services.

D. The A/E agrees to cooperate with the Owner and any other contractor in furthering the interests of the Owner.

ARTICLE 2 – A/E'S RESPONSIBILITIES

A. The A/E shall designate one or more representatives to be assigned for the duration of the Project. These representatives shall be authorized to act on behalf of the A/E in all matters related to the A/E's performance(s) under this Contract. The A/E shall not replace a designated representative without notice to the owner and with good cause shown.

B. The A/E shall notify the Owner, in writing, of information necessary from the Owner for the project. A/E shall allow sufficient time for Owner to acquire and respond with such information.

C. The A/E shall provide all Scope of Services using persons, including the staff of A/E's Consultants and Additional Consultants, who possess the required degree of learning, skills, and experience that is ordinarily possessed by similarly situated professionals, that they will utilize reasonable and ordinary care and diligence in the exercise of their skills to accomplish the Scope of Services, and that they will use good professional judgment in performing the Scope of Services.

D. The A/E shall manage and coordinate the A/E's services, consult with the Owner, research applicable design criteria, attend all Project meetings, communicate with members of the Project team and report progress to the Owner.

E. The A/E shall have, at the time of execution and for the duration of this Contract, all professional and business insurance, licenses and permits required to provide the required Services in the City of Charleston and as required by this Contract.

F. The A/E shall be entitled to rely on the accuracy of information provided by the Owner. Notwithstanding the foregoing, A/E shall review all information provided by the Owner and shall give prompt and timely notice to the Owner of any apparent deficiencies or inconsistencies in the information furnished by the Owner.

G. The A/E shall be entitled to additional compensation if required to provide services beyond those Services set forth in Exhibit A. The A/E shall be compensated for these additional services as agreed by both parties.

ARTICLE 3 - OWNER'S RESPONSIBILITIES

A. The Owner shall provide all available programmatic and budgetary requirements for the Project.

B. The Owner shall designate one or more representatives with authority to act on the Owner's behalf in all matters related to the Owner's duties under this Contract.

C. The Owner shall provide the A/E with available information about the site and work area that is necessary for the A/E to perform the Services. The owner shall cooperate with the A/E in the identification and acquisition of any additional information required.

D. The Owner shall make timely decisions on all issues related to the Contract and shall promptly advise the A/E of any errors or deficiencies in the A/E's performance under this Contract.

ARTICLE 4 – ADDITIONAL CONSULTANTS

A. It is agreed that the attached Exhibit A shall have identified all professional and technical disciplines and their providers required for the performance of the A/E's Services, and that the fees for such personnel are incorporated into the Contract Sum set forth on page one (1) of this Contract.

B. Additional Consultants may be employed to perform portions of the Services under this Contract as required and approved by the Owner in advance. The A/E may apply a multiplier, not to exceed 1.1, to the approved fees of such Additional Consultants.

ARTICLE 5 – LIMITATIONS OF RESPONSIBILITY

A. The A/E shall not be responsible for the failure of any contractor, sub-contractor, vendor, or other project participant, not under contract to the A/E, to fulfill its contractual responsibilities to the Owner or to comply with Federal, State, or local laws, regulations, and codes.

B. The A/E shall indemnify and save harmless the Owner and the Owner's officers, agents and employees, from and against all losses and claims, demands, payments, suits, actions, recoveries, and judgments of every nature and description brought or recovered against them by reason of any act, omission, or default of the A/E, its agents, or employees or subcontractors in the performance of this Contract. When the Owner submits notice, A/E shall promptly defend any aforementioned action at no cost to the Owner. This obligation shall survive the suspension or termination of this Contract. The limits of insurance coverage required herein shall not serve to limit this indemnity obligation. The recovery of costs and fees shall extend to those incurred in the enforcement of this indemnity.

ARTICLE 6 – DOCUMENTS

A. At the completion of the project, the A/E shall provide to the Owner all contract documents, electronically, on a Computer Disk or thumb drive. Specifications shall be in Microsoft Word format and as-built drawings shall be in AutoCAD 2000 format.

B. All documents prepared or furnished by the A/E pursuant to this Contract are instruments of service and the A/E shall maintain an ownership and property interest therein.

C. Documents prepared or furnished by the A/E pursuant to this Contract may not be reused by the A/E on other projects or for other clients without the prior written permission of the Owner.

D. The A/E hereby grants to the Owner a non-exclusive license to reproduce or otherwise utilize A/E's documents for the purposes of constructing, operating, maintaining, repairing, using, renovating, expanding, modifying or otherwise enjoying the beneficial use of the Project at no additional cost to the Owner. The A/E shall incur no liability for the Owner's reproduction or reuse of the A/E's documents.

E. Consultants and Additional Consultants used by the A/E for the Services of this Contract shall be bound by the conditions of this Article.

ARTICLE 7 – PAYMENTS

A. The Owner shall make payments to the A/E for undisputed work, as scheduled on page 1 and in accordance with Title 29, Chapter 6 of the SC Code of Laws, as amended.

B. The A/E shall make payments to its Consultants and Additional consultants in accordance with Title 29, Chapter 6 of the SC Code of Laws, as amended.

C. If applicable, the A/E's request for payment under a NOT-TO-EXCEED contract shall be based on actual hours worked during the billing period, using the approved A/E's Hourly Rate and Reimbursables Schedule, not exceeding the scheduled amounts shown on Page 1 (one) of this Contract.

D. All requests for payment shall be submitted in the form and manner required by the Owner, and shall be accompanied by appropriate supporting documentation.

E. All requests for payment shall be submitted in the form and manner required by the Owner, and shall be accompanied by appropriate supporting documentation.

F. Payment under a Lump Sum contract shall be paid within thirty (30) days of receipt of the invoice. The invoice for the A/E's services shall be submitted to the City at the completion of the Scope of Services and after the City's acceptance of the work in its entirety.

ARTICLE 8 - DISPUTE RESOLUTION

The parties agree to attempt in good faith to resolve their disputes arising from a claim or controversy arising out of or relating to the contract. To the extent that the parties are unable to resolve a claim or controversy arising out of or relating to the Contract, the parties agree that any suit, action or proceeding arising out of or relating to the Contract shall be instituted and maintained only in a state or Federal court located in the County in which the Owner maintains its principle place of business, in the State of South Carolina. The A/E agrees that any act by the Owner regarding the Contract is not a waiver of either the State's sovereign immunity or the State's immunity under the Eleventh

Amendment of the United States Constitution. As used in this paragraph, the phrase "the State" includes any governmental entity transacting business with the A/E pursuant to the Contract.

ARTICLE 9 - SUSPENSION AND TERMINATION

A. The Owner may direct the A/E to suspend performance under this Contract at any time.

B. The A/E may suspend its performance under this Contract if the Owner fails to make payments of undisputed amounts to the A/E as required by the terms of this Contract. Prior to the suspension of performance, the A/E shall give written notice to the Owner, and shall allow the Owner no fewer than twenty one (21) calendar days to make payment, otherwise the suspension may take effect without further notice by the A/E.

C. If the performance of Services is suspended by either party for a period of more than thirty (30) days but less than one hundred eighty (180) days due to no fault of the A/E, the A/E's time schedules shall be equitably adjusted. If a project is interrupted for one hundred eighty (180) days or more due to no fault of the A/E, the A/E's compensation shall be equitably adjusted to provide for expenses incurred in resuming the A/E's services and the time schedules for the remaining services shall be equitably adjusted.

D. The Owner may terminate this Contract for the convenience of the Owner with not less than seven (7) days written notice to the A/E. The A/E shall be paid for all services acceptably performed and reimbursable expenses incurred, up to the date of termination, and project closure costs as authorized by the Owner.

E. If either party fails to substantially perform according to the terms of this Contract, the other party may terminate this Contract upon not less than seven (7) days written notice. The notice of termination shall set forth with specificity the grounds for termination and may, at the sole option of the terminating party, give the other party a stated period of time in which it may cure the alleged breach.

ARTICLE 10 – INSURANCE

A. The A/E shall maintain all forms of insurance required by law in the State of South Carolina. The A/E shall also maintain insurance coverage for comprehensive, general liability, automobile liability, and workers' compensation (by statutory authority). Minimum insurance coverage limits shall be as required by law or as shown in Chapter 6 of the *Manual for Planning and Execution of State Permanent Improvements Part II*, whichever is greater.

B. The A/E shall maintain Professional Liability Insurance for the duration of this Contract with a limit of $1,000,000 per claim and annual aggregate, or such other amount as the Owner may request. This policy shall remain in effect for a minimum of 12 months after the date of issuance of the final Certificate of Payment by the A/E.

ARTICLE 11 – MISCELLANEOUS PROVISIONS

A. The A/E and Owner each bind themselves, their partners, directors, officers, successors, executors, administrators, assigns and legal representatives in respect to all provisions of the Contract. Neither party shall assign, sublet or transfer their interest in this Contract without the written consent of the other party.

B. This Contract represents the entire and integrated agreement between the Owner and A/E. It supercedes any and all prior and contemporaneous communications, representations and agreements, whether written or oral relating to the subject matter of this Contract.

C. Nothing in this Contract shall be construed to give any rights, contractual relationship or benefit to a third party against either the Owner or the A/E.

D. Nothing in this Contract shall prevent the A/E from employing any independent consultant, associate, or sub-contractor to assist in the performance of the Services.

E. Unless otherwise included in the Contract, nothing shall require the A/E to discover, handle, remove, or dispose of any hazardous or toxic materials in any form at the project site.

F. Time and Expense Records of the A/E's personnel, consultants, and reimbursable expenses pertaining to the Services shall be kept on a generally recognized accounting basis, and shall be available to the Owner for audit at mutually agreeable times and places for a period no less than 3 years after the conclusion of this Contract.

ARTICLE 12 – ERRORS AND OMISSIONS

A. Owner shall notify the A/E whenever the Owner believes the A/E's Work contains errors or omissions, and the A/E shall agree to correct all errors and omissions without cost to the Owner.

B. The A/E agrees to pay the Owner for any costs the Owner is responsible for paying as a result of any A/E error or omission. Each error and omission shall constitute a separate offense.

22.)

CPR COMMITTEE and/or COUNCIL AGENDA

TO: John J. Tecklenburg, Mayor

FROM: Edmund Most **DEPT.** Parks – Capital Projects

SUBJECT: ST. JULIAN DEVINE COMMUNITY CENTER TWIN SMOKE STACKS CONSTRUCTION CONTRACT

REQUEST: Approval of a Construction Contract with Demolition Environmental Company, LLC (DECO) in the amount of $485,990.00 for the partial demolition, removal and preservation of the twin smoke stacks located at the St. Julian Devine Community Center.

With the approval of the project budget, Staff is authorized to award and/or amend contracts less than $40,000.00, to the extent contingency funds exist in the Council Approved Budget.

COMMITTEE OF COUNCIL: Ways & Means **DATE:** September 8, 2020

COORDINATION: This request has been coordinated with: *(attach all recommendations/reviews)*

	Yes	N/A	Signature of Individual Contacted	Attachment
CPR Committee Chair	☐	☐		☐
Corporate Counsel	☐	☐		☐
Capital Projects Director	☐	☐		☐
MBE Manager	☐	☐		☐

FUNDING: Was funding previously approved? Yes [X] No ☐ N/A ☐

If yes, provide the following: Dept/Div Parks-Capital Projects Acct # 051588-58240

Balance in Account $485,990.00 Amount needed for this item $485,990.00

Project Number CP1620

NEED: Identify any critical time constraint(s).

CFO's Signature: _____

FISCAL IMPACT: **Approval of this Construction Contract will obligate $485,990.00 of the project budget $3,110,000.00. Funding sources for this project are: 2015 General Fund Reserves ($250,000.00), 2018 General Fund Reserves ($400,000.00), Cooper River Bridge TIF ($2,250,000.00), and Charleston Parks Conservancy Contribution ($210,000.00).**

Mayor's Signature: _____

John J. Tecklenburg, Mayor

ORIGINATING OFFICE PLEASE NOTE: A FULLY STAFFED/APPROVED (except Mayor's Signature) PACKAGE IS DUE IN THE CLERK OF COUNCIL'S OFFICE NO LATER THAN 10:00 A.M THE DAY OF THE CLERK'S AGENDA MEETING.

Celebrating 17 Years of Service

DECO (Demolition Environmental Company, LLC)
DECO.US.COM
PO Box 61900
North Charleston, SC 29419
843-554-8408 Phone
843-554-8409 Fax

September 2, 2020

City of Charleston Department of Parks
823 Meeting Street Charleston, SC 29403
M:(843) 509-9410 | T:(843) 724-7148 | moste@charleston-sc.gov | www.charleston-sc.gov

City of Charleston

RE: Cooper St Chimney Selective Demolition

DECO proposes to furnish all labor, material, equipment, and supervision necessary to perform the scope of work associated with the complete Selective demolition and removal of structure according to site visit for see break down below:

- ***Option 1*** Demolition of Stacks Down to a height of 60ft $415,990.00
- ***Option 2*** Demolish stacks down to grade and backfill holes $534,508.00

Potential Contingency's. Must have written approval from Owner rep prior to commencing this portion of work

- Contingency costs for potential repairs from damages $35,000.00
  - Some items that may be impacted are: Sidewalks, brick landscape, lower brick walls, adjacent trees, and curbing.
- Contingency for erosion control of needed $5,000.00
- Contingency for placement of new Stack covers engineered by others $30,000.00

SCOPE OF WORK:

INCLUDES:

1) Installation of Scaffolding system for full access to smokestacks
2) All permits City and State as required
3) Material Hoist needed for safe debris removal
4) Fencing and securing site for work
5) Street Closure and Signage to stop pedestrians for being put in harms way
6) Safety personal at ground level to control potential site problems
7) Barricades along Cooper St to prevent debris from entering roadway
8) Protection of existing backflow and mechanical items adjacent to city building
9) Protection of adjacent City building windows from loose falling debris
10) Hauling and disposal of all debris according to State and EPA guidelines.
11) Clean up of all demolition debris.
12) Dust control as required.
13) safety measures and signage.

EXCLUDES:

1) Any additional environmental concerns that may be present or arise
2) SWPP if required by City

ASSUMPTIONS:

1) All work will be performed under one mobilization
2) All work to be performed during normal working hours Monday – Saturday
3) Cooper St will be closed from East Bay to Drake St for approximately 8 weeks worse case
4) During the top removal portion there could be a potential to close Half of all of Drake St for a short duration
5) Project will require adjacent sidewalks to the site on Drake and Cooper to be closed for the duration of the work
6) DECO will make every attempt to save the existing stack and prevent them from failing further. DECO gives no guarantee that the remaining 60ft of stacks will remain in place after removal is complete
7) It assumed DECO will have unencumbered access to Cooper St for the duration

INSURANCE:

DECO maintains a standard 2-million-dollar aggregate insurance coverage. With a ten-million-dollar umbrella coverage for both comprehensive general liability and workman's comp. DECO also carries a 10-million-dollar Pollution policy that is demolition and asbestos specific.

COMPANY BACKGROUND:

DECO has become a unique provider of a full range of demolition, abatement, site development, and environmental site remediation service. Our skilled staff and specialized equipment deliver safe and efficient solutions for all demolition and environmental needs. Our management has over 20 years' experience in the demolition, construction, and equipment industries.

DECO has become a market leader in the demolition industry by successfully providing our services to a wide range of projects including large scale commercial developments, industrial facilities, and government/municipal facilities. We pride ourselves providing our customers professional, safe, and efficient execution of the designated work to meet their needs. The goal of DECO is to exceed the scheduling and cost performance goals of the customer while following all applicable safety and health regulations.

We sincerely appreciate the opportunity to quote this project. Should you have any questions or require additional information, please do not hesitate to contact me.

Sincerely,

DECO

Brandon Martin
President

Professional, Reliable

CP1820		Draft Project Budget	Expenses to DATE	Encumbrances	Remaining Balance	NOTES
DESIGN / ENGINEERING						
DIVISION/OBJECT						
051588-58238	Topo/treeful/utility/survey w/ private markout	8 500 00	-	8 500 00	-	
051588-58238	Phase I environmental report	-	-	-	-	
051588-58238	Phase II environmental report w/ SMP	-	-	-	-	
051588-58238	Design and Construction Administration	-	-	-	-	CPC has hired their own A/E with $40k
051588-58010	Printing	2,276 94	1 685 93	591 01	-	P/Card
	Permitting	-	-	-	-	
	CMT Testing	-	-	-	-	
051588-58208	SWPPP Monitoring	11 700 00	1,200 00	10,500 00	-	Newkirk - P1N0704
051588-58235	Advertising	1 073 50	986 22	087 28	-	Picard / Chronicle -PR200905
051588-52020	Construction Site Signage	1 000 00	-	1,000 00	-	
	Landscaping Design Subtotal	23,150.44	3,872.15	19,278.29	-	
051588-58238	Advertising	100 00		100 00	-	Chronicle Communications - PR194775
051588-58238	Design Services	30,950.00				
051588-58238	Handicap ramp design at new entrance	4,500.00				
051588-58238	additional building services	4,828.75	-	-	-	
	Total PO	49,278.75	44,523.79	4,754.96		Rosenblum Cole Architects - P154610
051588-58238	Handicap ramp design	600.00	600 00	-	-	Forsberg Engineering-P155443
051588-52208	Document Roof Condition	300.00	300.00	-	-	Skyview Aerial Solutions LLC (Peard)
	Building Renovations Design Subtotal	50,278.75	45,423.79	4,854.96		
051588-58238	Chimney stacks structural evaluation	11,820.00	11 820.00	-	-	Bennett Preservation-P154595
051588-58238	Construction Document Preparations	34,920.00	22,698.00	12,222.00	-	Bennett Preservation-P157887
051588-58238	Partial Removal & Preservation of stacks	60,355.00	-	-	-	Bennett Preservation Contract
	Chimney Stacks Design Subtotal	130,095.00	34,518.00	12,222.00	83,355.00	
	TOTAL D/E COSTS	209,524.19	83,813.94	125,710.25	83,355.00	
CONSTRUCTION						
051588-58240	Construction	309 557 00				AOS Specialty Contractors
051588-58240	CO#1 (bollard revisions, curb and gutter fencing credit irrigation booster pump, roof drainage water fountain drainage)	(2,204.33)	-	-	-	
	Construction Subtotal	307,352.67	123,611.53	272,741.15	2,204.33	
051588-58240	SCEG for Light 10 (assumed) Poles along street	-	-	-	-	
051588-52100	Water Tap/Impact Fees	3,936.00	3,936 00	-	-	CWS
051588-58002	Playground Equipment	89 125 52		89 125 52	-	Kompan Inc
051588-58005	Steel Trash Can	5 000.00	-	5,000 00		
051588-58005	FFE benches	17,000.00	-	17,000.00	-	
051588-58005	FFE - table & chairs	3,000.00	-	3,000.00	-	
	Landscaping Construction Subtotal	515,414.19	127,547.53	387,866.67	2,204.33	
051588-58240	Roof Evaluation and Repair	36,420 00				
	Increase (6 copper leaderheads downspouts to E & W side)	17,620.00	-		-	
	P154694 Subtotal	54,040.00	54,040.00			Coastal Roofing Co Inc - P154694
051588-58240	Construction	520,800 00				
	CO#1 (window and door lintels elevator allowance overage)	78,268 03				
	CO#2 (pendant lighting cleaning and painting repair and retrofit roof siding, breakroom improvements, replace doors at north entrance)	55 019.98				
	CO#3 (fire alarm system upgrade)	8,470 36				
	Construction Contract Subtotal	663,158.37	663,158.36	(142,356.36)	-	Satchel Construction LLC
	Building Renovations Construction Subtotal	719,198.37	719,198.36	(142,356.36)		
051588-58240	Partial Demolition of Stacks (down to height of 60ft)	485,690 00				DECO (Demolition Environmental Company)
	Chimney Stack Construction Subtotal	485,690.00			-	
	TOTAL CONSTRUCTION COSTS	1,720,680.56	848,743.89	245,510.30	2,204.33	
051588-52040	Landscape Contingency	2,204 33		2,204 33		
051588-52040	Interior renovation Contingency	517,269.38	-	517,269 38		
051588-52040	Chimney Stack Contingency	345,334.00		345,334 00	-	
051588-52040	General Contingency	351,950 80		351,950 80		
TOTAL PROJECT COSTS		3,148,883.26	930,557.83	2,216,325.43	91,559.33	

FUNDING SOURCES

YEAR	SOURCE	BUDGET	Revenues To Date	NOTES
2015	General Fund Reserves	$ 250 000 00		
2018	General Fund Reserves	$ 400 000 00		
	Charleston Parks Conservancy Contribution	$ 150 883 26		Expectation is CPC is going to provide $210K but will have also contracted out with a design consultant in the amount of $40K that they will be funding
	Cooper River Bridge TIF	$ 00 000 00		Added by CD committee 7/23/20 for playground enhancement
	Cooper River Bridge TIF	$2,250,000 00		
	TOTAL FUNDING	$3,148,883.26	$ -	

PROJECT SUMMARY

TOTAL PROJECT FUNDING	$3,148,883.26	$
TOTAL PROJECT COST	$3,148,883.26	$ -
PROJECT BALANCE	$ -	$ -

City of Charleston
Short Form Small Construction Contract

THIS CONTRACT, made this _____ day of _____, 20_____ by and between:

The Owner: City of Charleston
Department of Parks
823 Meeting Street
Charleston, SC 29403

and the Contractor: Demolition Environmental Company, LLC
PO Box 61900
North Charleston, South Carolina 29419

CP -1620 - Partial Removal and Preservation of the St Julian Devine Smoke Stacks
(Project Number) - (Project Name)

ARCHITECT ENGINEER – The A/E of Record for this Project is: Bennett Preservation Engineering

WHEREAS, the Owner requires the delivery of demolition, removal, and preservation services ("Work"), as a part of the St. Julian Devine Smoke Stack Preservation Project ("Project") as outlined in Exhibit A, Memorandum for Cooper Street Chimney Selective Demolition ("Services" or "Scope of Services"), dated September 2, 2020, prepared by Brandon Martin which is marked as EXHIBIT A and attached hereto as if fully written herein.

WHEREAS, the Contractor, whose South Carolina professional license is G121648, is prepared and qualified to provide to the City the requested services as outlined in Exhibit A and in accordance with the General Terms and Conditions of this Contract contained on pages 2 through 11 of this Contract.

OWNER: City of Charleston

BY: _____
John J. Tecklenburg, Mayor

Contractor:

BY: _____
(Signature of Contractor Representative)

_____
(Print or Type Name of A/E Representative)

TERMS AND CONDITIONS

NOW THEREFORE, the Owner and Contractor agree to all of the following terms and conditions set forth in this Contract.

1. TIME OF PERFORMANCE:

    a. THE EFFECTIVE DATE of this Contract shall be the date written above.
    b. THE DATE OF COMMENCEMENT shall be the date indicated in the Notice to Proceed.
    c. THE DATE OF SUBSTANTIAL COMPLETION shall be 60 calendar days after the DATE OF COMMENCEMENT, subject to adjustment in accordance with the terms of this Contract.
    d. THE DATE OF FINAL COMPLETION shall be the date that the Work has been completed and accepted by the Owner.

2. PAYMENTS TO THE CONTRACTOR for acceptable Work performed shall be as follows:

    a. THE CONTRACT SUM OF $485,990 to be paid in response to the Contractor's Applications for Payment as certified by the A/E and subject to the terms of this Contract.
    b. THE CONTRACT SUM is based upon the following alternates, if any, which are described in the Contract Documents and are hereby accepted by the Owner:
    Not Applicable ☒

3. LIQUIDATED DAMAGES ARE AS FOLLOWS:

    It is acknowledged that the Contractor's failure to achieve substantial completion of the Work within the Contract Time provided by the Contract Documents will cause the Owner to incur substantial economic damages and losses of types and in amounts which are impossible to compute and ascertain with certainty as a basis for recovery by the Owner of actual damages, and that liquidated damages represent a fair, reasonable and appropriate estimate thereof. Accordingly, in lieu of actual damages for such delay, the Contractor agrees that liquidated damages may be assessed and recovered by the Owner as against Contractor and its Surety, in the event of delayed completion and without the Owner being required to present any evidence of the amount or character of actual damages sustained by reason thereof; therefore Contractor shall be liable to the Owner for payment of liquidated damages in the amount of Five Hundred Dollars and no cents ($500) for each day that Substantial Completion is delayed beyond the Contract Time as adjusted for time extensions provided by the Contract Documents. Such liquidated damages are intended to represent estimated actual damages and are not intended as a penalty, and Contractor shall pay them to Owner without limiting Owner's right to terminate this Contract for default as provided elsewhere herein.

General Conditions

ARTICLE 1 – CONTRACT DOCUMENTS

A. The Contract Documents forming this Contract shall consist of the following:
    1. a fully executed Short Form Construction Contract (this document) and any listed attachments hereto;
    2. the Project Manual dated: N/A
    3. the Project Drawings dated N/A along with the Project Drawings listed in the Project Manual;
    4. all bid Addenda issued by the City;
    5. the Contractor's completed Bid Form;
    6. all Change Orders and Change Directives;

7. Exhibit A – titled Cooper St Chimney Selective Demolition dated September 2, 2020, prepared by Brandon Martin.

ARTICLE 2 – CONTRACTOR, OWNER, A/E PROVISIONS

A. The Contractor warrants to the Owner that:
   1. it and its subcontractors (if any) are financially able to complete the Work;
   2. it will perform all obligations, furnish all plant, material, equipment, tools, transportation, supplies and labor to complete the Work for the Contract Sum entered above;
   3. it is authorized and licensed to do business in the State of South Carolina and the City of Charleston;
   4. it will perform the Work with care and diligence and in a professional and Workmanlike manner as required by this Contact; and,
   5. it has visited the Work site and is reasonably apprised of the conditions in and around the Work area.

B. Contractor's Rights and Responsibilities

In addition to any other rights and responsibilities contained in this Contract, the Contractor shall:

1. not incur any expense chargeable to the Owner until this Contract has been authorized and fully executed by both the Owner and the Contractor.
2. pay for required construction permits or business license fees, labor, materials, equipment, tools, transportation, supervision, testing, etc., required to perform this Contract;
3. visit the Work site and obtain information to assist in familiarization with the Work site, its conditions and any limitations that would affect the performance of this Contract, including subsurface conditions;
4. have the right to rely on information contained in the Contract Documents, but shall give prompt and timely notice to the Owner of any apparent deficiencies or inconsistencies in the information furnished by the Owner or its A/E;
5. be responsible for all construction means, methods, techniques, procedures and safety measures in the performance this Contract;
6. employ only persons skilled in the Work for which it is to do, employ an experienced superintendent to supervise the Work of its employees and subcontractors who shall be responsible for the acts or omissions of the Contractor's agents and employees or those of sub-contractors and their agents and employees acting on behalf of the Contractor;
7. not be responsible for the failure of any contractor, sub-contractor, vendor, or other project participant, not under a contract with the Contractor, to fulfill its contractual responsibilities to the Owner or to comply with Federal, State, or local laws, regulations, and codes.
8. have, at the time of execution and for the duration of this Contract, all professional and business insurance, licenses and permits required to provide the required Services in the State of South Carolina, the City of Charleston and as required by this Contract.

C. Owner's Rights and Responsibilities

In addition to any other rights and responsibilities contained in this Contract, the Owner shall:

1. provide the Contractor with available information regarding the Project and the immediate area where the Project is located;
2. pay the Contractor for acceptable Work performed, in accordance with the provisions of this Contract;
3. if the Contractor fails to begin Work within fourteen (14) calendar days of the DATE OF COMMENCEMENT as indicated in the Notice to Proceed, the Owner shall have the right to declare the Contractor in material breach of this Contract and terminate the Contract immediately without notice;
4. act as the A/E in the absence of a licensed design professional.

D. A/E's Rights and Responsibilities

In addition to any other rights and responsibilities contained in the Contract, the A/E shall:

1. represent the Owner during the construction process through final completion of the Project, and as requested during the warranty period. The A/E will act on behalf of the Owner only to the extent provided in these Contract Documents or otherwise agreed by the Owner;
2. make periodic visits to the site during construction to become familiar with the progress and quality of the Project and to determine if the Project is being performed in a manner indicating that the Project is generally progressing in accordance with the Contract Documents;
3. make recommendations to the Owner as to the acceptance or rejection of any portion of the Project and communicate the Owner's decision to the Contractor;
4. review and approve or reject shop drawings and samples submitted by the Contractor;
5. respond promptly to all requests for information or clarification from the Owner or the Contractor;
6. make the interpretation and decision on matters concerning performance under, and the requirements of, the Contract Documents, upon written request of either the Owner or Contractor, said interpretation or decision of the A/E shall be final, subject to the dispute resolution provisions of this Contract;
7. review periodic requests for payment, and approve or reject the request, in whole or in part;
8. prepare Change Orders or Change Directives as directed by the Owner.
9. if during the course of executing the Work, the Contractor encounters material believed to be of archeological significance, then the Contractor shall immediately stop Work in the affected area and report the finding to the Owner and the A/E in writing. Except by written agreement of the Owner and Contractor, the Contractor shall not resume Work until the item of archeological significance has been removed by the Owner or the area has been rendered protected by the Owner.

ARTICLE 3 – CONSTRUCTION ADMINISTRATION

A. Shop Drawings and Samples

1. The Contractor shall review and approve Shop Drawings and Samples prior to their submission to the A/E. The Contractor's review shall be for compliance with the requirements of the Contract Documents and to ensure complete coordination of the Work.
2. The Contractor shall submit Not Applicable sets of Shop Drawings as specified in the Contract Documents, or in the absence of a specification, submit enough copies for the Owner to retain two copies plus the number desired to be returned to the Contractor.
3. The A/E will review the shop drawings and samples with reasonable promptness but only for conformity with the design.
4. The Contractor shall submit samples as required by the Contract Documents. The final installed product shall match the approved sample.

B. Materials and Workmanship

1. The Contractor shall not use or allow the use of any asbestos-containing product.
2. The Contractor shall not use or allow the use of lead material in public water application. Lead-free solder, flux and pipe must be used in all public drinking water and wastewater applications. Lead-free solder and flux is defined as containing less than 0.2% lead while valves, pipes and appurtenances must contain less than 8.0% lead.
3. The Contractor warrants that unless otherwise specified or permitted by the Contract Documents, all materials shall be new, in first class condition, and installed using workmanship of the highest quality in accordance with the Contract Documents.

C. Inspection and Testing of Materials

1. The Contractor shall have performed and documented all inspections and tests required by the Contract Documents, including those required by the City's building officials.

2. The Contractor shall leave uncovered all areas of Work that are called out in the Contract Documents to be left uncovered, or the A/E requests to be left uncovered prior to being inspected. The Contractor shall give adequate notice to the A/E of the time requested for an inspection of these areas.

D. Substitutions

1. Wherever the Contract Documents specify a particular product, article, appliance, equipment, or material and it is designated by manufacturer and model number, it is the intent to designate a level of quality, finish, appearance, function, or other factor that was desirable to have incorporated into the design. Equivalent products of alternate manufacturers may be used, but must meet or exceed the specification for the original product and must be approved in advance by the A/E.
2. The Contractor shall not substitute any product, article, appliance, equipment, or material that is specified without the prior written approval from the A/E, which shall be granted only with the concurrence of the Owner.

E. Changes in the Work

1. Only the Owner may authorize changes in the Work. Such changes shall be made by issuing either a Change Order or a Construction Change Directive, and the Contractor shall execute the changed Work promptly.
2. The Contractor shall provide supporting information as requested by the A/E or the Owner to document the cost of any changed Work.
3. The Contractor shall prepare its cost proposal including labor and material cost breakdown with overhead and profit added as follows:
   a. For the Contractor or subcontractor on Work performed by its own forces:

Overhead (%)	Profit (%)	Commission (%)
10	7	0

   b. For the Contractor or subcontractor on Work performed by its subcontractors:

Overhead (%)	Profit (%)	Commission (%)
10	0	3

   c. To a first tier subcontractor on Work performed by its subcontractors:

Overhead (%)	Profit (%)	Commission (%)
10	0	3

   d. No more than three levels of overhead, profit, and commission shall be allowed regardless of the number of subcontractor tiers ("commission" is defined as profit on Work performed by others). The Contractor or subcontractor shall not be allowed overhead or commission on the overhead, profit, and/or commission received by its subcontractors. Changes to the Work that decrease the Contract Sum, i.e., deleted Work, shall include Overhead, Profit, and Commission.
4. In the absence of a total agreement concerning the item(s) for a Change Order, a Construction Change Directive shall be issued and the Contractor shall proceed diligently with performance of the Work required.

F. Receiving and Storing Materials and Equipment

1. The Contractor shall have an authorized person or persons to receive all items and shall properly unload, check for completeness of shipments, and in-transit damage.
2. The Contractor shall properly handle and store materials, supplies, equipment etc. in accordance with the Delivery Order or manufacturer's printed instructions of each product.

G. Reports

1. The Contractor shall prepare Daily Progress Reports on a form provided by the Owner. Reports shall be submitted to the Owner on a weekly basis.

H. Time for Completion

1. Requests for time extensions shall be made promptly. Delays of the Work due to circumstances beyond the control of the Contractor shall be adequately documented and submitted to the Owner with any request for an extension of the time for the completion.
2. The time allowed for Substantial Completion includes five (5) calendar days per calendar month for delays due to inclement weather. Delays due to weather beyond the five days may be requested as a time extension to the time for completion. The Contractor shall submit job site weather data supporting the claim for an extension of time.
3. Should completion of the Work extend past the original or amended Contract Date of Substantial Completion, the Owner will retain as liquidated damages, and not as a penalty, the amount listed on Page 1 and reduce the Contractor's final payment by that amount.

I. Guarantees and Warranties

1. The Contractor shall remedy and make good all defects in material and workmanship at no additional cost to the Owner and pay for any damage to other Work or property resulting from such defects for a period of one year from the Date of Substantial Completion, excepting damage that is caused by misuse or abuse by the Owner. All warranties shall be assigned to the Owner at no cost to the Owner and without the approval of the Contractor.
2. Where guarantees and/or warranties are required in the technical sections of the specifications, or as noted on the drawings, exceeding the one-year guarantee period, the extended warranty period will govern.

J. Use of the Site

1. The Contractor shall confine its operations to areas permitted by laws and ordinances, and as defined in the Contract Documents. The site must be maintained in a reasonably clean condition, free of trash and debris. The Contractor shall, on a regular basis or as specifically requested by the Owner, remove from the site all trash, debris, tools and equipment no longer needed for the Project.
2. The Contractor shall provide access to the site where the Project is being completed for representatives of the Owner, the Owner, the A/E and for all authorities having jurisdiction over the Project.

K. Taxes

1. The Contractor shall include in its Bid, and pay for, all taxes in effect or scheduled to go into effect at the time of bidding.
2. The Contractor's attention is directed to Title 12, Chapter 8, of the SC Code of Laws, as amended, concerning withholding of tax for non-residents, employees, contractors and subcontractors.

ARTICLE 4- PAYMENTS

A. The Owner shall make payments no more often than monthly to the Contractor for acceptable Work, as scheduled on page 1 and in accordance with Title 29, Chapter 6 of the SC Code of Laws, as amended.

B. The Contractor shall make payments to subcontractors and suppliers for acceptable Work performed and materials furnished in accordance with Title 29, Chapter 6 of the SC Code of Laws, as amended.

C. Accompanying each Application for Payment, the Contractor shall submit to the A/E a Schedule of Values allocating all the various portions of the Project, and a Construction Schedule, to be used by the A/E as a basis for reviewing the Application for Payment. The Owner shall make progress payments to the Contractor for acceptable Work completed based on the approved Schedule of Values and the A/Es' evaluation of the Contractor's Application for Payment. The Owner shall retain ten (10) percent of the value of the Contractor's last payment until the Final Application for Payment is paid.

D. The Contractor's Final Application for Payment may be submitted when the following have occurred:

1. The Contractor has fully completed the Project which is the subject of this Contract, including the acceptable completion of all punch list items; and,
2. The Contractor furnishes a Consent of Surety to Final Payment (for bonded projects) and Releases of Lien from subcontractors and suppliers; and,

3. The Contractor has furnished to the satisfaction of the A/E and the Owner all operating and maintenance manuals, product information, supplier warranties and guarantees and all other project completion documents; and,
4. The Contractor has completed all training and other startup/turnover support activities with the Owner's staff.

E. If the Project is completed to the satisfaction of the A/E, the A/E shall certify the Final Application for Payment and the Owner shall make final payment to the Contractor.

ARTICLE 5 – CLAIMS

A. Each party may assert a Claim requesting an adjustment of the Contract Sum, a change in the Contract Time for completion, or other relief with respect to the terms of the Contract.

B. Claims under this Contract shall be submitted by written notice that a Claim is being asserted. The responsibility to substantiate a Claim rests with the party making the Claim.

C. Claims arising prior to the date the final payment is due must be initiated within twenty-one (21) days after occurrence of the event giving rise to such Claim or within twenty-one (21) days after the claimant first recognizes the condition giving rise to the Claim, whichever is later. By failing to give written notice of a Claim within the time required by this paragraph, a party expressly waives its Claim.

D. Pending a resolution of the Claim, including any dispute resolution under this Contract, the Contractor shall proceed to perform as required by the Contract and the Owner shall continue to make payments in accordance with this Contract.

ARTICLE 6 – DISPUTE RESOLUTION

A. The parties agree to attempt in good faith to resolve their disputes arising from a Claim or controversy arising out of or relating to the Contract. To the extent that the parties are unable to reach a resolution, the parties agree that any suit, action or proceeding arising out of or relating to the Contract shall be instituted and maintained only in a state or federal court located in Charleston County. The Contractor agrees that any act by the Owner regarding the Contract is not a waiver of either the State's sovereign immunity or the State's immunity under the Eleventh Amendment of the United States Constitution. As used in this paragraph, the phrase "the State" includes any governmental entity transacting business with the Contractor pursuant to the Contract (including the Owner).

ARTICLE 7 - SUSPENSION OR TERMINATION OF THE CONTRACT

A. Owner's Right of Termination
1. The Owner may, at any time, terminate the Contract, in whole or in part, with or without cause for the Owner's convenience, upon seven (7) days written notice to the Contractor.
2. The Owner may, upon written consent of the Contractor, reinstate the terminated portion of this Contract in whole or in part if it is determined by the Owner, in its sole discretion, that it is necessary or advantageous to the Owner. Compensation shall be equitably negotiated by agreement between the Owner and Contractor.

B. Contractor's Right of Termination
1. The Contractor may terminate the Contract if Work is stopped through no fault of the Contractor, or other persons performing Work, either directly or indirectly, for the Contractor, for a period of time exceeding ninety (90) consecutive calendar days due to a court order or other public authority having jurisdiction; or a National emergency which requires the Work to be stopped.
2. The Contractor may, upon seven (7) days written notice to the Owner and the A/E, terminate the Contract for the reasons stated above and be compensated for Work completed and materials stored in accordance with the Contract Documents.

C. Owner's Right of Suspension
1. The Owner may, at any time, suspend this Contract, in whole or in part, with or without cause, for such period of time as determined by the Owner;
2. The Contract Sum and Contract Time will be adjusted for increases in cost to the Contractor due to the delay or interruption of the Work, except that no increase will be granted for delays or

interruptions that are, or would have been, the responsibility of the Contractor or subject to an equitable adjustment covered under other provisions of the Contract.

ARTICLE 8 – PROTECTION OF PERSONS AND PROPERTY

A. The Contractor is responsible for job-site safety and the protection of persons and property within the Work site. The Contractor shall comply with all applicable laws, rules and regulations regarding safety.

B. If during the course of executing the Work, the Contractor encounters material believed to be hazardous or of archeological significance, the Contractor shall immediately stop Work in the affected area and report the conditions to the Owner and the A/E in writing. Except by written agreement of the Owner and Contractor, the Contractor shall not resume Work until the material has been rendered harmless, removed or protected.

C. As to hazardous materials, this Article shall apply only to hazardous, toxic or radioactive materials or substances subject to the regulations of agencies having jurisdiction such as, but not limited to, the S.C. Department of Health and Environmental Control (SCDHEC), the U.S. Environmental Protection Agency (USEPA) and the U.S. Nuclear Regulatory Commission (USNRC).

D. For the purposes of this Contract, the term "rendered harmless" shall be interpreted to mean that measured levels of verified hazardous, toxic or radioactive materials or substances are less than the applicable standards established by authorities having jurisdiction. In no event, shall the Owner have any responsibility for any substance or material that is brought to the Project site by the Contractor, any Subcontractor, any material supplier, or any entity for whom any of them is responsible, unless such materials or substances were expressly required by the Contract Documents. The Contractor agrees not to use any fill or other materials to be incorporated into the Work that are hazardous, toxic, or radioactive, or made up of any items that are hazardous, toxic, or radioactive.

ARTICLE 9 – INDEMNITY

A. The Contractor shall indemnify and save harmless the Owner and the Owner's officers, agents, and employees, from and against all losses and claims, demands, payments, suits, actions, recoveries, and judgments of every nature and description brought or recovered against them by reason of any act, omission, or default of the Contractor, its agents, or employees in the execution of this Contract. When the Owner submits notice, Contractor shall promptly defend any aforementioned action at no cost to the Owner. This obligation shall survive the suspension or termination of this Contract. The limits of insurance coverage required herein shall not serve to limit this indemnity obligation. The recovery of costs and fees shall extend to those incurred in the enforcement of this indemnity.

ARTICLE 10 – INSURANCE AND BONDS

A. The Contractor shall purchase and maintain insurance to protect against claims that may arise out of the Contractor's operations under the Work of this Contract. The limits shall be for not less than the limits set forth in this Article, shall be written on an occurrence basis and shall be in force for the duration of the Contract.

B. The Contractor's Liability Insurance shall include all major divisions of coverage and is to be based on a Commercial basis including the following:
   1. Premises – Operations.
   2. Independent Contractor's Protective.
   3. Products and Completed Operations.
   4. Personal and Advertising Injury.
   5. Contractual, including specified provisions for Contractor's obligations.
   6. Broad Form Property Damage, including Completed Operations.
   7. Owned, Non-Owned and Hired Vehicles.
   8. Errors and Omissions.

C. The Insurance required by this Article shall be written for not less than the following limits or greater if required by law or other provisions in the Contract:
   1. Commercial General Liability:
      a. General Aggregate (per project) $ 1,000,000

b. Products/Completed Operations	$ 1,000,000
c. Personal and Advertising Injury	$ 1,000,000
d. Each Occurrence	$ 1,000,000
e. Fire Damage	$ 50,000
f. Medical Expense (any one person)	$ 5,000

2. Business Auto Liability (including all owned, non-owned, and hired vehicles):

a. Combined Single Limit	$ 1,000,000
-OR-	
b. Bodily Injury & Property Damage (each)	$ 1,000,000

3. Workers Compensation

a. State	Statutory
b. Employer's Liability	$ 100,000 Per Accident
	$ 500,000 Disease, Policy Limit
	$100,000 Disease, Each Employee

D. The aggregate Limits of the Contractor's Insurance shall apply, in total for this Contract. This shall be indicated on the Certificate of Insurance as "Per Project", or in an attached policy amendment.

E. The Owner shall be listed as the certificate holder of the Contractor's Liability Insurance.

F. Certificates of Insurance shall be in the form of the latest edition of the ACORD 25 and shall be filed with the Owner prior to commencement of the Work. In addition to Certificates of Insurance, the Contractor shall supply a written endorsement to the Contractor's general liability insurance policy that names the Owner as an additional insured. The endorsement shall provide that the Contractor's liability insurance policy shall be primary, and that any liability insurance of the Owner shall be secondary and noncontributory. These Certificates shall contain a provision that coverages afforded under the policies will not be cancelled unless at least thirty (30) days prior written notice has been given to the Owner.

G. In no event shall any failure of the Owner to receive certified copies or certificates of policies required under this Article or to demand receipt of such certified copies or certificates prior to the Contractor's commencing the Work be construed as a waiver by the Owner of the Contractor's obligations to obtain insurance pursuant to this Article. The obligation to procure and maintain any insurance required by this Article is a separate responsibility of the Contractor and independent of the duty to furnish a certified copy or certificate of such insurance policies. Cancellation of insurance shall be grounds for the immediate termination of the Contract.

H. Bonds

The Contractor shall deliver to the Owner properly executed Performance and Payment Bonds. If the Contractor fails to provide the Owner with a properly executed Bond as required herein, Contractor shall be in material breach of its responsibilities under the Contract.

1. Bonds shall each be in the amount of 100% of the amount of the Contract.
2. The Surety providing the Bonds shall have, at a minimum, a "Best Rating" of "A" as stated in the most current publication of "Best's Key Rating Guide, Property–Casualty". In addition, the Surety shall have a minimum "Best Financial Strength Category " of "Class V" and in no case less than five (5) times the Contract amount. The Bonds shall:
   a. be issued by a surety company licensed to do business in South Carolina; and,
   b. be accompanied by a current power of attorney and certified by the attorney-in-fact who executes the bond on the behalf of the surety company; and,
   c. remain in effect for a period not less than one (1) year following the date of Substantial Completion or the time required to resolve any items of incomplete Work and the payment of any disputed amounts, whichever time period is longer; and,
   d. display the Surety's' Bond Number.

I. Property Insurance

The Contractor shall purchase and maintain Builder's Risk insurance in the amount of the Contract Sum and all subsequent modifications on a replacement cost basis. The Contractor shall be responsible for any deductibles. Such insurance shall be maintained until final payment has been made.

ARTICLE 11 – CORRECTION OF WORK

A. The Contractor shall promptly, and with due diligence, correct Work rejected by the A/E or the Owner for failure to conform to the requirements of the Contract, whether such defective Work is observed before or after Final Completion. The Contractor shall pay for correcting the deficient Work including additional testing and inspections and any compensation for A/E services and expenses involved.

B. If the Contractor fails to carry out the Work in accordance with the Contract Documents, and fails within a seven (7) day period after receipt of notice from the Owner to commence and continue correction of such default or neglect with diligence and promptness, the Owner may, without prejudice to other remedies it may have, proceed to correct such deficiencies. In such case, an appropriate Construction Change Directive shall be issued deducting from payments to the Contractor the reasonable cost of correcting such deficiencies, including the Owner's expenses and compensation to the A/E, if necessary.

C. The Contractor and the Surety (if the Contract is bonded) remain liable for any excess cost or damages resulting from actions set forth in this Article.

ARTICLE 12 – CONSTRUCTION BY OWNER

A. The Owner reserves the right to do Work with its own forces or award separate contracts for Work on the same project.

B. The Contractor agrees to allow access to the site by the Owner's workforce or separate contractor(s), and agrees to assist in coordinating the progress of the Work with the Owner.

C. The Owner shall have the responsibility to coordinate the activities of the various contractors working at the project location.

ARTICLE 13 – SUBCONTRACTORS

If the Contractor engages subcontractors to provide Work on the Contract, then the Contractor shall include, or cause to be included, in the agreement with those entities, all provisions contained in this Contract. Subcontractors and sub-subcontractors shall be bound by the same provisions as the Contractor and shall preserve and protect the rights of the Owner.

ARTICLE 14 – COMPLETION AND CLOSEOUT

A. The Contractor shall have completed the unfinished and defective Work listed in the "punch list" and notify the A/E of its completion. The A/E will schedule a Final Inspection and require the Contractor to demonstrate that all equipment and systems operate as designed. The Owner may elect to have other persons, firms or agencies participate in the inspections.

B. Failure of the Contractor to achieve completion within the allowed time shall entitle the Owner to consider the Contractor in breach of the Contract.

C. If more than one Final Inspection is required, the Contractor shall reimburse the Owner for all costs associated with the re-inspection, if any.

D. Final Payment shall not be due, nor shall retained funds be released, until the Contractor complies with the requirements of Article 4.

ARTICLE 15 – GOVERNING LAW

This Contract is entered into and shall be construed and governed in accordance with the laws of the State of South Carolina. Contractor and City shall: (1) submit to the jurisdiction of the state and federal courts located in Charleston County, South Carolina; (2) shall waive any and all objections to jurisdiction and venue; (3) and shall not raise forum non conveniens as an objection to the location of any litigation.

ARTICLE 16 - MISCELLANEOUS

A. The Contractor and Owner each bind themselves, their directors, officers, successors, executors, administrators, assigns and legal representatives to all provisions of the Contract. Neither party shall assign, sublet or transfer their interest in this Contract.

B. This Contract represents the entire and integrated agreement between the Owner and the Contractor. It supersedes any and all prior and contemporaneous communications, representations and agreements, whether written or oral relating to the subject matter of this Contract.

C. Nothing in this Contract shall be construed to give any rights, contractual relationship or benefit to a third party against either the Owner or the Contractor.

D. Nothing in this Contract shall prevent the Contractor from employing any independent consultant, associate, or sub-contractor to assist in the performance of the Services.

E. Unless otherwise included in the Contract, nothing shall require the Contractor to discover, handle, remove, or dispose of any hazardous or toxic materials in any form at the project site.

23.)

COMMITTEE / COUNCIL AGENDA

TO: John J. Tecklenburg, Mayor

FROM: R. Keith Benjamin **DEPT.** Traffic & Transportation

SUBJECT: BRIGADE STREET BIKEWAY PROJECT FINANCIAL AGREEMENT FOR APPROVAL

REQUEST: Approval of a Financial Participation Agreement between the South Carolina Department of Transportation (SCDOT) and the City of Charleston. In coordination with SCDOT scheduled resurfacing of Brigade/Cypress introduce a protected bikeway with addition of pedestrian ramps with bulb-outs; curb and gutter; leveling grades; rapid beacon flashers (RFFBs) and pavement markings. Total contribution from the city is $292,414.30 from the Cooper River Bridge TIF.

COMMITTEE OF COUNCIL: Ways & Means **DATE:** September 8, 2020

COORDINATION: This request has been coordinated with: *(attach all recommendations/reviews)*

	Yes	N/A	Signature of Individual Contacted	Attachment
Corporate Counsel	X			
BFRC	X			
Traffic & Transportation	X			X

FUNDING: Was funding previously approved? Yes ☐ No ☐ N/A ☐

If yes, provide the following: Dept./Div.: _____ Account #: _____

Balance in Account $ _____ Amount needed for this item $292,414.30

Does this document need to be recorded at the RMC's Office? Yes ☐ No ☐

NEED: Identify any critical time constraint(s).

CFO's Signature: _____

FISCAL IMPACT:

Mayor's Signature: _____

John J. Tecklenburg, Mayor

ORIGINATING OFFICE PLEASE NOTE: A FULLY STAFFED/APPROVED (except Mayor's Signature) PACKAGE IS DUE IN THE CLERK OF COUNCIL'S OFFICE NO LATER THAN 10:00AM THE DAY OF THE CLERK'S AGENDA MEETING.

CFDA No. Highway Planning & Construction

Project ID (PIN): P038528 Cost Center: _____ WBS No.: _____ Fund: _____ Functional Area: _____

Financial Participation Agreement
Between the
South Carolina Department of Transportation
And the City of Charleston

This Agreement executed on this _____ day of _____, 20_____, covers the responsibilities of the South Carolina Department of Transportation (hereinafter "SCDOT") and the City of Charleston (hereinafter "City") (collectively "the Parties") for the below described Project:

WITNESSETH THAT:

WHEREAS, SCDOT is an agency of the State of South Carolina with the authority to enter into contracts necessary for the proper discharge of its functions and duties; and

WHEREAS, City is a body politic with all the rights and privileges of such including the power to contract as a necessary and incidental power to carry out their respective functions covered under this Agreement; and

WHEREAS, SCDOT currently has a resurfacing contract that encompasses the intersection of Cypress Street / Brigade Street (S-10-114) with Meeting Street (US 52) in Charleston County; and

WHEREAS, City has requested that SCDOT add certain features to this intersection; and

WHEREAS, City has agreed to pay for the additional costs for the added features; and

WHEREAS, SCDOT is agreeable to incorporate the added features into the current contract;

NOW THEREFORE, in consideration of the several promises to be faithfully performed by the Parties hereto as set forth herein, the Parties do hereby agree as follows:

I. DESCRIPTION

The Project which is the subject of this Agreement is generally described as follows: The addition of pedestrian ramps with bulb-outs to narrow Meeting Street at the intersection; curb and gutter; drainage changes; pavement markings; and asphalt resurfacing (to include leveling to adjust grades for new drainage pattern).

"Exhibit A," attached hereto and specifically made a part of this Agreement, provides additional Project details and a map depicting the Project area.

The Project as described above shall be referred hereinafter as "the PROJECT."

II. OBLIGATIONS OF PARTIES

A. SCDOT WILL:

1. Identify an SCDOT employee to serve as SCDOT's Contact for City.

2. Perform all services required of SCDOT in accordance with SCDOT guidelines and policies.

3. Add the PROJECT as a change order to the existing contract covering the PROJECT location.

4. Accept maintenance responsibility only for standard transportation materials, structures, and workmanship within SCDOT rights-of-way according to common local practices. For those items which will be maintained by SCDOT, SCDOT will accept maintenance responsibility after construction of the PROJECT is complete and the PROJECT is accepted by SCDOT.

5. Within the limits of the South Carolina Tort Claims Act, be responsible for any loss resulting from bodily injuries (including death) or damages to property, arising out of any act or failure to act on SCDOT's part, or the part of any employee of SCDOT in performance of the work undertaken under this Agreement.

B. CITY WILL:

1. Provide SCDOT with plans using design standards in compliance with all applicable SCDOT requirements.

2. Install green pavement markings in accordance with accepted plans prior to the permit expiration date, if City chooses to install. This work must be coordinated with SCDOT's Charleston Construction "A" Office. City shall be responsible for all costs of the green markings.

3. Provide to SCDOT upon request copies of all basic notes, sketches, charts, plans, correspondence, and other data prepared, furnished, or obtained by or for City or its agent for the PROJECT.

4. Retain all records dealing with this PROJECT for three years after completion and acceptance of PROJECT and final audit, and such records will be made available to SCDOT for audit and review upon request.

III. FUNDING

A. The Parties estimate the total construction cost for the PROJECT to be $292,414.30.

B. SCDOT is not contributing any funding towards the PROJECT

C. City's share of funding for the PROJECT is estimated at $292,414.30. SCDOT will invoice City based on this Agreement approximately 30 days after execution of this Agreement.

D. City shall remit the invoiced amount to SCDOT within 30 days of receipt of invoice.

E. If it becomes apparent that the cost of the PROJECT will exceed the funding available, SCDOT will provide City notice prior to total expenditure of available funding and will provide an estimate of funds needed to complete the PROJECT. City shall remit to SCDOT the additional funding within 30 days of receipt of the notice. No work will be completed beyond that covered by available funds.

F. City is responsible for the total PROJECT cost, including any overruns.

G. In the event that the total cost of the PROJECT is less than originally estimated, SCDOT will refund any excess amount paid by City within 30 days of the final completion and closure of the PROJECT within SCDOT's accounting office. Refunds will not be unreasonably withheld, denied, or delayed.

H. INSERT FUNDING TABLE

Fund Priority	Fund Source	Total Amount	Federal Share	Federal Amount (Maximum)	State Share	State Amount	Other Share	Other Amount	Other Source
1	City of Charleston	$ 292,414.30	0%	$ -	0%	$ -	100%	$ 292,414.30	City of Charleston
Total Project Cost		$ 292,414.30		$ -		$ -		$ 292,414.30	

IV. GENERAL TERMS

A. The Parties hereto agree to conform to all applicable SCDOT policies, all State, Federal, and local laws, rules, regulations, and ordinances governing agreements or contracts relative to the acquisition, design, construction, maintenance, and repair of roads and bridges, and other services covered under this Agreement.

B. The Parties, or their authorized agents, shall agree to hold consultations with SCDOT as may be necessary with regard to the execution of supplements, modifications, or amendments to this Agreement during the course of this

PROJECT for the purpose of resolving any items that may have been unintentionally omitted from this Agreement. Such supplements, modifications, or amendments shall be subject to the approval and proper execution of the Parties hereto. No supplement, modification, or amendment to this Agreement shall be effective or binding on any Party hereto unless such supplement, modification, or amendment has been agreed to in writing by all Parties hereto.

C. Any and all reviews and approvals required of the Parties herein shall not be unreasonably denied or withheld.

D. All claims or disputes shall be filed with the SCDOT District Engineering Administrator, and the Parties will meet to attempt to resolve the dispute or claim. If unable to resolve the dispute with the District Engineering Administrator, the aggrieved Party may appeal the claim or dispute to SCDOT's Deputy Secretary for Engineering. The decision of the Deputy Secretary for Engineering shall be final and conclusive for all Parties.

E. All notices and other correspondence will be officially delivered as follows:

1. As to SCDOT:

South Carolina Department of Transportation
6355 Fain Boulevard
North Charleston, SC 29406
Attn: Daniel Burton, District Construction Engineer

2. As to City:

City of Charleston
Department of Traffic and Transportation
180 Lockwood Drive, Suite C
Charleston, SC 29403
Attn: Keith Benjamin, Director

F. The Parties each bind themselves, their respective successors, executors, administrators, and assigns to the other Parties with respect to these requirements, and also agree that no Party shall assign, sublet, or transfer its respective interest in the Agreement without the written consent of the others.

G. This Agreement is made and entered into for the sole protection and benefit of SCDOT and City, and their respective successors and assigns. No other persons, firms, entities, or parties shall have any rights, or standing to assert any rights under this Agreement in any manner.

H. This Agreement may be executed and delivered in counterparts, and if so executed, shall become effective when a counterpart has been executed and delivered by all Parties hereto. All counterparts taken together shall constitute one and the same Agreement and shall be fully enforceable as such. Delivery of counterparts via

facsimile transmission or via email with scanned attachment shall be effective as if originals thereof were delivered.

I. This Agreement with attached Exhibits and Certifications constitutes the entire Agreement between the Parties. The Agreement is to be interpreted under the laws of the State of South Carolina.

[Signature blocks on next page]

IN WITNESS WHEREOF, the Parties have caused this Agreement to be executed on their behalf

SIGNED, SEALED AND DELIVERED
IN THE PRESENCE OF

CITY OF CHARLESTON

_____
Witness

By:_____
(Signature)

Title:_____

SOUTH CAROLINA DEPARTMENT OF TRANSPORTATION

_____
Witness

By:_____
Deputy Secretary for Finance & Administration or Designee

RECOMMENDED BY:

_____
Deputy Secretary for Engineering or Designee

REVIEWED BY:

By:_____

Title: _____

EXHIBIT A

PROJECT AREA MAP

COUNTY	ROUTE NAME	ROUTE NO.	SHEET NO.
S.C. CHARLESTON	BRIGADE STREET / MEETING STREET	S-10-114 US 52	3

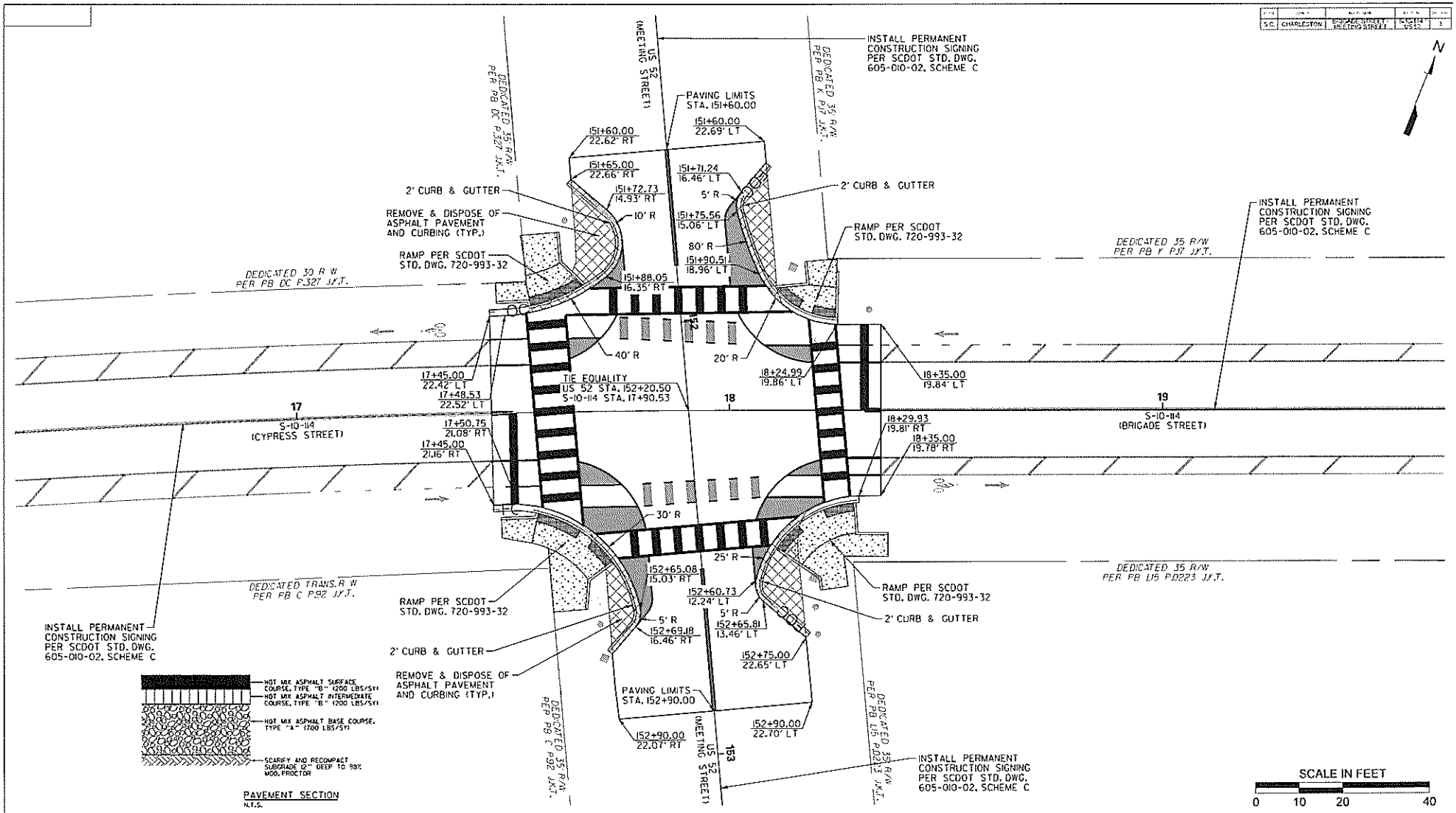

NOTES:
1. CITY OF CHARLESTON TO PROVIDE 3RD PARTY INSPECTOR AND PRESENT CREDENTIALS TO SCDOT AT THE PRE-CONSTRUCTION MEETING.
2. MILL AND OVERLAY 2" WITHIN THE PROJECT AREA. WHERE GRADING REQUIRES PAVEMENT RECONSTRUCTION, USE TYPICAL SECTION SHOWN ABOVE.

PLANS PREPARED BY:
Stantec
Stantec Consulting Services Inc.

REV. NO.	BY	DATE	DESCRIPTION OF REVISION
4			
3			
2			
1			

TOPO. ____ DATE ____ PLAN SCALE 1" = ____
DWG. ____ DATE ____ PROF SCALE 1" = ____ HORZ
R/W ____ DATE ____ SCALE 1" = ____ VERT

CHARLESTON COUNTY
BRIGADE STREET MEETING STREET
INTERSECTION IMPROVEMENTS
PLAN SHEET

SCALE: 1" = 10' RTE. S-10-114 US 52

User: hrw
W:\0002236\transportation\roadway\drawings\plan_sheets\02236_03_psh.dgn
5/21/2020

EXHIBIT B

DESIGN REFERENCES

This exhibit describes the general design considerations and criteria for the proposed Project.

Design standards shall be in accordance with the following design references as supplemented or amended by specific terms of this Agreement. Any variation in design from the included information shall require written approval from SCDOT.

- SCDOT Pre-Construction Survey Manual, effective as of the execution date of this Agreement
- SCDOT Roadway Design Manual, 2017, with updates effective as of the Final RFP release date and supplemented with AASHTO A Policy on Geometric Design of Highways and Streets, 2011
- AASHTO A Policy on Design Standards – Interstate System, 6th Edition
- AASHTO Roadside Design Guide, 2011, 4th Edition
- AASHTO Standard Specifications for Highway Bridges, 17th Edition
- SCDOT Standard Drawings, effective as of the execution date of this Agreement
- SCDOT Engineering Directives, effective as of the execution date of this Agreement
- SCDOT Preconstruction Design Memorandum, effective as of the execution date of this Agreement
- SCDOT Instructional Bulletins, effective as of the execution date of this Agreement
- AASHTO Guide for the Development of Bicycle Facilities, 2012
- AASHTO Guide for the Planning, Design, and Operation of Pedestrian Facilities, 2004
- SCDOT Americans with Disabilities Act Transition Plan, December 2014
- United States Access Board's Revised Draft Guidelines for Accessible Public Rights-of-Way (PROWAG), November 23, 2005
- SCDOT Roadside Plants to Avoid/Trees with Limitations on R/W, October 2014
- SCDOT Access and Roadside Management Standards, August 2008 with updates
- SCDOT Standard Specifications for Highway Construction, 2007
- SCDOT Supplemental Specifications (2007), effective as of the execution date of this Agreement
- SCDOT Supplemental Technical Specifications, effective as of the execution date of this Agreement
- SCDOT Qualified Product Lists, effective as of the execution date of this Agreement
- SCDOT Road Design Reference Material for Consultant Prepared Plans, June 2010
- FHWA Manual on Uniform Traffic Control Devices, 2009 with Revisions 1 and 2
- SCDOT Supplement to the MUTCD
- The Rule on Work Zone Safety and Mobility

- SCDOT Procedures and Guidelines for Work Zone Traffic Control Design, effective as of the execution date of this Agreement
- SCDOT Traffic Signal Design Guidelines, 2009 with updates
- Traffic Signal Material Specifications, effective as of the execution date of this Agreement
- Traffic Signal Supplemental Specifications, effective as of the execution date of this Agreement
- TRB Highway Capacity Manual, 2010
- AASHTO "Standard Specifications for Structural Supports for Highway Signs, Luminaires and Traffic Signals", effective as of the execution date of this Agreement
- SCDOT Preconstruction Advisory Memorandums, effective as of the execution date of this Agreement
- SCDOT Bridge Design Manual, 2006
- SCDOT Bridge Design Memoranda, effective between July 1, 2006 and the execution date of this Agreement
- 2012 AASHTO LRFD Bridge Design Specifications, Sixth Edition (with 2013 Interim
- Revisions)
- SCDOT Geotechnical Design Manual, 2010 Edition (Version 1.1)
- SCDOT Seismic Design Specifications for Highway Bridges, 2008 (Version 2.0)
- SCDOT Bridge Drawings and Details, effective as of the execution date of this Agreement
- AASHTO/AWS D1.5M/D1.5:2015 Bridge Welding Code
- SCDOT Pavement Design Guidelines, July 2008 Edition
- SCDOT Requirements for Hydraulic Design Studies, May 2009
- SCDOT Stormwater Quality Design Manual, effective as of the execution date of this Agreement
- AASHTO "Highway Drainage Guidelines," 2007
- AASHTO "Drainage Manual," 2014 first edition
- FEMA Regulations, 44 C.F.R. §§ 1 – 399
- Standards for Stormwater Management and Sediment Reduction, S.C. Code Ann. Regs. 72-405 (2012) *et seq.*
- South Carolina State Water Law
- AASHTO "Standard Specifications for Transportation Materials and Methods of Sampling and Testing" 2013 Thirty-Third Edition
- AASHTO An Informational Guide On Fencing Controlled Access Highways, 1990
- FHWA Memorandum of Agreement for Federal-Aid Preventive Maintenance Projects, 2015
- FHWA Mitigation Strategies for Design Exceptions, 2007

- NCHRP Report 672, Roundabouts: An Informational Guide – Second Edition
- SCDHEC NPDES Construction Permit # SCR160000
- SCDHEC NPDES MS4 Permit # SCS040001
- SCDOT Environmental Reference Document, 2008
- SCDOT Geotechnical Drawings and Details, effective as of the execution date of this Agreement
- SCDOT Street Trees and Sidewalk Planting Suggestions, May 2013
- SCDOT Vegetation Management Guidelines
- SCDOT Roadway CADD Manual

24.)

COMMITTEE / COUNCIL AGENDA

TO: John J. Tecklenburg, Mayor

FROM: Amy Wharton DEPT. BRFC

SUBJECT: HEALTHCARE BUDGET

REQUEST: APPROVAL OF THE CONTRACT RENEWALS OF BLUE CROSS/BLUE SHIELD ADMINISTRATION AND RX ADDENDUM

COMMITTEE OF COUNCIL: Ways & Means DATE: September 8, 2020

COORDINATION: This request has been coordinated with: *(attach all recommendations/reviews)*

	Yes	N/A	Signature of Individual Contacted	Attachment
Corporation Counsel	X			X
Human Resources	X			X

FUNDING: Was funding previously approved? Yes [ ] No [x] N/A [ ]

If yes, provide the following: Dept./Div _____ Account #: 181000 51200

Balance in Account _____ Amount needed for this item $23,098,033

NEED: Identify any critical time constraint(s).

CFO's Signature: Amy Wharton

FISCAL IMPACT:

The 2021 Healthcare budget was approved by the HR Committee on August 20, 2020. This includes the renewal of BCBS of South Carolina contract. There is a budget increase for 2021 of $1,668,458 which is an increase of 7.8% from the 2020 healthcare budget. The stop loss has been deferred.

Mayor's Signature: _____

John J. Tecklenburg, Mayor

ORIGINATING OFFICE PLEASE NOTE: A FULLY STAFFED/APPROVED (except Mayor's Signature) PACKAGE IS DUE IN THE CLERK OF COUNCIL'S OFFICE NO LATER THAN 10:00 AM THE DAY OF THE CLERK'S AGENDA MEETING.

City of Charleston
Healthcare Budget

	2020 Budget		2021 Budget			
Enrollment	1620		1600			NOTES:
Medical costs	17,400,000		19,000,000			
Dental costs	1,000,000		1,100,000			
RX Rebates	(1,000,000)		(1,000,000)			
Fully Insured vision plan	133,637		135,563			
Plan design changes	41,242		-			
Administration costs	911,816		902,999			
Stop Loss Fees	1,350,000		1,360,000			To be finalized in October
HSA contribution	56,700		78,400			City contributions $350/$700
HRA contribution	1,352,150	21,245,545	1,326,750	22,903,713	7.8%	City Contribution $600/$1250
Flexible Spending Administration	15,360		19,200			500 enrollees/$3.20 per enrollee per month
COBRA and Retiree Administration	16,260		15,960			
Wellness Program	53,500		43,500			Includes health fair ($3.5k) and gym reimbursement ($40k)
Fitbits	28,000		28,000			up to 250 participants plus corporate membership
Exercise Program	4,800		4,800			Net cost of onsite fitness/yoga classes
Diabetes Program	(128,240)		(128,240)			80 participants (per ROI report)
Vaccines	11,500		47,500			$25 for 500 people (flu) and $35 for 1000 people (COVID19)
Other Wellness Programs	10,250		10,250			Wellness programs, Stress program, testing supplies, etc.
Well Check program	116,750		98,750			Wellness contributions to HRA or HSA
Weight Loss Program	11,600		11,600			All in for Ten weight contest and weight loss classes
Firefighters Mental Health coverage	36,000		36,000			
Affordable Healthcare Act PCORI fee (due 7/31/XX)	8,250		7,000			Based upon the IRS calculation
	21,429,575	498,919	23,098,033	1,668,458		
Cost per enrollee	13,228		14,436			
	1.1%		9.1%			
Estimated Contributions						
Employees	3,400,343		3,524,143			See summary for 2021 premiums
Retirees	580,069		652,790			Retiree premiums includes 4% increase to city's contribution
Museum	298,026		247,727			100% of costs, enrollment is down
Cobra	81,847		69,302			102% of costs, enrollment is down
	4,360,285		4,493,962			
	20%		19%			
Net Budgeted Cost	17,069,290	253,334	18,604,071	1,534,781		
	253,334		**1,534,781**			**Change**
	1.5%		**9.0%**			

City of Charleston
Administrative Fee

	2020	2021	Increase
Blue Cross Blue Shield of South Carolina			
Admin Fee (rate lock thru 2023)	33.50	33.50	0%
My Health Essentials Suite	4.40	4.40	0%
Referral Mgmt.	0.55	0.55	0%
HRA	3.50	3.50	0%
RX admin fee	1.55	1.55	0%
United Concordia			
Dental Fee (rate locked thru 2022)	1.50	1.50	0%
ConnectYourCare (rate lock thru 2021)			
Cobra and Retiree billing (included in separate line)	2.50	2.50	0%
FSA (included in a separate line)	3.20	3.20	0%
HSA fee	2.35	2.35	0%
Benefitfocus			
Enrollment Platform	2.10	2.10	0%
Third Party Administrative cost	911,816	902,999	
Blue Cross Blue Shield of South Carolina			
Specific Stop Loss Limit	250,000	300,000	
784 Single	29.19	33.57	15%
816 Family	87.44	100.57	15%
1600	1,125,955	1,300,608	16%
Aggregate	60,000	60,000	0%
Total Stop Loss cost	1,185,955	1,360,608	8%
Total Administrative cost	2,097,771	2,263,607	7%

	2020 Rate	Increase	2021 Rate	Annual Contribution	Total Annual EE Contribution	Annual Increase
Medical Premiums						
Health Savings Acct.						
Employee	19.50	0.75	20.25	526.50	6,950	19.50
Employee + Spouse	108.25	4.00	112.25	2,918.50	4,203	104.00
Employee + Children	76.00	3.00	79.00	2,054.00	4,930	78.00
Family	135.50	5.00	140.50	3,653.00	10,959	130.00
Health Savings Acct. with a non-smoker discount						
Employee	13.75	0.75	14.50	377.00	36,494	19.50
Employee + Spouse	75.75	3.00	78.75	2,047.50	21,622	78.00
Employee + Children	53.50	2.00	55.50	1,443.00	25,397	52.00
Family	95.00	4.00	99.00	2,574.00	56,628	104.00
HRA Rates						
Employee	37.75	2.00	39.75	1,033.50	72,180	52.00
Employee + Spouse	158.50	11.00	169.50	4,407.00	93,076	286.00
Employee + Children	120.25	8.00	128.25	3,334.50	56,820	208.00
Family	191.00	13.00	204.00	5,304.00	234,225	338.00
HRA Rates with a non-smoker discount						
Employee	26.50	2.00	28.50	741.00	379,511	52.00
Employee + Spouse	114.50	8.00	122.50	3,185.00	493,293	208.00
Employee + Children	85.50	6.00	91.50	2,379.00	297,280	156.00
Family	138.00	9.00	147.00	3,822.00	1,237,716	234.00
					3,031,281 medical	
Vision Premiums						
Employee	1.00		1.00	26.00	17,810	
Employee + Spouse	2.00		2.00	52.00	10,140	
Employee + Children	1.50		1.50	39.00	5,655	
Family	2.50		2.50	65.00	26,000	
					59,605 vision	
Dental Premiums						
Employee	3.75	-	3.75	97.50	72,638	
Employee + Spouse	16.25	0.25	16.50	429.00	85,800	6.50
Employee + Children	12.00	0.25	12.25	318.50	50,960	6.50
Family	20.00	0.50	20.50	533.00	223,860	13.00
					433,258 dental	
					3,524,143	
				If no increase in premiums	3,327,182	
				Total increase	**196,961**	

AMENDMENT TO ADMINISTRATIVE SERVICES AGREEMENT

This Amendment to Administrative Services Agreement ("Amendment") amends the Administrative Services Agreement ("Agreement"), effective January 1, 2019 entered into between City of Charleston ("Purchaser") and Blue Cross and Blue Shield of South Carolina ("BCBSSC"). This Amendment is effective January 1, 2021.

WHEREAS, Purchaser and BCBSSC have entered into the Agreement (as amended from time to time) whereby BCBSSC provides certain Services for Purchaser; and

WHEREAS, Purchaser and BCBSSC desire to enter into this Amendment to the Agreement.

NOW, THEREFORE, Purchaser and BCBSSC hereby agree that the Agreement is hereby amended:

by deleting Schedule A in its entirety and replacing it with the attached Schedule A, "Effective Date: (Contract Year) of this Schedule A: January 1, 2021 through December 31, 2021"; and

EXCEPT as otherwise set further herein, all other terms and conditions of the Agreement shall remain in full force and effect.

IN WITNESS WHEREOF, BCBSSC and Purchaser have caused their names to be signed hereto by their respective officers.

BLUE CROSS AND BLUE SHIELD OF SOUTH CAROLINA
An Independent Licensee of the Blue Cross and Blue Shield Association

By: _____

Title: Vice President – Major Group Sales
Blue Cross and Blue Shield Division

PURCHASER

By: _____ Witness _____

Its: _____ Date _____
(Signature and Title)

Blue Cross and Blue Shield of South Carolina
Schedule A

Purchaser Name: City of Charleston

Purchaser Base Number (s): 03-57596

Effective Date: (Contract Year) of this Schedule A: January 1, 2021 through December 31, 2021

Administrative Charges: **January 1, 2019 through December 31, 2023**	$33.50 per Employee per month (PEPM)
Inter-Plan Arrangements Fees:	
BlueCard Program Fees:	
Access Fees:	Up to 3.79% of network savings, but not to exceed $2,000.00 per claim. **Note:** Access Fees will apply when Members receive services outside of the service area in which they reside. (The access fee percentage will be up to the currently allowable BlueCard Program rate based on account size. Rates are subject to annual revision.)
Administrative Expense Allowances (AEAs):	Up to $5.00 per claim professional and $11.00 per claim institutional. (This fee may include Non-Participating Provider Claim fees) additional Blue Cross Blue Shield Global ® Core AEA fees may apply.
Other BlueCard Program Fee:	
Other Fees:	
Claim Amount Account Funding Method:	By the deadline set forth in Article V of this Agreement.
Late Charge:	1% per month or such other maximum amount allowed by law
Retention Services Fee:	7.5% of the claims processed for twelve months from the date of termination.
Coordination of Benefits (Powered by Rawlings) Recovery Fee:	30% of all recoveries
Rawlings Mass Tort Services (Group Litigation) Recovery Fee:	30% of all recoveries
Subrogation Services Recovery Fees:	30% of all recoveries
Health Care Services Product Fees:	****Please refer to the Pharmacy Benefit Manager ("PMB") Addendum for fees related to PMB services****
Health Reimbursement Account (HRA) / Health Incentive Account (HIA):	$3.50 per Employee per month (PEPM) **(Applies only to sub-groups: 06-09,25,27,30-33 and 38-40)**
Telehealth | American Well BCOD:	No additional fee
Engagement Suite Standard Programs:	$4.40 per Employee per month (PEPM) Suite Includes: Health Coaching – Chronic Condition and Lifestyle, Essential Advocate, Rally- Wellness Engagement
Onsite Comprehensive Care Management:	$700 for Home Visit, then Monthly Case Rate of $750
Radiology Management (NIA):	$0.55 per Employee per month (PEPM)

Blue Cross and Blue Shield of South Carolina
Schedule A

IN WITNESS WHEREOF, BCBSSC and Purchaser have caused their names to be signed hereto by their respective officers.

BLUE CROSS AND BLUE SHIELD OF SOUTH CAROLINA
An Independent Licensee of the Blue Cross and Blue Shield Association

By: _____

Title: Vice President, Major Group Sales
Blue Cross and Blue Shield Division

PURCHASER
City of Charleston

By: _____ Witness_____

Its: _____

_____ Date_____
(Signature and Title)

PHARMACY BENEFIT MANAGEMENT SERVICES ADDENDUM TO ADMINISTRATIVE SERVICES AGREEMENT

This Addendum ("**Addendum**") to the Administrative Services Agreement dated as of the 1st day of January, 2020 entered into between Blue Cross and Blue Shield of South Carolina (**"BCBSSC"**) and **City of Charleston** on behalf of itself and its Group Health Plan(s) (collectively "**Purchaser**") (the "**Agreement**") shall be effective on the 1st day of January , 2020 (the "**Addendum Effective Date**"). The terms and conditions of this Addendum are incorporated by reference into and made a part of the Agreement.

RECITALS

WHEREAS, Purchaser has established a Group Health Plan for Members; and

WHEREAS, BCBSSC and Purchaser have entered into the Agreement (as amended from time to time) whereby BCBSSC provides certain services for the Group Health Plan established by Purchaser, including, but not limited to pharmacy benefit management services; and

WHEREAS, BCBSSC has contracted with a PBM to provide prescription benefit management and/or specialty pharmacy services to Members; and

WHEREAS, the parties desire to enter into this Addendum to govern the provision of PBM Services.

NOW, THEREFORE, in consideration of the mutual promises contained herein, Purchaser and BCBSSC hereby agree as follows:

1. **Definitions.** All terms in this Addendum, shall have the meaning assigned to it in either the Schedule of Definitions attached as **Exhibit A** or as otherwise defined herein. Terms not defined in this **Exhibit A** or otherwise in this Addendum shall have the meaning ascribed to them in the Agreement and the corresponding Plan of Benefits. In the event of a conflict between the terms of this Addendum and the Agreement, the terms of this Addendum shall control with respect to PBM Services.

2. **PBM Services.** Purchaser desires to engage BCBSSC as its exclusive provider of the prescription drug benefit services specified in **Exhibit B** ("**PBM Services**") to support Purchaser's Benefit Plans. Purchaser and BCBSSC agree to comply with the terms and conditions specified in this Addendum, including the exhibits, with respect to provision of the PBM Services.

3. **Term and Termination**
   a. **Term.** For purposes of this Addendum, the term and conditions shall commence on the Addendum Effective Date and shall continue for a period of twenty-four (24) months ("**Initial Term**"). Upon expiration of the Initial Term, this Addendum will automatically renew for additional twelve (12) month periods (each a "**Renewal Term**") unless either party provides the other party with written notice of non-renewal no later than ninety (90) days before the end of the Initial Term or a Renewal Term, such non-renewal to be effective at the expiration of the Initial Term or Renewal Term as applicable. The Initial Term and Renewal Term(s) may be collectively referenced herein as the "**Term.**"

   b. **Termination.** This Addendum may be terminated as follows:
      i. Either party may terminate this Addendum following written notice of breach of material obligations (including failure to pay any Administrative Fee identified herein or other fees, charges or non-Claim amounts due under the terms of this

Addendum) under this Addendum has been given by one party to the other; provided that such breach has not been cured within ten (10) days of the notice. Notwithstanding the foregoing, Purchaser's default in any payment of Claim amounts under this Addendum shall be subject to immediate termination under Section 3.b.ii. below.

ii. If Purchaser fails to make payment for any Claims amounts as required under this Addendum and payment remains outstanding for three (3) days from the due date, BCBSSC may immediately terminate this Addendum.

iii. In the event the Agreement is terminated for any reason, this Addendum shall terminate concurrent with the Agreement's termination date.

iv. If a Force Majeure Event, as specified in Section 7 of this Addendum, exceeds thirty (30) days, the other party may terminate this Addendum upon notice.

v. If Purchaser provides a self-certification that it is an eligible organization as described in Section 1.1.3 of **Exhibit B**, BCBSSC may terminate this Addendum upon notice to Purchaser effective on or after the date of the Contraceptive Coverage (as defined in Section 1.1.3 of **Exhibit B**), even if the date is retroactive.

c. **Effect of Termination.** Termination of this Addendum for any reason will not affect the rights and obligations of the parties arising out of any transactions occurring before the effective date of the termination, except as follows: (i) BCBSSC will have no obligation under any guarantees under this Addendum for the contract year (i.e., each twelve (12)-month period measured from the Addendum Effective Date or an anniversary of the Addendum Effective Date) in which this Addendum terminates, if the portion of the contract year before the effective date of termination is less than 12 full months; or (ii) as otherwise specified in this Addendum. Termination of this Addendum shall not impact the Agreement, the terms of which shall remain in full force and effect.

d. **PBM Transition Assistance.** Upon termination of this Addendum for any reason, BCBSSC will, as directed by Purchaser, instruct the PBM to provide Purchaser the following files to the extent applicable: (i) existing Home Delivery or Specialty Pharmacy open refill transfer files for Members, as based upon Purchaser's most current eligibility files; (ii) Purchaser's claims history file; (iii) Purchaser's prior authorization files; and (iv) Purchaser accumulator files. Each file will be in BCBSSC's standard format and delivered using a media agreed to by the parties. BCBSSC's PBM shall be solely responsible to process only those Claims that are for prescriptions dispensed before the termination date and received by the PBM from Network Pharmacies no later than thirty (30) days after the termination date and from Members no later than sixty (60) days after the termination date. Purchaser shall be responsible for any and all fees billed to BCBSSC by PBM for such files.

4. Financial Terms.

a. **Rates and Fees.** The parties agree to the rates, fees, reimbursements, credits and guarantees set forth on **Exhibit C** ("**Financial Terms**") for the PBM Services. Except as set forth in Section 4.c. and Section 4.e. below, the Financial Terms are effective for the Initial Term of this Addendum.

b. **Payment Terms.** Purchaser agrees to make payment of amounts due under this Addendum as set forth in the payment terms section(s) of the Agreement. All payment terms set forth in the payment terms section of the Agreement shall apply to Purchaser's payment obligations hereunder, unless expressly stated otherwise in this Addendum.

c. **Reservation of Rights.** BCBSSC reserves the right to modify or amend the Financial Terms in **Exhibit C** of this Addendum and/or the financial exhibit(s) of the Agreement if any of the following occur:

   i. any government-imposed change in federal, state or local laws or BCBSSC's interpretation thereof or industry-wide change that makes BCBSSC's or its PBM's performance of its duties hereunder more burdensome or expensive, including a change resulting from the elimination or material modification of historic Drug Manufacturer Rebate pricing models or changes made to the AWP benchmark or methodology; or

   ii. the unexpected movement of a Brand Drug to off-patent or where there are Generic Drugs, authorized Generic Drugs, low priced Brand Drugs or over-the-counter substitutes available; or

   iii. a change in the scope of PBM Services to be performed or Benefit Plan design upon which the financial provisions included in this Addendum are based; or

   iv. a reduction of greater than 10% in the total number of Members as compared to the total Members identified in the data provided by Purchaser or its representative at the time the final quote sheet was prepared, upon which the Financial Terms are based; or

   v. the addition of, or growth in, one hundred percent (100%) Member paid plans or consumer directed health plans (e.g., high deductible plans); or

   vi. any substantive change in Formulary, which may impact Rebates.

d. **Renewal Term.** BCBSSC may modify the Financial Terms in **Exhibit C** upon expiration of the Initial Term or on each twelve (12) month anniversary of the Renewal Term. BCBSSC will provide Purchaser with one-hundred and twenty (120) days' prior notice of the revised Financial Terms applicable to the Renewal Term. The change in the Financial Terms will become effective on the later of the first day of the Renewal Term or ninety (90) days after BCBSSC provides Purchaser with notice of the change. This Addendum will automatically be amended to replace **Exhibit C**, accordingly.

5. **Data Sharing.** Upon Purchaser's written request, BCBSSC or the PBM may provide up to two (2) standard electronic claims files to Purchaser's third party service provider, subject to the third party's execution of BCBSSC's form confidentiality agreement. Data Sharing fees apply to file requests which exceed the aforementioned two (2) in a given year and will be quoted upon request.

6. **Audit Rights.** On an annual basis during the Term of this Addendum and for a period of six (6) months following its termination, Purchaser, at its sole expense, may conduct an audit of Plan Specifications and Financial Terms specified in this Addendum. The audit may be performed by an independent auditor with pharmacy management knowledge, subject to the prior approval of BCBSSC and its PBM. The mutually-agreed upon auditor will execute a confidentiality and non-disclosure agreement with BCBSSC, PBM and Purchaser prior to conducting an audit. Audits require: (a) ninety (90) days prior written notice, (b) receipt of a fully-executed confidentiality and non-disclosure agreement, (c) a detailed audit scope document, and (d) a complete statistically valid Claims sample , if applicable. In the event on-site audit support is requested during an audit, such on-site support shall only be provided during normal business hours, following thirty (30) days written notice, and without undue interference to BCBSSC business activity. All audits shall be limited to information relating to the calendar year in which the audit is conducted and/or the immediately preceding calendar year. Notwithstanding the foregoing, no audits of any type will be initiated or conducted during the months of December and January. In no event will an audit include a review of the Pharmacy Benefit Management Services Agreement between PBM and BCBSSC nor any Drug Manufacturer agreements held by the PBM on behalf of BCBSSC. The parties agree that Purchaser shall not hire a third party to conduct a contingent fee audit, where the third party's compensation is based on a percentage of errors (or savings, or "uncovered recoveries", etc.), which may be found by the third party in its audit. Should Purchaser so contract with a third party to perform such contingent fee audit, BCBSSC has no obligation under the terms of this Agreement to cooperate with said third party in the conduct of such contingent fee audit.

7. **Force Majeure.** Except for payment obligations of Purchaser as set forth in this Addendum, the obligations of the parties hereunder shall be suspended to the extent that all or part of this Addendum cannot be performed due to causes which are outside the reasonable control of a party, could not be avoided by the exercise of due care, and are not the result of the fault or negligence of such party, including, but not limited to acts of God, fire, flood, earthquake, riots, acts of terrorism, whether applicable to BCBSSC, the PBM or Purchaser (a "**Force Majeure Event**"), provided such party gives reasonably prompt notice to the other party of the Force Majeure Event and related conditions and uses reasonable efforts to rectify such conditions. If the Force Majeure Event exceeds thirty (30) days, the unaffected party may terminate this Addendum upon notice.

8. **Ratification.** Except as specifically set forth herein, the terms and conditions of the Agreement (as amended) remain in full force and effect. In the event of a conflict between the terms of this Addendum and the Agreement, the terms of this Addendum shall control with respect to the subject matter herein.

9. **Entire Agreement.** Purchaser and BCBSSC acknowledge and agree that this Addendum, together with all Exhibits, contains the entire agreement between the parties with respect to the PBM Services provided herein and further agree that it shall supersede any offer including a Pharmacy Benefit Management Services Addendum that may have been made effective on a date prior to the Addendum Effective Date. Except as otherwise provided herein, this Addendum can only be modified by mutual written agreement of the parties.

In Witness Whereof, Purchaser and BCBSSC have read this Addendum and agree to be bound by it and therefore have caused it to be executed by their duly authorized representatives.

City of Charleston

By:_____

Print Name:_____

Title:_____

BLUE CROSS BLUE SHIELD OF SOUTH CAROLINA

By:_____

Print Name: Michael E. Harris

Title: VP Sales

Exhibit A
Definitions

340B Claims means Claims submitted by 340B pharmacies that price at a 340B price.

Average Wholesale Price or "**AWP**" means the average wholesale price, as reflected on the Pricing Source, for the Prescription Drug or other pharmaceutical products or supplies for the product dispensed on the date dispensed based on the actual 11-digit NDC reported by the Network Pharmacy.

Benefit Plan means the benefit plan(s) established and/or sponsored by Purchaser under which Purchaser is obligated to provide Covered Prescription Services.

Brand Drug means those Prescription Drugs identified by Medi-Span as having a multisource code of "M" (a branded drug product that is co-branded and not considered generic, nor is available as a generic), "N" (a single-source brand name drug product available from one manufacturer), "O" (an original branded drug product available from one or more manufacturers as a generic product), and/or with a Trademark Code of "T". The parties agree that when a drug is identified as a Brand Drug, it shall be considered a Brand Drug for all purposes under this Addendum.

Claim means each prescription or refill thereof ordered and issued by a Provider and submitted to PBM by a Member or a Network Pharmacy for adjudication.

Clean Claim means a Claim prepared in accordance with the NCPDP-promulgated standard format that contains all information necessary for processing for a Claim and submitted by Network Pharmacies for payment no later than one hundred eighty (180) days after the date of service, or a longer period of time if required by Laws. Member submitted Claims will be submitted within the timeframes specified in the applicable Plan of Benefits.

Compound Prescription Drug means a Prescription Drug that is prepared by a pharmacist who mixes or adjusts one or more Prescription Drugs to customize a medication to meet a Member's individual medical needs. Purchaser's payment to BCBSSC for providing a Compound Prescription Drug to a Member will include the Network Pharmacy contracted rate for each Prescription Drug included in the medication and one contracted dispensing fee minus any Cost-Sharing amount plus the applicable level of effort fee payable to the Network Pharmacy.

Cost-Sharing Amount means the coinsurance, copay, deductible or other cost sharing amount, either a specified dollar amount or a percentage of eligible expenses, that a Network Pharmacy may collect from a Member for Covered Prescription Services in accordance with the Member's Benefit Plan.

Covered Prescription Services means Prescription Drugs or other pharmaceutical products, services, devices, or supplies dispensed by a Network Pharmacy to a Member for which coverage is provided in accordance with the Member's Benefit Plan.

Dispensing Fee means the portion of the Claim cost attributable to payment to a Network Pharmacy for professional services to dispense a prescription or authorized refill in an amount set forth in **Exhibit C**.

Drug Manufacturer means an entity that manufactures, sells, markets or distributes Prescription Drugs; provided "Drug Manufacturer" shall not include wholesalers engaged in the sale and distribution of Prescription Drugs.

FDA means the United States Food and Drug Administration.

Formulary means the list of Prescription Drugs covered by the applicable Benefit Plan as developed by BCBSSC or its PBM and approved and adopted by Purchaser for use with the Benefit Plans.

Generic Drug means a non-patent drug identified by Medi-Span as having a multisource code of "Y" (a generic drug product available from one or more manufacturers), and/or with a Trademark Code of "B" or "G". Medi-Span shall be the sole basis of drug classifications for all purposes in regard to this Addendum. The parties agree that when a drug is defined as a Generic Drug, it shall be considered a Generic Drug for all purposes under this Addendum.

Governmental Authority means the Federal government, any state, county, municipal or local government or any governmental department, political subdivision, agency, bureau, commission, authority, body, instrumentality, or court that regulates the applicable party's activities or operations.

Home Delivery Pharmacy means a facility that is duly licensed to operate as a pharmacy at its location and to dispense Prescription Drugs via postal or commercial courier delivery to individuals, including Members. Home Delivery Pharmacy includes pharmacies that PBM owns or operates.

Laws means all applicable common laws and any and all state, Federal or local statutes (including, without limitation ERISA (the Employee Retirement Income Security Act of 1974)), ordinances, codes, rules, regulations, restrictions, orders, procedures, standards, directives, guidelines, instructions, bulletins, policies or requirements enacted, adopted, promulgated, applied, followed or imposed by any Governmental Authority, as amended, modified, revised or replaced, interpreted or enforced by any Governmental Authority, as applicable to each respective party.

Limited Distribution Drugs means Specialty Drugs which are distributed to either one or a very limited number of pharmacies, distributors or wholesalers as determined by the Drug Manufacturer.

Manufacturer Administrative Fees means the administrative fees paid by Drug Manufacturers to PBM for PBM's provision of Rebate administration services.

NCPDP means that National Council for Prescription Drug Programs.

NDC means the National Drug Code that is the identifying Prescription Drug number maintained by the FDA.

Net Paid Claim means all Clean Claims approved for payment minus reversals for a single prescription fill.

Network Pharmacy means a retail pharmacy, Home Delivery Pharmacy, Specialty Pharmacy, third-party pharmacy or other facility that (i) is duly licensed to operate as a pharmacy at its location and to dispense Prescription Drugs to individuals, including Members, and (ii) has entered into a Network Pharmacy Agreement.

Network Pharmacy Agreement means the agreement between a Network Pharmacy and PBM or BCBSSC to provide Covered Prescription Services.

Pharmacy & Therapeutics Committee means the committee formed by BCBSSC and/or PBM that reviews the clinical effectiveness of a legend drug for inclusion on the Formulary and creates criteria, policies and procedure for such inclusion including, but not limited to, clinically-appropriate quantity restrictions, step therapies and prior authorizations.

PBM means the pharmacy benefit manager with whom BCBSSC contracts to perform certain PBM Services as agreed to between BCBSSC and the PBM.

Plan Specifications means information provided by the Purchaser which BCBSSC and PBM reasonably need to perform the PBM Services, as further specified in **Exhibit B.**

Prescription Drug means a Generic Drug or Brand Drug that is approved by the FDA and required under Laws to be dispensed only as authorized by a written or oral order to dispense a Prescription Drug by an appropriately licensed and qualified health care professional in accordance with Laws.

Pricing Source means the Medi-Span Prescription Pricing Guide (with supplements) or another nationally recognized pricing source determined by PBM and BCBSSC.

Rebates means any discount, rebate, price protection amount or Manufacturer Administrative Fee that BCBSSC receives from Drug Manufacturers and/or its PBM that is contingent upon and related directly to Member use of a Prescription Drug during the Term. "Rebate" does not include any discount, price concession or other direct or indirect compensation received by the PBM or BCBSSC for the purchase of a Prescription Drug or for the provision of any product or service.

Specialty Drug means the Prescription Drugs that include at least one or more of the following: (a) biotechnology drugs; (b) orphan drugs used to treat rare diseases; (c) typically high-cost drugs; (d) drugs administered by oral or injectable routes, including infusions in any outpatient setting; (e) drugs requiring on-going frequent patient management or monitoring or focused, in-depth Member education; (f) drugs that require specialized coordination, handling and distribution services for appropriate medication administration; (g) infusion or health care injectable professionally administered by a healthcare professional or in a healthcare setting (but excluding supplies or the cost of administration); or (h) therapy requiring management and/or care coordination by a healthcare provider specializing in the Member's condition. Specialty Drugs shall not include any Prescription Drugs that: (x) require nuclear pharmacy sourcing; (y) are preventive immunizations; or (z) are administered only in the inpatient setting, as identified by BCBSSC.

Specialty Pharmacy means a facility that is duly licensed, credentialed, and accredited to operate as a pharmacy at its location and to dispense Specialty Drugs to individuals, including Members. Specialty Pharmacy includes pharmacies that PBM owns or operates.

U&C means the Network Pharmacy's usual non-covered customer selling price for a drug if the product were not eligible for coverage by a third party as reported by the Network Pharmacy. Claims that pay at U&C are not subject to a Dispensing Fee.

Exhibit B
Pharmacy Management Services

BCBSSC and its PBM will provide the PBM Services, including administrative, management, consultative, claims processing and other general pharmacy benefit management support services outlined herein in conjunction with administration and operation of the pharmacy benefits provided under the Benefit Plan(s).

1. SERVICES

1.1 Administrative Support

1.1.1 **General.** BCBSSC and its PBM will provide PBM Services in accordance with the most current Plan Specifications that Purchaser has provided to BCBSSC and which has been approved by BCBSSC.

1.1.2 **Benefit Plan Responsibility.** Although BCBSSC will perform PBM Services under this Addendum to support the Benefit Plans, with respect to pharmacy Claims: (i) Purchaser retains complete and exclusive discretionary authority over the Benefit Plans, and is the "administrator" (as defined in 29 U.S.C. § 1002(16)) of the Benefit Plans and (ii) Purchaser will comply fully with all applicable federal and state laws with respect to the Benefit Plans and is responsible ultimately for administering, managing and operating the Benefit Plans, adopting the Formulary and utilization management programs specified in this **Exhibit B**, controlling or directing appeals conducted by an independent outside party or independent review organization ("***IRO***") and determining, interpreting and amending all Benefit Plan structures and terms. Purchaser is at all times liable for Claims amounts under this Addendum. The parties specifically agree that, with respect to pharmacy Claims related to PBM Services, (a) neither BCBSSC nor its PBM nor any of their affiliates is acting on behalf of any "employee welfare benefit plan" (as defined in 29 U.S.C. § 1002(1)) or participants or beneficiaries in any such plan, or on behalf of a "fiduciary" (as defined in 29 U.S.C. § 1002(21)(A)) of any such plan under this Addendum; (b) Purchaser will not name or deem PBM or BCBSSC as a fiduciary for any purpose under this Addendum; (c) BCBSSC's and the PBM's role in all respects under this Addendum will be limited to that of a provider of "ministerial functions" (as described in 29 C.F.R. § 2509.75-8, D-2) and will be performed within the framework of policies and interpretations established by Purchaser, such that the PBM Services under this Addendum will not include the power to exercise discretionary authority over any Benefit Plan's management or operations or plan assets (if any); (d) Purchaser has selected and is solely responsible for each Benefit Plan's benefits and design; and (e) Purchaser retains all discretionary authority for each Benefit Plan, Benefit Plan assets (if any) and administration of each Benefit Plan. Purchaser acknowledges that changes in Benefit Plan benefits and designs or enrollment may result in a change to the Financial Terms, as set forth in Section 4.c. of the Addendum.

1.1.3 **Contraceptive Coverage.** Despite any contrary provisions in this Addendum or the Agreement, Purchaser represents that it is not an eligible organization with respect to contraceptive coverage under Public Health Service Act section 2713 and any related regulations or similar Laws ("**Contraceptive Coverage**"), and that it will be responsible for providing any Contraceptive Coverage and will not provide a self-certification that Purchaser is an eligible organization with respect to Contraceptive Coverage during the Term of the Addendum. The PBM Services set forth in this Addendum do not include PBM providing Contraceptive Coverage if Purchaser self-certifies as an eligible organization. BCBSSC may terminate this Addendum effective on or after the date of the Contraceptive Coverage,

even if the date is retroactive, upon notice to Purchaser, if Purchaser provides a self-certification that it is an eligible organization.

1.1.4 **Benefit Plan Eligibility Data.** Purchaser shall furnish to BCBSSC all of the Member's eligibility information pursuant to the terms of the Agreement. BCBSSC will provide the PBM with the electronic eligibility information (as well as Member personal address, phone number and email and work email, if available), for all Members who are entitled to Covered Prescription Services under the Benefit Plans. BCBSSC and its PBM will rely on the accuracy and completeness of the Member eligibility data supplied by Purchaser. Purchaser will be solely responsible for any errors in Member eligibility data that BCBSSC furnishes to PBM.

1.1.5 **Member Notification.** BCBSSC will make available electronically and/or via a BCBSSC website, a list of Network Pharmacies, Home Delivery Pharmacy information, the Formulary and other pharmacy benefit related information to Members, providers and other appropriate third parties. BCBSSC will distribute, as appropriate, ID cards to Members.

1.1.6 **Plan Specifications.** Purchaser will provide BCBSSC with the information regarding the Benefit Plan(s) BCBSSC and its PBM reasonably need to perform the PBM Services, including, but not limited to benefit definitions, Formulary, Pharmacy Networks, utilization management programs, applicable Cost-Sharing Amounts, number of days' supply for acute and maintenance medications, dispensing and other limitations, manuals and other Benefit Plan or Member information (collectively, "**Plan Specifications**"), as reflected in the Benefits Checklist. Purchaser will provide BCBSSC with the Plan Specifications no later than ninety (90) days before the PBM Services start date identified by the parties, unless the parties otherwise agree. Plan Specifications must be approved by BCBSSC in writing prior to the PBM Services being rendered. Purchaser must submit any changes to the Plan Specifications in writing to BCBSSC at least ninety (90) days prior to the desired implementation date for BCBSSC's review and approval. The parties acknowledge and agree that email confirmation by the parties of the change request and approval are sufficient under this provision. If a Governmental Authority requires changes to the Plan Specifications, such Plan Specifications will automatically be amended to comply with such requirement. Purchaser's failure to provide the Plan Specifications or changes to the Plan Specifications within the time periods stated in this section may delay implementation of the PBM Services and guarantees, and implementation of the requested changes. Purchaser is responsible for the accuracy, completeness and timeliness of all Plan Specifications, and acknowledges BCBSSC's reliance on, the Plan Specifications. The initial Plan Specifications, as well as any subsequent updates, will be maintained by BCBSSC in the benefit detail report.

1.2 **Pharmacy Network Administration**

1.2.1 **Pharmacy Network.** BCBSSC will provide Members access to a network of pharmacies ("***Pharmacy Network***"). Upon request, BCBSSC will make available to Purchaser a current list of Network Pharmacies in the Pharmacy Network. Purchaser acknowledges that BCBSSC and/or its PBM may add or remove Network Pharmacies from the Pharmacy Network.

1.2.2 **Pharmacy Network Rates and Payments.** Pharmacy rates may vary and the proposed network rates in **Exhibit C** do not necessarily reflect the actual contracted rate between the PBM and the Network Pharmacy. Purchaser acknowledges that the amount paid to the Network Pharmacy may not be equal to the amount billed to Purchaser by BCBSSC. Purchaser acknowledges PBM and BCBSSC will retain any such difference as compensation for PBM Services.

1.2.3 **Standard Pharmacy Audit Services.** BCBSSC will instruct its PBM, in accordance with the PBM's standard audit program and as required by Laws, to conduct real-time and retrospective desk audits and selected on-site audits of the Network Pharmacies to determine whether the Network Pharmacies are submitting appropriate billings for payment by Purchaser or Members. BCBSSC will apply as a credit to invoices payable by Purchaser to BCBSSC, the amounts recovered from these audits which are applicable to Purchaser's Benefit Plan. Purchaser will be financially responsible for all expenses incurred in connection with audits of Network Pharmacies requested by Purchaser that are not required by Laws. BCBSSC and its PBM will use commercially reasonable efforts to collect amounts owing as a result of these standard pharmacy audits, provided that neither BBCBSSC nor its PBM shall be required to initiate court proceedings to comply with this Section 1.2.3.

1.3 **Claims Processing and Adjudication.** PBM will adjudicate, process or pay Claims for Covered Prescription Services in accordance with the Plan Specifications. PBM will pay in accordance with Plan Specifications and applicable Laws, only Clean Claims (a) submitted by the Network Pharmacies in a timely manner through PBM's point-of-service system in accordance with NCPDP guidelines, and (b) properly submitted by Members as requests for reimbursement for Covered Prescription Services.

1.4 **Benefits Administration and Support**

1.4.1 **Utilization Management Program**

1.4.1.1. **Development and Support.** Purchaser will implement for the Benefit Plans, BCBSSC's standard utilization management programs designed to promote cost-effective drug utilization management and to discourage Prescription Drug over and under-utilization. BCBSSC or its PBM may, on behalf of Purchaser, (a) communicate with Members to describe health-related products or services (or payment for the products or services) provided by or included in the Benefit Plan through the PBM Services, including communications about Network Pharmacies, and health-related products or services available only to Members that add value to and are not part of the Benefit Plan; (b) conduct population-based activities relating to improving the health of Members and reducing their healthcare costs; and (c) contact Members with health education information and information about Prescription Drugs, treatment alternatives, and related functions.

1.4.1.2. **Prior Authorization Services.** BCBSSC or its PBM will conduct prior authorizations as specified herein and will approve or deny the Claim, as applicable, for the fees set forth in **Exhibit C.** BCBSSC and its PBM will respond to properly submitted prior authorization requests from Providers or Members using utilization management standards and guidelines established in accordance with Section 1.4.1.1 of this **Exhibit B.** Purchaser retains complete and exclusive discretionary authority over approval of prior authorization requests, including Benefit Plan overrides (subject to the professional judgement of the dispensing pharmacist); however, to the extent that Purchaser-directed overrides impact BCBSSC's (a) compensation, (b) cost to provide PBM Services or (c) ability to satisfy a guarantee under this Addendum, BCBSSC may amend the Financial Terms in **Exhibit C** to the extent needed to compensate BCBSSC for the effect of such overrides.

1.4.2 **Quality Assurance Program.** The PBM will implement its standard quality assurance program for the Benefit Plan(s) that includes quality measures and reporting systems targeted at reducing medical errors and adverse drug interactions. In addition, PBM will develop and implement systems or require Network Pharmacies to implement systems to: (a) offer Member counseling, when appropriate; (b)

identify and reduce internal medication errors; and (c) maintain up-to-date Member quality assurance and patient safety program information.

1.4.3 **Administrative Grievances and Appeals.** At Purchaser's request, and subject to Section 1.1.2 of this **Exhibit B**, BCBSSC will process initial Benefit Plan coverage determinations and exception requests and support Purchaser in connection with Benefit Plan appeals and grievances, as mutually agreed upon, and in accordance with Plan Specifications, this Section 1.4.3, and to the extent required by Laws.

1.4.4 **Changes Due to Shortages, Recall or Public Health and Safety Concern.** In the event of a Prescription Drug shortage or recall or public health and/or other material safety concerns impacting or related to the distribution or dispensing of Prescription Drugs, Purchaser acknowledges and agrees that BCBSSC may make temporary clinically appropriate changes to the Formulary status and/or tiering of Prescription Drugs, days' supply limitations, Pharmacy Network access, utilization management programs or similar programs or initiatives to address such concerns. Prescriptions Drugs impacted by such changes shall be excluded from all financial and performance guarantees.

1.4.5 **Other Clinical Services.** Upon Purchaser's request and for an additional charge to Purchaser, BCBSSC will help Purchaser develop and implement additional quality initiatives, intervention programs or other clinical services.

1.5 Formulary

1.5.1 **Formulary Adoption.** Purchaser will adopt as the Formulary one or more of the formularies offered by BCBSSC that are developed and maintained by the Pharmacy & Therapeutics Committee, as described in Section 1.5.4 of this **Exhibit B**.

1.5.2 **Formulary Management.** BCBSSC will make the Formulary available to Purchaser, plan providers or other appropriate parties via the applicable BCBSSC website. Except as provided in this Addendum, Purchaser will not copy, distribute, sell or otherwise provide the Formulary, to another party without BCBSSC's prior written approval.

1.5.3 **Formulary Changes.** Purchaser acknowledges and agrees that BCBSSC may include in the Formulary new FDA-approved medications according to the following schedule: (a) if an open formulary, all new covered FDA-approved medications (formulary and non-formulary) will be included in the Formulary upon publication in the Pricing Source pricing index and loading into PBM's systems or (b) if a closed formulary, all new covered FDA-approved medications (formulary only) may be included in the Formulary after review and addition to the Formulary by the Pharmacy & Therapeutics Committee. Following changes to the Formulary, BCBSSC will provide or make available appropriate notifications of Formulary changes to Purchaser, Members and prescribing physicians as required by Laws or as agreed to by the parties.

1.5.4 **Pharmaceutical and Therapeutics Committee.** The Pharmacy & Therapeutics Committees will develop and maintain the formularies offered by BCBSSC by: (a) selecting Prescription Drugs to include in formularies; (b) periodically reviewing the formularies, evaluating new and therapeutically equivalent Prescription Drugs for inclusion in the formularies; (c) establishing programs and procedures to address cost-effective drug therapy; (d) reviewing requests to include non-formulary Prescription Drugs in formularies; (e) implementing educational programs; (f) advising BCBSSC on other matters about the use of Prescription Drugs; (g) overseeing drug utilization review programs or quality

assurance programs or auditing and reviewing the programs' results; and (h) reviewing adverse drug reactions and making recommendations to minimize their occurrence. The Pharmacy & Therapeutics Committee's functions, deliberations and results, including development and maintenance of the formularies, constitute opinions only of the Pharmacy & Therapeutics Committee and will not bind BCBSSC, BCBSSC or its PBM.

1.5.5 **No Endorsement.** The development and maintenance of the formularies offered by BCBSSC will not be construed as an endorsement of any Prescription Drug product or drug manufacturer. Neither BCBSSC nor its PBM will be responsible for any actions or omissions of the Pharmacy & Therapeutics Committee or any adverse consequences that may relate, directly or indirectly, to Purchaser's or a Member's reliance on the Pharmacy & Therapeutics Committee.

1.6 **Rebate Management**

1.6.1 **Rebate Eligibility.** Purchaser acknowledges and agrees that BCBSSC may contract with a PBM and/or Drug Manufacturers for Rebates during the Term of this Addendum. BCBSSC will remit Rebates to Purchaser if: (a) **Exhibit C** specifies that Purchaser will be eligible for Rebates; (b) Purchaser satisfies the minimum Rebate contract criteria specified in Section 1.E. of **Exhibit C**; and (c) PBM has received Rebates resulting directly from Purchaser's satisfaction of the foregoing clause (b). PBM, in its sole and absolute discretion, may enter into agreements for Rebates concerning Prescription Drugs on the formularies offered pursuant to this Addendum. Rebates are negotiated based upon PBM's book of business rather than a Purchaser-specific basis. Purchaser acknowledges that many factors affect the amount of Rebates, including benefit design, arrangements with Drug Manufacturers, volume of Claims, formulary structure, patent expiration, and PBM's overall business strategy. Purchaser understands that not all Brand Drugs and not all Prescription Drugs are eligible for Rebates, and BCBSSC and its PBM are not obligated to submit for Rebates Claims that it does not believe are eligible to receive Rebates. Claims that may not be eligible to receive Rebates include Claims: (a) with invalid service provider identification or prescription numbers; (b) paid one hundred percent (100%) by a Member as a result of Purchaser's implementation or addition of a Benefit Plan requirement for any category of Claims (except specific items excluded from coverage); (c) for devices without a Prescription Drug component or claims that are not for Prescription Drugs (except for insulins or diabetic test strips); (d) that are re-packaged NDCs; (e) over one hundred eighty (180) days old; (f) for compounds; (g) Claims under section 340B of the Public Health Service Act which typically receive a discount or rebate directly from Drug Manufacturers; (h) from entities eligible for federal supply schedule prices (e.g., Department of Veterans Affairs, U.S. Public Health Service, Department of Defense); (i) for long term care facility; (j) vaccines; (k)for Medicaid Managed Care in states where the state law prohibits PBM from collecting supplemental rebates; or (l) for utilization pursuant to a consumer card or discount card program where the Benefit Plan had no cost liability on the claim or the Claims are otherwise not eligible for Rebates under a rebate agreement with the applicable Drug Manufacturer.

1.6.2 **Rebate Guarantees.** Except for any Rebate amounts described in **Exhibit C**, BCBSSC has no obligation to obtain any particular Rebates for Purchaser. Rebate guarantees are subject to Purchaser's eligibility for Rebates and the Rebate guarantee contingencies under this Addendum, including the requirements and contingencies described in this Section and in Section I.E. of **Exhibit C.**

1.6.3 **Collection.** To the extent of any overpayment or erroneous payment to Purchaser by BCBSSC, Purchaser will immediately refund such payment or permit BCBSSC to recover such amount via offset from other sums due to Purchaser under the Agreement or this Addendum.

1.6.4 **Disbursement.** Provided Purchaser is in compliance with the terms of this Addendum, BCBSSC will reconcile, allocate and credit or disburse all Rebates based upon the provisions set forth in this Addendum. Purchaser does not have a right to interest on any Rebate payments received by BCBSSC or PBM.

1.6.5 **Other Relationships.** Purchaser acknowledges and agrees that BCBSSC may receive and retain credits, payments, or other amounts from its PBM, Drug Manufacturers, or other third parties, and unless otherwise expressly set forth in this Addendum, such amounts are not payable to Purchaser or Members and BCBSSC will retain these payments to help stabilize overall rates and offset expenses. Amounts paid to Network Pharmacies, or discounted prices charged at Network Pharmacies, are not affected by these retained amounts. Any Cost-Sharing Amount that a Member must pay for Covered Prescription Services does not change due to receipt or retention of any such amounts by BCBSSC.

1.7 **Purchaser Incentives and Purchase Discounts**. If Purchaser, or its affiliates, contracts with another party, including a Drug Manufacturer, for a discount, utilization limit, rebate or other incentive associated with the utilization of a Prescription Drug, Purchaser will be in breach of this Addendum, and BCBSSC, in addition to any other remedies available to it under this Addendum or in law or equity, may determine in its sole discretion that Purchaser will not be eligible for any applicable Rebates and adjust any Financial Terms described in **Exhibit C** of this Addendum and/or the financial exhibit(s) of the Agreement. Purchaser will accept only amounts due under this Addendum applicable to eligible Members. Upon request, Purchaser will cooperate fully with BCBSSC, PBM or a Drug Manufacturer to verify Purchaser's participation in any Rebate program and that all Rebate-related payments were made solely for Covered Prescription Services to eligible Members.

1.8 **E-Prescribing**. PBM will provide prescribers with electronic access to Benefit Plan information, including: (a) Member eligibility status: (b) Member medication history; (c) Formulary status of the Prescription Drug being prescribed; (d) listing of Generic Drug or Brand Drug Formulary alternative medications; (e) Member coverage information where applicable; (f) applicable Cost-Sharing Amount; and (g) drug classification information required by the Centers for Medicare & Medicaid Services or successor Governmental Authority.

2. **HOME DELIVERY PHARMACY SERVICES**

2.1 **Home Delivery Services**. Home Delivery Pharmacies will provide Home Delivery Pharmacy Covered Prescription Services to Members in accordance with the Plan Specifications. Once a prescription for a Covered Prescription Service has been transmitted to a Home Delivery Pharmacy in accordance with Laws, such Home Delivery Pharmacy will promptly prepare, package and ship the applicable Covered Prescription Service to the Member or other authorized person or entity. Home Delivery Pharmacies will provide customer service support for Members who use Home Delivery Pharmacy Services. BCBSSC will make available to Members Home Delivery Pharmacy information via the applicable BCBSSC website.

2.2 **Control by PBM.** PBM will solely and exclusively control and supervise the operation and maintenance of PBM's Home Delivery Pharmacies and their respective facilities and equipment and provision of Home Delivery Pharmacy Covered Prescription Services. All decisions respecting the provision of Home Delivery Pharmacy Covered Prescription Services by PBM's Home Delivery Pharmacies will be made solely by PBM's Home Delivery Pharmacy and its duly authorized personnel, and not by Purchaser. The relationship between a Member and a Home Delivery Pharmacy will be subject to the rules, limitations and privileges incident to

the pharmacist-patient relationship. PBM may exclude from coverage by a Home Delivery Pharmacy under this Addendum a Prescription Drug that cannot be dispensed under PBM's Home Delivery pharmacy dispensing protocols or requires special record-keeping procedures.

2.3 **Home Delivery Rates.** Prices for Covered Prescription Services dispensed by the Home Delivery Pharmacy are specified in **Exhibit C.** Specialty Drugs are not available at Home Delivery Pharmacy rates, even if dispensed by a Home Delivery Pharmacy. If Member requests or requires expedited or alternative shipping methods other than PBM's standard method, Member will be solely responsible for those costs.

3. **SPECIALTY PHARMACY SERVICES**

3.1 **Specialty Services.** PBM will provide Specialty Drug Covered Prescription Services as follows: Purchaser will receive Specialty Drug Covered Prescription Services exclusively from PBM's Specialty Pharmacy and not from any other retail, mail, specialty or other pharmacy, including a Network Pharmacy, provided that Limited Distribution Drugs not dispensed by PBM's Specialty Pharmacy are excluded from the Specialty Services and excluded from any Specialty Drug pricing guarantees.

3.2 **Specialty Drugs.** On a periodic basis, BCBSSC will review the Specialty Drugs covered under this Addendum. BCBSSC will make available to Purchaser the list of Specialty Drugs electronically or via an applicable BCBSSC website.

3.3 **Control by PBM.** PBM will solely and exclusively control and supervise the operation and maintenance of PBM's Specialty Pharmacies and their respective facilities and equipment and provision of Covered Prescription Services. All decisions respecting the provision of Covered Prescription Services by PBM's Specialty Pharmacies will be made solely by PBM and its duly authorized personnel, and not by Purchaser. The relationship between a Member and a Specialty Pharmacy will be subject to the rules, limitations and privileges incident to the pharmacist-patient relationship.

7. **"Minimum Brand Effective Rate Guarantees"** means the following:

   a. The formula for this guarantee will be 1-(Total Discounted Ingredient Cost/ Total Undiscounted AWP).

   b. Total Discounted Ingredient Cost before the application of Cost-Sharing Amount will be used in this calculation.

   c. Dispensing Fees and taxes will not be included in the Total Discounted Ingredient Cost.

   d. Both the Total Discounted Ingredient Cost and Total Undiscounted AWP will be based on the date of dispensing (meaning delivered to the Member or his/her representative) for each Qualified Claim.

   e. "Total Undiscounted AWP" means the AWP of the 11-digit NDC of the Covered Prescription Service dispensed, and in no event shall average AWP or average of averages of AWP be used.

   f. All single source and all multi-source Brand Drug Qualified Claims will be included in the calculation with the exception of DAW5 Claims.

8. **"Minimum Generic Effective Rate Guarantees"** means the following:

   a. The formula for this guarantee will be 1-(Total Discounted Ingredient Cost/ Total Undiscounted AWP).

   b. Total Discounted Ingredient Cost before the application of Cost-Sharing Amount will be used in this calculation.

   c. Dispensing Fees and taxes will not be included in the Total Discounted Ingredient Cost.

   d. Both the Total Discounted Ingredient Cost and Total Undiscounted AWP will be based on the date of dispensing (meaning delivered to the Member or his/her representative) for each Qualified Claim.

   e. "Total Undiscounted AWP" means the AWP of the 11-digit NDC of the Covered Prescription Service dispensed, and in no event shall average AWP or average of averages of AWP be used.

   f. All single source Generic Drug Claims, multi-source Generic Drug Claims, authorized Generic Drug Claims, Generic Drugs with patent litigation, house Generic Drugs, Generic Drugs available in limited supply, and Claims that process with a DAW5 code that are Qualified Claims will be included in the calculation.

C. Pricing Terms and Conditions.

1. **Pharmacy Network Pricing Reporting, Reconciliation, and Payments.** On an annual basis within one hundred and twenty (120) days after the close of the calendar year, BCBSSC will provide to Purchaser a report setting forth the pricing achieved for each Pricing Component set forth this **Exhibit C** in accordance with the definitions set forth herein. Pharmacy pricing commitments and guarantees are measured on a Pricing Component basis and will be aggregated annually. Any dollar savings generated in excess of any Pricing Component may be used to offset a short fall for any other Pricing Component. Within sixty (60) days after the guarantees are measured and reconciled, BCBSSC shall pay to Purchaser the amount equal to any shortfall between the actual result and the minimum pricing commitment / guarantee on a dollar-for-dollar basis.

2. **"Lesser Of" Pricing.** Purchaser and/or Members will always pay the lesser of (i) AWP less the applicable percentage discount plus the applicable Dispensing Fee plus applicable tax, (ii) the MAC List price plus applicable Dispensing Fee plus applicable tax, (iii) (excluding Home Delivery Pharmacies and Specialty Pharmacies) the Network Pharmacy's U&C charge plus applicable tax, or (iv) the Network Pharmacy submitted cost, and (iv) for Members, or the applicable Cost-Sharing Amount.

3. **No Minimum Charge.** No minimum charge shall apply for any Home Delivery Pharmacy orders or Specialty Pharmacy orders.

D. Specialty Drug Pricing

Exclusive Specialty Pharmacy Program. Purchaser represents and warrants, to the extent that is allowed by Law, PBM's Specialty Pharmacies will be the exclusive Specialty Pharmacy provider under this Addendum. Such network exclusivity shall not apply to Specialty Drugs that PBM's Specialty Pharmacy does not distribute and cannot access.

E. **Rebate Guarantees.** For purposes of the Rebate Guarantees: (i) "Retail Pharmacy " includes Rebates on Claims (excluding Specialty Drugs) dispensed from retail pharmacies, LTC pharmacies, ITU pharmacies, HIF pharmacies, and in-house/direct pharmacies (regardless of days' supply or network), (ii) "Retail Maintenance" includes Rebates on Claims (excluding Specialty Drugs) dispensed from Retail 90 pharmacies, (iii) "Home Delivery" includes Rebates on Claims (excluding Specialty Drugs) dispensed from Home Delivery Pharmacies; and (iii) "Specialty" includes Rebates on Specialty Drug Claims regardless of dispensing pharmacy (*e.g.*, includes Specialty Drugs dispensed from retail pharmacies, Retail 90 pharmacies, Home Delivery Pharmacies, Specialty Pharmacies, in-house/direct pharmacies, or any other Network Pharmacy).

1. **Rebate Guarantee Payment and Reconciliation.** BCBSSC will remit to Purchaser the Rebates set forth herein with respect to Claims related to Members under this Addendum. Rebate Guarantees do not assume or require a minimum average day supply.

2. **Rebate Payments.** Rebate payments due to Purchaser shall be calculated ninety (90) days after the end of the calendar quarter and paid and reported within thirty (30) days after that.

F. Pharmacy Pricing and Rebate Guarantee Periods

Year 1: January 1, 2020 through December 31, 2020
Year 2: January 1, 2021 through December 31, 2021

Retail Pharmacy Network Offerings

Broad Retail Pharmacy Network		
	Year 1	Year 2
Minimum Brand Effective Rate Guarantee	AWP - 18.00%	AWP - 18.10
Minimum Generic Effective Rate Guarantee	AWP - 81.20%	AWP - 81.30%
Maximum Brand Aggregate Dispensing Fee Guarantee	$0.90 PNPC	$0.90 PNPC
Maximum Generic Aggregate Dispensing Fee Guarantee	$0.90 PNPC	$0.90 PNPC

Retail 90 Broad Pharmacy Network		
	Year 1	Year 2
Minimum Brand Effective Rate Guarantee	AWP - 20.00%	AWP - 20.10%
Minimum Generic Effective Rate Guarantee	AWP - 82.00%	AWP - 82.10%
Maximum Brand Aggregate Dispensing Fee Guarantee	$0.90 PNPC	$0.90 PNPC
Maximum Generic Aggregate Dispensing Fee Guarantee	$0.90 PNPC	$0.90 PNPC

Mail Service Network Offerings

Mail Service/Home Delivery Pharmacy		
	Year 1	Year 2
Minimum Brand Effective Rate Guarantee	AWP - 25.85%	AWP - 25.95%
Minimum Generic Effective Rate Guarantee	AWP - 85.90%	AWP - 86.00%
Maximum Brand Aggregate Dispensing Fee Guarantee	$0.00 PNPC	$0.00 PNPC
Maximum Generic Aggregate Dispensing Fee Guarantee	$0.00 PNPC	$0.00 PNPC

Specialty Network

PBM Specialty Pharmacy Exclusive		
	Year 1	Year 2
Minimum Brand Effective Rate Guarantee	AWP - 18.50%	AWP - 18.60%
Minimum Generic Effective Rate Guarantee	AWP - 18.50%	AWP - 18.60%
Specialty Drug Dispensing Fee	$0.00 PNPC	$0.00 PNPC

PNPC= per Net Paid Claim

II. Rebates

Rebate Management – BlueCross Lowest Net Cost Formulary		
Fixed Rebates	Year 1	Year 2
Retail Pharmacy - PNPB	$ 120.00	$ 130.00
Retail Maintenance - PNPB	$ 360.00	$ 380.00
Home Delivery – PNPB	$ 400.00	$ 410.00
Specialty – PNPB	$1,100.00	$1,200.00

PNPB = per Net Paid Brand Drug Claim

BlueCross Lowest Net Cost Formulary: The BlueCross Lowest Net Cost Formulary is managed by the Pharmacy and Therapeutics Committee. This formulary is designed to promote the use of generics and over-the-counter products, as well as clinically appropriate, cost-effective brand drugs. Rebate guarantees associated with the BlueCross Lowest Net Cost Formulary are contingent upon full alignment with this formulary and implementation of the corresponding prior authorization program and a qualifying plan design. In addition, the mail order plan design must also include an average ninety (90) days' supply via mail.

III. Administrative Fees

Administrative Fee	
	Administrative Fee
Base Administrative Fee	$0.00 PEPM
Clinical Program Admin Fee	$1.55 PEPM

Clinical Program Administration Fee includes the following programs:

- **Prior Authorization**

The prior authorization program is a quality and safety program that includes both Specialty and non-Specialty drugs and requires providers to document Medical Necessity before drugs in the program will be covered.

- **Quantity Management**

This quality and safety program limits the amount of certain Prescription Drugs which will be covered in a given period of time. Members can get a prescription filled for up to the allowed limit, but the program requires the Member's provider to document Medical Necessity before quantities above the limit will be covered.

- **Step Therapy**

The step therapy program requires the use of certain "first choice" medications before "second choice" medications will be covered. The claims system automatically searches for evidence of first choice

drugs in the Member's prescription history. If none is found, the provider can request coverage for a particular drug, based on Medical Necessity.

- **Opioid Risk Management Solution**

In keeping with the national effort to stem the tide of this epidemic, the opioid management program confronts all aspects of the opioid epidemic by addressing clinical opportunities and engaging consumers, prescribers and pharmacies across the entire care continuum and/or life count. The program consists of prevention and education, daily quantity limits specific to each covered opioid drug and prior authorization requirements for certain prescribing situations.

- **Safety Management**

This is a retrospective DUR program that delivers prescription savings by targeting unsafe and clinically inappropriate therapy utilization. Advanced analytics conduct medication evaluation of every claim for all Members to alert physicians to potentially severe drug therapy issues.

- **Retrospective Gaps in Care**

The retrospective DUR program delivers incremental health care savings by closing gaps in medication therapy for treating chronic disease. Advanced analytics conduct medication evaluation of every claim to alert physicians to potential gaps in care.

- **Medication Adherence Program**

The medication adherence program leverages analytics and timely interventions to improve adherence. It supports outreach to the right Members at the right time using the right approach: Identification of Members who are at risk of poor adherence such as low-adherence rates and providing targeted timely interventions such as physician notifications.

- **Specialty Medical Benefit Management**

The specialty medical benefit management suite includes prior authorization, site of care steerage and channel management for drugs that are administered by a health care provider and billed under the medical benefit. The prior authorization component seeks to apply consistency under the medical and pharmacy benefit, in prior authorization of certain Specialty Drugs across the benefit spectrum. The prior authorization process is also used to steer Members on certain specialty drugs to appropriate, lower-cost sites of care such as infusion centers or the Member's home. The program also works to steer certain self-administered Specialty Drugs from the provider setting to the pharmacy benefit.