LOT MAP

BZA-Z VARIANCE APPROVALS (4-16-19)
LOTS 5, 6, & 19: 0' SIDE SETBACK
LOTS 6-11 & 14-19: 8' REAR SETBACK
LOTS 1-5 & 12-13: 0' REAR SETBACK
LOTS 2-19: LOT OCCUPANCY OVER 50%
APPROVAL TO CONSTRUCT 7 ATTACHED
DWELLING UNITS IN A ROW

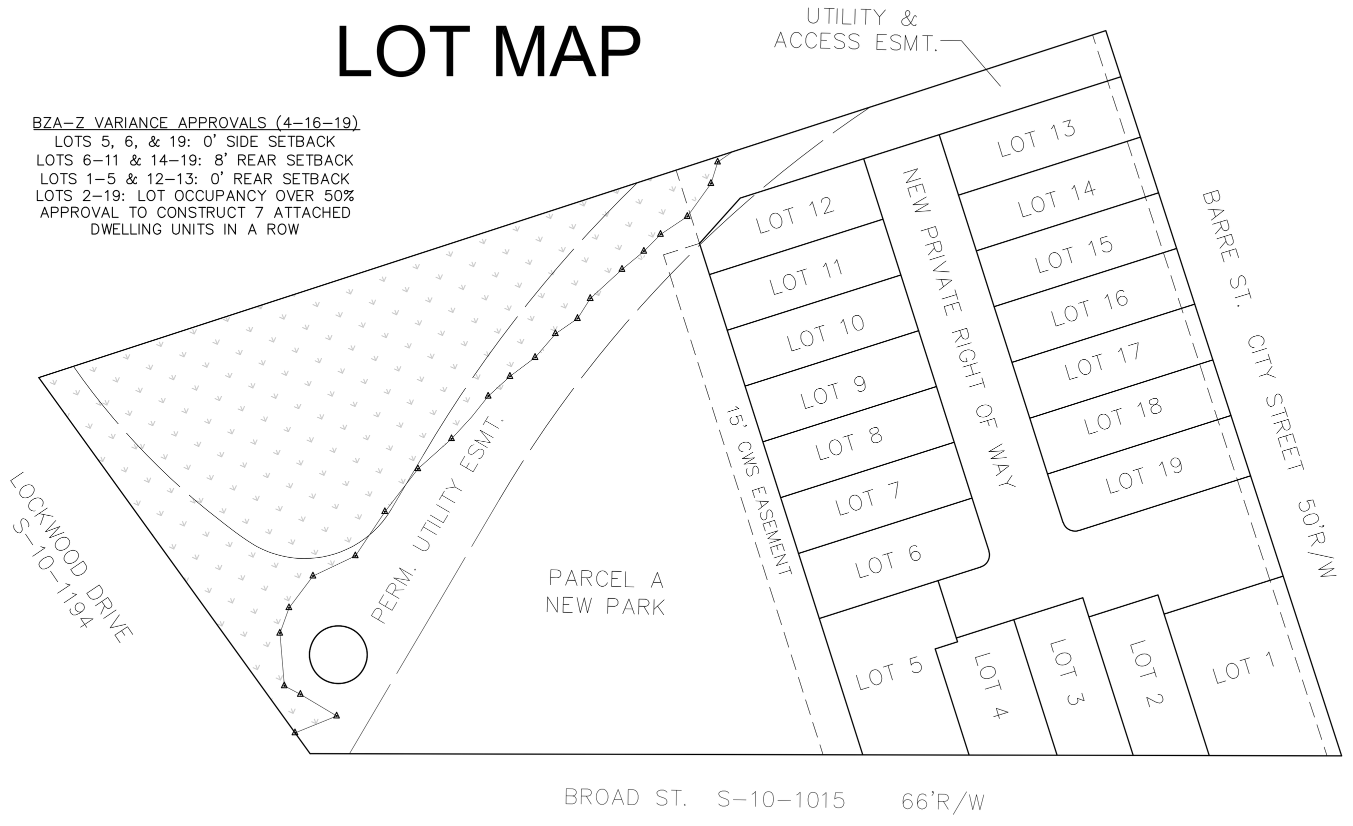

LAND USE TABLE:

TOTAL SITE AREA = 97,966.44 SF (2.249 AC)

TOTAL BUILDING SQUARE FOOTAGE = 24,220 SF (0.56AC.)
24,220 SF / 97,966 SF = 0.247 OR 25% OCCUPIED

TIOTAL HIGHLAND AREA = 78,359 SF (1.799 AC)
TOTAL BUILDING SQUARE FOOTAGE = 24,220 SF (0.56AC.)
24,220 SF / 78,359 SF = 0.309 OR 31% OCCUPIED

PARCEL 'A' (PARK PARCEL) = 1.20 ACRES
CRITICAL AREA = 0.45 ACRES
TOTAL HIGHLAND PARK AREA = 0.75 ACRES

SMALLEST NEW RESIDENTIAL LOT: 1,681 SQ.FT. (0.039 AC.)

LARGEST NEW RESIDENTIAL LOT: 3,337 SQ.FT. (0.077 AC.)

NEW PRIVATE ALLEY: 9,615 SQ.FT. (0.221 AC.)

LOTS 1-19: 36,081 SQ.FT. (0.828 AC.)

LOT NUMBER	LOT AREA	BUILDING FOOTPRINT	LOT COVERAGE
1	3,337 SF	1,518 SF	45%
2	1,793 SF	1,480 SF	83%
3	1,757 SF	1,483 SF	84%
4	1,686 SF	1,349 SF	80%
5	2,778 SF	1,706 SF	61%
6	1,958 SF	1,230 SF	63%
7	1,681 SF	1,185 SF	70%
8	1,681 SF	1,185 SF	70%
9	1,681 SF	1,185 SF	70%
10	1,681 SF	1,185 SF	70%
11	1,681 SF	1,185 SF	70%
12	1,694 SF	1,239 SF	73%
13	1,907 SF	1,239 SF	65%
14	1,763 SF	1,185 SF	67%
15	1,766 SF	1,185 SF	67%
16	1,769 SF	1,185 SF	67%
17	1,772 SF	1,185 SF	67%
18	1,775 SF	1,185 SF	67%
19	1,921 SF	1,230 SF	64%

ST. MARY'S TOWNHOMES - SUBDIVISION CONCEPT PLAN

BROAD STREET
CITY OF CHARLESTON, SOUTH CAROLINA
CITY OF CHARLESTON TRC PROJECT No. TRC-SUB2019-000113

BMP MAINTENANCE REQUIREMENTS:

THE OWNER IS RESPONSIBLE TO PERMANENT LONG-TERM MAINTENANCE. SEE CONSTRUCTION DETAILS FOR BMP MAINTENANCE REQUIREMENTS AND REFER TO COVENANTS FOR PERMANENT MAINTENANCE OF STORMWATER FACILITES (CPMSF).

PERMANENT MAINTENANCE:
INLET BOXES: INLET BOXES TO BE INSPECTED ONCE A YEAR AND TO BE CLEANED IF SEDIMENT TRAP IS HALF FULL.

PAVERS: PERVIOUS PAVERS TO BE VACUUMED ANNUALLY TO REMOVED SEDIMENTS. SEE CPMSF EXHIBIT B

LANDSCAPING: KEEP GRASS MOWED AND LANDSCAPE AREAS FREE OF DEBRIS AND TRASH.

UNDERDRAIN: OWNER TO HAVE AN ENGINEER OR A CERTIFEID SWPPP INSPECTOR ANNUALLY INSPECT THE UNDERDRAINS TO DETERMINE IF CLEANING IS NECESSARY.

CITY OF CHARLESTON ENGINEERING NOTES

ANY MAJOR CHANGES TO THE APPROVED CONSTRUCTION DRAWINGS, WITHIN PUBLIC RIGHT-OF-WAY AND PRIVATE PROPERTY THAT ARE SPECIFIC TO AN APPROVED DETAIL AND/OR CODE MUST BE SUBMITTED FOR CONSIDERATION TO THE ENGINEERING DIVISION BY THE ENGINEER OF RECORD AND/OR THE PROFESSIONAL WHOSE REGISTRATION STAMP AND SIGNATURE APPEARS ON THE PLANS. THE ENGINEERING DIVISION WILL CONSIDER THE REQUEST AND DETERMINE IF ADDITIONAL TRC REVIEW IS WARRANTED.

ANY FIELD CHANGES WITHIN THE SCDOT RIGHT-OF-WAY OR CHANGES THAT WOULD IMPACT SCDOT RIGHT-OF-WAY WILL REQUIRE WRITTEN SCDOT APPROVAL PRIOR THE CHANGES BEING IMPLEMENTED IN THE FIELD.

ALL RIGHT-OF-WAY AND DRAINAGE EASEMENT CONSTRUCTION SHALL MEET SCDOT STANDARD SPECIFICATIONS UNLESS SPECIFIED ELSEWHERE AND APPROVED IN WRITING BY THE ENGINEERING DIVISION.

ALL LOTS WITHIN THE DEVELOPMENT SHALL BE FILLED AND HAVE POSITIVE DRAINAGE TO THE APPROPRIATE EASEMENT(S) OR RIGHT(S)-OF-WAY AS APPROVED ON THE PLANS PRIOR TO THE ISSUANCE OF ANY BUILDING PERMITS OR FINAL ACCEPTANCE OF THE RIGHT-OF-WAY BY THE CITY.

A COMPLETE SET OF APPROVED DRAWINGS AND SPECIFICATIONS MUST BE MAINTAINED ON SITE AT ALL TIMES THAT THE CONTRACTOR IS PERFORMING WORK. THESE DRAWINGS SHALL BE MADE AVAILABLE TO THE CITY OF CHARLESTON PERSONNEL AT THEIR REQUEST.

ANY DAMAGE TO EXISTING PAVEMENT SIDEWALK AND OTHER RIGHT-OF-WAY ELEMENTS MUST BE REPAIRED AT CONTRACTOR'S EXPENSE AND TO THE SATISFACTION OF THE ENGINEERING DIVISION.

DAMAGE CAUSED TO EXISTING UTILITIES BY THE CONTRACTOR SHALL BE REPAIRED BY THE CONTRACTOR AT THE CONTRACTOR'S EXPENSE. ADDITIONALLY, THE CONTRACTOR SHALL CONFIRM THE CONNECTION POINTS OF NEW UTILITIES TO EXISTING UTILITIES PRIOR TO BEGINNING NEW CONSTRUCTION.

ALL DEVELOPMENTS SHALL BE DESIGNED TO HAVE POSITIVE DRAINAGE TO THE APPROPRIATE EASEMENT(S) OR RIGHT(S)-OF-WAY AS APPROVED ON THE PLANS PRIOR TO THE ISSUANCE OF ANY BUILDING PERMITS OR FINAL ACCEPTANCE OF THE RIGHT-OF-WAYS BY THE CITY.

WHERE FIELD INSPECTIONS ARE REQUIRED BY THE CITY, THE CONTRACTOR SHALL NOTIFY THE ENGINEERING DIVISION A MINIMUM OF 24 HOURS IN ADVANCE TO SCHEDULE SUCH INSPECTIONS.

THE CONTRACTOR IS RESPONSIBLE FOR OBTAINING ALL CONSTRUCTION PERMITS NECESSARY FROM OTHER RESPONSIBLE AGENCIES. THIS INCLUDES ANY CITY OF CHARLESTON EXCAVATION PERMITS THAT MAY BE REQUIRED FOR CONSTRUCTION IN EXISTING PUBLIC RIGHT-OF-WAYS.

ALL TEMPORARY ACCESSES TO THE PROJECT SITE MUST BE CONSTRUCTED AS SHOWN ON PLANS AND MAINTAINED PROPERLY AS REQUIRED BY THE APPROVED SWPPP.

ALL SIDEWALK CLOSINGS REQUIRE A SIDEWALK BLOCKING PERMIT FROM THE ENGINEERING DIVISION.

ALL STREET CLOSURES REQUIRE A STREET BLOCKING PERMIT FROM THE DEPARTMENT OF TRAFFIC AND TRANSPORTATION.

ALL EXISTING ROAD SHALL BE CLEANED UP AND RESTORED DAILY.

ALL DRAINAGE THAT IS PART OF THE DEVELOPMENT SHALL BE MADE FUNCTIONAL ON A DAILY BASIS AS WORK PROGRESSES.

THE BURNING OF VEGETATIVE CLEARING DEBRIS IS PROHIBITED IN THE CITY OF CHARLESTON.

STREET LIGHT NOTES:

1) ALL PROPOSED STREET LIGHTING REQUIRES AN APPROVED AND SIGNED LIGHTING PLAN FROM DOMINION ENERGY PRIOR TO ANY ASSOCIATED LIGHTING CONDUIT INSTALLATION. CONTRACTOR IS RESPONSIBLE FOR INSTALLING ALL CONDUIT IN ACCORDANCE WITH DOMINION ENERGY SPECIFICATIONS.

2) ALL CONDUIT MUST BE INSPECTED BY THE PROPER LIGHTING OFFICIALS FROM DOMINION ENERGY BEFORE CONDUIT IS BURIED. CONTRACTOR IS RESPONSIBLE FOR VERIFYING CONDUIT IS INSTALLED ACCORDING TO DOMINION ENERGY STANDARDS.

3) ALL STREET LIGHT POLE FOOTINGS SHALL BE STAKED OUT IN THE FIELD AND APPROVED BY THE DEPARTMENT OF PARKS PRIOR TO INSTALLATION. CONTRACTOR SHALL BE RESPONSIBLE FOR ANY POLE LOCATIONS THAT ARE NOT PREVIOUSLY APPROVED.

OWNER:
THE BEACH COMPANY
Contact: DAN DOYLE
211 KING ST., SUITE 300
CHARLESTON, SC 29401
843-277-3020

ARCHITECTS:
ANTUNOVICH ASSOCIATES
224 WEST HURON STREET, SUITE 7E
CHICAGO, ILLINOIS 60654

CIVIL ENGINEER:
FORSBERG ENGINEERING & SURVEYING INC.
1585 SAVANNAH HIGHWAY
SUITE B
CHARLESTON, SC 29407

LANDSCAPE ARCHITECTS:
DESIGN WORKS
205 1/2 KING STREET
CHARLESTON, SC 29401

CONSIDERABLE EFFORT HAS BEEN MADE TO DETERMINE THE LOCATION OF UNDERGROUND UTILITIES. SOME LOCATIONS ARE ACTUAL FIELD MEASUREMENTS AND SOME ARE TAKEN FROM UTILITY RECORDS. THIS PLAN DOES NOT WARRANT THAT UTILITIES ARE SHOWN ACCURATELY NOR THAT ALL UTILITIES ARE SHOWN. THE CONTRACTOR SHALL BE RESPONSIBLE FOR DETERMINING THE EXACT LOCATION OF ALL UTILITIES PRIOR TO BEGINNING DIGGING OPERATIONS. CALL PALMETTO UTILITIES PROTECTION SERVICE AT 1-888-721-7877 A MINIMUM OF 3 WORKING DAYS BEFORE DIGGING. ANY UTILITIES UTILITIES DAMAGED OR DISTURBED DURING CONSTRUCTION SHALL BE RESTORED TO THEIR ORIGINAL CONDITION AT THE CONTRACTOR'S EXPENSE. ADDITIONALLY, THE CONTRACTOR SHALL CONFIRM THE CONNECTION POINTS OF NEW UTILITIES TO EXISTING UTILITIES PRIOR TO BEGINNING NEW CONSTRUCTION.

South Carolina 811
Call 811 Before You Dig

TRAFFIC CONTROL PLAN NOTES:

1) IF TRAFFIC SIGNS OR MARKINGS WITHIN THE RIGHT OF WAY ARE IMPACTED, SHOW EXISTING AND PROPOSED RELOCATIONS. RELOCATION OF THESE ITEMS MUST BE COORDINATED WITH TRAFFIC AND TRANSPORTATION PRIOR TO CONSTRUCTION.

2) IF THE STREET IS BLOCKED OR IMPACTED DURING CONSTRUCTION AT ANY TIME FOR ANY REASON A STREET BLOCKING PERMIT WILL BE REQUIRED. NO CONSTRUCTION PARKING OR STAGING WIL BE PERMITTED WITHIN THE RIGHT OF WAY WITHOUT PRIOR AUTHORIZATION BY TRAFFIC AND TRANSPORTATION.

3) LANE CLOSURES WITHIN THE PUBLIC RIGHT OF WAY OF ANY TYPE OR DURATION MUST BE APPROVED BY TRAFFIC AND TRANSPORTATION WELL IN ADVANCE OF THE OCCURENCE. NO CONSTRUCTION PARKING OR STAGING WILL BE ALLOWED WITHIN THE RIGHT OF WAY WITHOUT PRIOR APPROVAL BY TRAFFIC AND TRANSPORTATION.

4) ALL TRAFFIC CONTROL DEVICES WILL BE MUTCD STANDARDS (MANUAL OF UNIFORM TRAFFIC CONTROL DEVICES). SIGHT DISTANCE VISIBILITY AT ALL INTERSECTIONS WILL BE MAINTAINED IN ACCORDANCE WITH SCDOT'S, ACCESS AND ROAD MANAGEMENT STANDARDS MANUAL.

5) REMOVAL OR CHANGES TO ON-STREET PARKING MUST BE COORDINATED WITH TRAFFIC AND TRANSPRTATION.

6) THE CONTRACTOR SHALL OBTAIN BOTH AN ENGINEERING PERMIT AND A STREET BLOCKING PERMIT FROM THE CITY OF CHARLESTON FOR LANE CLOSURE ALONG HANOVER STREET.

7) SIGHT DISTANCE VISIBILITY AT ALL EXITS AND INTERSECTIONS WILL BE MAINTAINED IN ACCORDANCE WITH SCDOT'S ACCESS AND ROADSIDE MANAGEMENT STANDARDS MANUAL.

8) ALL SIDEWALKS, WALKWAYS AND CROSSWALKS MUST MAINTAIN NO GREATER THAN 2% CROSS SLOPE FOR A MINIMUM OF 3' WIDTH THROUGH ALL DRIVEWAY SURFACES.

9) CONSTRUCTION AND DEMOLITION TRAFFIC MUST AVOID RESIDENTIAL STREETS AT ALL TIMES UNLESS THERE ARE NO ALTERNATIVE ROUTES. IF IMPACTS ARE ANTICIPATED, THE CONTRACTOR SHOULD CALL TRAFFIC AND TRANSPORTATION PRIOR TO USING THE ROUTE.

10) SEE SHEET C604 FOR TRAFFIC CONTROL DETAILS

SPECIAL SCDOT NOTE:

ANY REVIEW OF INFORMATION ASSOCIATED WITH THE APPLICATION FOR THIS PROJECT BY THE SOUTH CAROLINA DEPARTMENT OF TRANSPORTATION (SCDOT) IS COMPLETED FOR CONFORMANCE WITH GENERALLY ACCEPTED POLICIES AND STANDARDS. THE SCDOT REVIEWS DO NOT IN ANY WAY ABSOLVE THE PERMITTEE OF THE RESPONSIBILITY FOR PROVIDING COMPLETE AND ACCURATE CONSTRUCTION DOCUMENTS AND PRACTICING PROPER CONSTRUCTION PRACTICES. REVIEW AND SUBSEQUENT APPROVAL OF THIS PROJECT BY THE SCDOT DOES NOT ESTABLISH ANY LIABILITY BY THE DEPARTMENT FOR ERRORS OR OMISSIONS IDENTIFIED AT A LATER DATE. IF AT ANY TIME THE PERMITTED PROJECT IS FOUND TO BE DELINQUENT IN STANDARD OR PERFORMANCE THE PERMITTEE WILL BE RESPONSIBLE FOR TAKING ALL NECESSARY STEPS TO CORRECT ISSUES TO THE SATISFACTION OF THE SCDOT.

SCDOT INSPECTOR:

THE PERMITTEE MUST PROVIDE AN ON-SITE INSPECTOR THAT IS CERTIFIED IN ALL DISCIPLINES OF ROAD CONSTRUCTION - EARTHWORK, DRAINAGE, ASPHALT, AND CONCRETE. SCDOT WILL NOT PROVIDE INSPECTORS FOR THIS PROJECT. YOU MUST PRESENT 3rd PARTY INSPECTOR'S CREDENTIALS PRIOR TO ANY WORKING BEGINNING IN THE ROW.

SPECIAL R/W NOTES FOR SCDOT PROJECTS:

1) CONTRACTOR TO REFER TO THE MOST CURRENT EDITION OF THE SCDOT STANDARD DRAWINGS TO MAKE SURE THAT THE DETAILS SHOWN HEREON ARE THE MOST CURRENT SCDOT DETAILS. SEE SHEET C603 FOR SCDOT STANDARD DETAILS.

2) ANY FIELD CHANGES WITHIN SCDOT R/W OR CHANGES THAT WOULD IMPACT SCDOT R/W WILL REQUIRE WRITTEN SCDOT APPROVAL PRIOR TO CHANGES BEING IMPLEMENTED IN THE FIELD."(E.G. DRAINAGE, GRADING, ACCESS DESIGN ETC.).

3) SCDOT WILL REQUIRE THAT YOU PROVIDE A TRAFFIC CONTROL PLAN (PHASED AS NECESSARY) FOR REVIEW AND APPROVAL. SEE TRAFFIC CONTROL DETAILS ON SHEET C603.

4) UTILITY COMPANIES MUST SUBMIT UTILITY ENCROACHMENTS UNDER SEPARATE PERMITS FOR NEW CONNECTIONS OR RELOCATION OF EXISTING SERVICES. NO UTILITY WORK CAN BEGIN WITHIN THE R/W WITHOUT AN APPROVED SCDOT ENCROACHMENT PERMIT FOR EACH UTILITY. SCDOT WILL NOT ALLOW AN OPEN CUT OF A STATE ROAD IF IT WAS RECENTLY RESURFACED.

5) ALL PIPE INSTALLATIONS WITHIN SCDOT RIGHT OF WAY TO MEET CURRENT SCDOT BACKFILL AND COMPACTIVE STANDARDS (SEE SCDOT STANDARD DRAWINGS SECTION 714-000).

6) THE DETAILS SHOWN ON THIS PLAN ARE FOR REFERENCE ONLY. FULL SIZE DETAILS ARE AVAILABLE ON THE SCDOT WEBPAGE AT http://www.scdot.org/doing/sd_Book.aspx

7) THE OWNER SHALL BE RESPONSIBLE FOR THE MAINTENANCE OF DRIVEWAYS AND OTHER ACCESS POINTS, INCLUDING ANY DRAINAGE STRUCTURES, FOR AREAS WITHIN THE RIGHTS-OF-WAYS OF STATE MAINTAINED FACILITIES IN PERPETUITY. DRIVEWAY ACCESS SHALL BE MAINTAINED FOR INGRESS/EGREES - BLOCKING OF ACCESS WILL NOT BE ALLOWED.

PRE VS POST SUMMARY

Storm Event (yr)	Pre 1.97 Ac (cfs)	Pre Volume 1.97 Ac (cf)	Post 1.97 Ac (cfs)	Post Volume 1.97 Ac (cf)
2	6.84	24,269	6.83	22,211
10	11.23	40,861	11.19	38,269
25	13.04	47,867	12.99	45,121
50	14.66	54,199	14.60	51,329
100	17.00	63,377	16.93	60,341

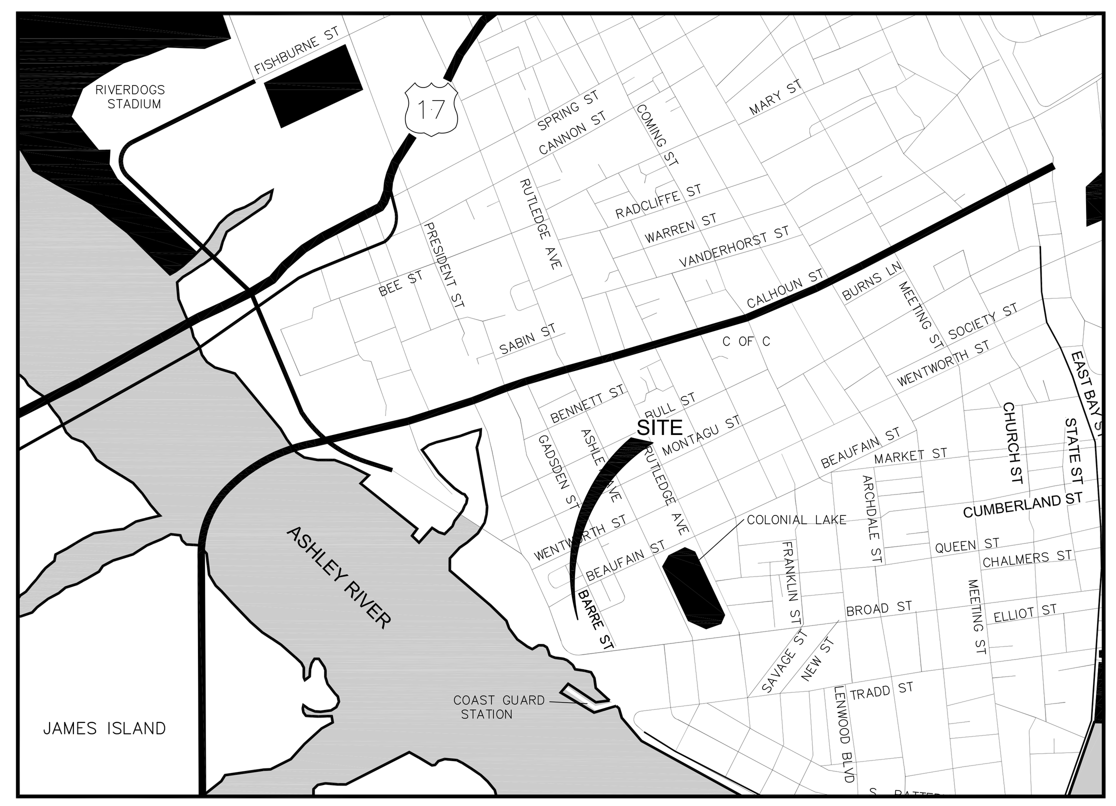

SHEET INDEX:

C001 - TRC TITLE SHEET
C100 - TOPOGRAPHIC SURVEY
C101 - PRELIMINARY SUBDIVISION PLAT
C102 - PRELIMINARY SUBDIVISION PLAT W/ BUILDINGS
C103 - CRITICAL LINE PLAT
C104 - BZA EXHBIT
C105 - SITE PLAN OVER AERIAL
C200 - EROSION CONTROL & DEMOLITION PLAN
C300 - PROPOSED SITE PLAN
C400 - PROPOSED GRADING & DRAINAGE PLAN
C401 - PROPOSED UTILITY PLAN
C500 - SWPPP NOTES AND DETAILS
C501 - SWPPP NOTES AND DETAILS
C502 - CONSTRUCTION DETAILS
C503 - CONSTRUCTION DETAILS
C504 - CONSTRUCTION DETAILS
C505 - CONSTRUCTION DETAILS
C506 - CWS SEWER CONSTRUCTION DETAILS
C507 - CWS WATER CONSTRUCTION DETAILS
C700 - FIRE PROTECTION PLAN
C701 - ADA PLAN

PROJECT NARRATIVE

THE PROJECT IS LOCATED AT 1 BARRE STREET. THE PROJECT COMPLIES WITH THE CITY OF CHARLESTON CENTURY V PLAN BY PRESERVING THE PHYSICAL QUALITIES AND WAY OF LIFE IN RURAL AREAS OF THE CITY. THE PROJECT WILL PROTECT AND IMPROVE THE NATURAL RESOURCES AND MAINTAIN A LUSH, GREEN ENVIRONMENT WITH THE NEW LANDSCAPED PARK THAT WILL OVERLOOK THE HARBOR ACROSS LOCKWOOD DRIVE. THE PROJECT WILL PROVIDE BOTH A QUALITY REDEVELOPMENT INFILL AND ADD A NEW GATHERING PLACE IN A LOCATION THAT WAS NOT PREVIOUSLY USED BY THE PUBLIC.

THE SITE IS SURROUNDED BY RIGHT OF WAYS (LOCKWOOD BLVD TO THE WEST, BROAD STREET TO THE SOUTH, UNIMPROVED CANAL STREET TO THE NORTH, AND BARRE STREET TO THE EAST). THE PARCEL (TMS 457-07-01-030) IS 2.249 ACRES INCLUDING 1.799 ACRES OF HIGHLAND AND 0.450 ACRES OF CRITICAL AREA WHICH WAS CERTIFIED IN JULY OF 2019. THE EXISTING SITE IS CURRENTLY VACANT WITH THE MAJORITY OF IT COMPACTED GRAVEL. THERE ARE A FEW TREES SCATTERED ALONG THE CRITICAL LINE AND THERE IS AN UNDERGROUND SEWER TUNNEL AND SHAFT THAT RUNS DIAGONALLY THROUGH THE PROPERTY WHICH WILL BE AVOIDED. THE PROPOSED PROJECT SITE HAS A DISTURBED AREA OF 1.97 ACRES. THE PROJECT INCLUDES SUBDIVIDING THE PROPERTY INTO A 1.20 ACRE (0.75 ACRES HIGHLAND) CITY PARK AND 19 PRIVATELY OWNED TOWNHOMES THAT WILL BE ACCESSED BY A PRIVATE ALLEY THAT CONNECTS TO BARRE STREET. THE 1.97 ACRE PROJECT SITE IS WITHIN THE PERMITTED 6.6 ACRE DISTURBED LIMITS OF THE ADJACENT SARGENT JASPER PROJECT SO THERE IS A CURRENT CZC AND NPDES PERMIT ON THE PROPERTY. BARRE STREET IMPROVEMENTS INCLUDING THE SIDE WALK AND STREET LIGHTS WERE INCLUDED IN THE PERMITTED SARGENT JASPER PLANS AND WILL BE COORDINATED WITH THIS PROJECT.

THE EXISTING PROJECT SITE IS ADJACENT TO THE NEAREST RECEIVING WATERBODY (THE ADJACENT CRITICAL AREA). THE STORMWATER RUNOFF CURRENTLY FLOWS IN ALL DIRECTIONS FROM THE MIDDLE OF THE SITE. TO THE NORTH AND WEST IT RUNS DIRECTLY INTO CRITICAL AREA AND IT FLOWS INTO BARRE AND BROAD STREETS STORM SYSTEM TO THE SOUTH AND WEST RUNNING UNDER BROAD STREET TO THE CHARLESTON HARBOR. THE SITE IS IN FLOOD ZONE AE-13' AND AE-15' ACCORDING TO FLOOD MAP NUMBER 45019C0514J.

THIS PROJECT WILL USE LOW IMPACT DEVELOPMENT TECHNIQUES TO REDUCE THE STORMWATER DISCHARGE BELOW PRE-DEVELOPMENT RATES. GRAVEL WALKS WILL BE USED FOR SOME OF THE PATHS IN THE CITY PARK, PERVIOUS PAVERS WILL BE USED FOR THE PRIVATE ACCESS DRIVE, AND AN UNDER-DRAIN SYSTEM WITH OUTLET CONTROL WILL BE IMPLEMENTED TO REDUCE THE DISCHARGE INTO THE ADJACENT CRITICAL AREA. A NEW CURB INLET WILL BE INSTALLED ON BROAD STREET TO HELP DRAIN STANDING WATER THAT ACCUMULATES AFTER LARGER STORM EVENTS AND EXTREME TIDES. ADDITIONALLY STORMWATER CHECK VALVES WILL BE INSTALLED INTO STORM PIPES UNDER BROAD STREET AND THE UNDER-DRAIN DISCHARGE PIPE.

SEQUENCE OF CONSTRUCTION

1) IDENTIFY ALL TREES TO BE PROTECTED AND INSTALL TREE BARRICADES AS REQUIRED. CALL ERIC SCHULTZ (CITY OF CHARLESTON) 724-3790 FOR INSPECTION AND APPROVAL. (NONE ON SITE)

2) PLACE SILT FENCING AND CONSTRUCTION ENTRANCE. CALL BRENDA KITTRELL (CITY OF CHARLESTON) 724-3782 FOR INSPECTION AND APPROVAL.

3) CONDUCT PRE-CONSTRUCTION MEETING AS REQUIRED BY SCR100000.

4) CONDUCT INTERIM INSPECTIONS AS REQUIRED BY SCR100000.

5) DEMOLITION, CLEARING AND GRUBBING.

6) ROUGH GRADE, ESTABLISH TEMPORARY DRAINAGE, INSTALL UTILITIES AND STORM DRAINAGE.

7) INSTALL INLET PROTECTION AT STORM INLETS.

8) PAVEMENT/BUILDING CONSTRUCTION

9) FINAL GRADING AND VEGETATIVE STABILIZATION. ALL DISTURBED AREAS NOT PLANTED OR BUILT UPON SHALL BE PERMANENTLY GRASSED.

10) INTERIM AND FINAL INSPECTION BY GOVERNING AGENCIES.

11) REMOVAL OF TEMPORARY EROSION CONTROL STRUCTURES AFTER STABILIZATION.

NOTES AND REFERENCES:

1) THE PROPERTY IS OWNED BY THE BEACH COMPANY.

2) THE TMS IS 457-07-01-030.

3) ZONING SUMMARY:
A) ZONING OF PARCEL - LB-G (LIMITED BUSINESS-GATEWAY OVERLAY)
B) HEIGHT DISTRICT - 3X OR AS PER G-OVERLAY
C) TOTAL AREA OF NEW PARCEL = 2.249 ACRES
HIGHGROUND = 1.806

4) REFERENCE PLAT BY JODIE R. PORTH DATED AUGUST 7, 2003 AND RECORDED IN THE CHARLESTON COUNTY RMC OFFICE IN PLAT BOOK EG PAGE 873.

5) ACCORDING TO FLOOD INSURANCE RATE MAP 45019CO514 J DATED 11/17/04 THIS PROPERTY LIES IN A FLOOD ZONE AE ELEVATION 13 and 15.

6) PLANNING COMMISSION APPROVAL REQUIRED.

ADA NOTES:

1) THE PUBLIC RIGHT OF WAY (BROAD STREET AND BARRE STREET) SHALL REMAIN ADA COMPLIANT DURING CONSTRUCTION.

2) ALL AMENITIES MUST BE ADA COMPLIANT: USPS SERVICE, PATHS, WALKWAYS

CONSTRUCTION TRAFFIC ROUTE:

MAIN CONSTRUCTION EGRESS/INGRESS SHALL BE BARRE STREET ONTO BROAD STREET.

ALL CONSTRUCTION TRAFFIC SHALL TRAVEL TO SITE SOUTH ON LOCKWOOD BOULEVARD THEN CONTINUING EAST ON BROAD STREET. ALL CONSTRUCTION TRAFFIC SHALL EXIT SITE BY TRAVELING WEST ON BROAD STREET AND CONTINUING NORTH ON LOCKWOOD BOULEVARD.

TRC INITIATION STEPS FOR CONSTRUCTION ACTIVITIES:

THE SEQUENCE OF CONSTRUCTION MUST BE CONSISTENT WITH THE CITY'S TRC PRE-CONSTRUCTION CONFERENCE REQUIREMENTS. THIS INVOLVES THE FOLLOWING FIRST STEPS IN THE APPROVAL TO INITIATION OF CONSTRUCTION ACTIVITIES PHASE OF THE PROJECT.

1) A MANDATORY CITY OF CHARLESTON TRC PRE-CONSTRUCTION CONFERENCE INCLUDING CITY REPRESENTATIVES, OWNER OR OWNER'S REPRESENTATIVE, PROJECT ENGINEER, AND CONTRACTOR SHALL BE HELD PRIOR TO STARTING ANY WORK ON THE SITE. THIS IS TO OCCUR ONCE ALL TRC APPROVALS HAVE BEEN OBTAINED (AFTER NPDES CGP CERTIFICATION OF COVERAGE ISSUANCE FROM SCDHEC), WHICH IS REQUIRED PRIOR TO INSTALLATION OF ANY SITE IMPROVEMENTS (INCLUDING INITIAL SWP3 CONTROLS AND TREE PROTECTION BARRICADING). STAMPED APPROVED TRC PLANS WILL BE PROVIDED BY THE CITY AT THE TRC PRE-CONSTRUCTION CONFERENCE MEETING. PLEASE ALSO NOTE THE TRC PRE-CONSTRUCTION CONFERENCE DOES NOT NECESSARILY REPLACE ANY NPDES CGP PRE-CONSTRUCTION CONFERENCES.

2) AFTER THE TRC PRE-CONSTRUCTION CONFERENCE MEETING, THE MEETING MINUTES (PRODUCED BY THE APPLICANT) ARE THEN SUBMITTED TO CITY ENGINEERING DIVISION (KATE CAPPS AT 843-720-2536 OR CAPPSK@CHARLESTON-SC.GOV AND NEED APPROVAL BY THE CITY. AFTER APPROVAL OF THE MINUTES BY THE CITY, THE INITIAL SWP3 INSPECTION AND TREE BARRICADE INSPECTIONS CAN BE REQUESTED FROM THE CITY'S DEPARTMENT OF STORMWATER MANAGEMENT AND ZONING DIVISION, RESPECTIVELY.

3) CONTRACTOR SHALL IDENTIFY ALL TREES TO BE PROTECTED AND INSTALL ALL TREE PROTECTION BARRICADING AS INDICATED. INSTALL ALL SITE PERIMETER SEDIMENT CONTROL MEASURES, TEMPORARY CONSTRUCTION ENTRANCE, AND OTHER REQUIRED INITIAL SWP3 CONTROLS.

4) CONTACT CITY ZONING DIVISION (ERIC SCHULTZ AT 843-724-3790 OR SCHULTZE@CHARLESTON-SC.GOV FOR INSPECTION AND APPROVAL OF TREE PROTECTION BARRICADING. SUBMIT A CITY DEPARTMENT OF STORMWATER MANAGEMENT INITIAL SWP3 INSPECTION REQUEST FORM TO THE CITY'S STORMWATER ADMINISTRATIVE ASSISTANT (843-724-3761 OR MITCHELLAN@CHARLESTON-SC.GOV TO REQUEST THE INITIAL SWP3 INSPECTION.

CITY APPROVALS:	MEETING DATE:
CONCEPTUAL BAR:	*
PRELIMINARY BAR:	*
FINAL BAR:	*

STORMWATER DESIGN STANDARDS MANUAL VARIANCES

APPLICABLE SECTION	DESCRIPTION OF VARIANCE	SUBMITTAL DATE	APPROVAL DATE
3.4	WATER QUANTITY REQUIREMENTS	TBD	TBD

COVENANTS FOR PERMANENT MAINTENANCE OF STORMWATER FACILITIES FORM AND AS-BUILT DRAWINGS FOR STORMWATER MANAGEMENT FACILITIES MUST BE COMPLETED IN ACCORDANCE WITH CITY OF CHARLESTON SPECIFICATIONS BEFORE A CERTIFICATE OF OCCUPANCY AND A NOTICE OF TERMINATION OF THE CONSTRUCTION GENERAL PERMIT WILL BE APPROVED.

DOB APPROVAL STAMPS:

FORSBERG ENGINEERING AND SURVEYING, INC.
P.O. BOX 30575 1587 SAVANNAH HIGHWAY SUITE B
CHARLESTON, SOUTH CAROLINA 29417
(843) 571-2622 FAX (843) 571-6780
CIVIL ENGINEERING, LAND SURVEYING
AND LANDSCAPE ARCHITECTURE

No.	Date	Description
	12/19/19	Issue for Pricing Check
	11/22/19	Issue for Permit
	10/11/19	Issue for Design Development
	09/13/19	Issue for 50% Design Development

Submissions & Revisions

Owner
The Beach Company
211 King Street, Suite 300
Charleston, South Carolina 29401
843.722. 2615 (Phone)
843.722.6449 (Fax)

Architect
ANTUNOVICH ASSOCIATES
ARCHITECTURE · PLANNING · INTERIOR DESIGN
224 West Huron Street, Suite 7E
Chicago, Illinois 60610
Main: (312) 266-1126
Fax: (312) 266-7123
www.antunovich.com

Structural Engineer
Britt, Peters & Associates
101 Falls Park Drive
Suite 601
Greenville, SC 29601
864.271.8869

M.E.P. & F.P. Engineers
WMA, a Salas O'Brien Company
815 South Wabash Avenue
Chicago, IL 60605
312.786.4310

Civil Engineer
Forsberg Engineering
1587 Savannah Highway
Charleston, South Carolina 29417
843.571.2622 (Phone)
843.571.6780 (Fax)

No.	Description	Date

Landscape Architect
DesignWorks
205 1/2 King Street
Charleston, South Carolina 29401
843.723.5525

General Contractor
Balfour Beatty Construction
306 Meeting Street, Suite 300
Charleston, South Carolina 29401
843.974.4590

Project Location
ST. MARY'S FIELD
Charleston, South Carolina

Drawing Title
TRC TITLE SHEET

Seal
SOUTH CAROLINA REGISTERED PROFESSIONAL ENGINEER 29925 GADSDEN A LINTON III

Date: 5/21/20
Drawn By: MSJ
Checked By: GAL
Project No: 4280-1

Drawing No.
C001

Copyright 2016

I HEREBY STATE THAT TO THE BEST OF MY KNOWLEDGE, INFORMATION, AND BELIEF, THE SURVEY SHOWN HEREIN WAS MADE IN ACCORDANCE WITH THE REQUIREMENTS OF THE STANDARDS OF PRACTICE MANUAL FOR SURVEYING IN SOUTH CAROLINA, AND MEETS OR EXCEEDS THE REQUIREMENTS AS SPECIFIED THEREIN.

MICHAEL S. JOHNSON R.L.S. No. 26209

NOTES AND REFERENCES

1) THE PROPERTY IS OWNED BY THE BEACH COMPANY.

2) THE TMS IS 457-07-01-030.

3) THE TOTAL AREA IS 2.249 ACRES.

4) REFERENCE PLAT BY JODIE R. PORTH DATED AUGUST 7, 2003 AND RECORDED IN THE CHARLESTON COUNTY RMC OFFICE IN PLAT BOOK EG PAGE 873.

5) ACCORDING TO FLOOD INSURANCE RATE MAP 45019C0514 J DATED 11/17/04 THIS PROPERTY LIES IN A FLOOD ZONE AE ELEVATION 13 AND AE ELEVATION 14.

6) CHARLESTON WATER SYSTEMS IS THE UTILITY PROVIDER FOR WATER AND SEWER FOR THE PARCEL. WATER AND SEWER SERVICES WILL BE PROVIDED TO EACH LOT.

TREE LEGEND

PCON - POPCORN
HB - HACKBERRY
O - OAK
LO - LIVE OAK
P - PALM
BP - BRADFORD PEAR
(D) - DOUBLE
(T) - TRIPLE
CLUS - CLUSTER
- CRAPE MYRTLE

LINE LEGEND

- BURIED WATER LINE
- BURIED TELEPHONE LINE
- BURIED SANITARY SEWER LINE
- OVERHEAD UTILITY LINE
- BURIED ELECTRIC LINE
- R/W LINE
- ADJACENT PROPERTY LINE
- FENCE LINE

LEGEND:

PKS	PK NAIL SET IN ASPHALT
RBS	REBAR SET
IPF	IRON PIPE FOUND
RF	REBAR FOUND
WM	WATER METER
TP	TELEPHONE PEDESTAL
EB	ELECTRIC BOX
SSMH	SANITARY SEWER MANHOLE
BFP	BACK FLOW PREVENTOR
WV	WATER VALVE
SSCO	SANITARY SEWER CLEANOUT
PVC	POLYVINYL CHLORIDE
RCP	REINFORCED CONCRETE PIPE
VPC	VETRIFIED CLAY PIPE
X5.2	EXISTING GROUND ELEVATION
X5.12	EXISTING HARD ELEVATION
	LIGHT POLE
	UTILITY POLE
	FIRE HYDRANT

GRAPHIC SCALE

20 0 20 40

(IN FEET)
1 inch = 20 ft.

DOB APPROVAL STAMPS:

FORSBERG ENGINEERING AND SURVEYING, INC.
P.O. BOX 30575 1587 SAVANNAH HIGHWAY SUITE B
CHARLESTON, SOUTH CAROLINA 29417
(843) 571-2622 FAX (843) 571-6780
CIVIL ENGINEERING, LAND SURVEYING
AND LANDSCAPE ARCHITECTURE

No.	Date	Description
	12/19/19	Issue for Pricing Check
	11/22/19	Issue for Permit
	10/11/19	Issue for Design Development
	09/13/19	Issue for 50% Design Development

Submissions & Revisions

Owner

The Beach Company
211 King Street, Suite 300
Charleston, South Carolina 29401
843.722. 2615 (Phone)
843.722.6449 (Fax)

Architect

ANTUNOVICH ASSOCIATES
ARCHITECTURE · PLANNING · INTERIOR DESIGN
224 West Huron Street, Suite 7E
Chicago, Illinois 60610
Main: (312) 266-1126
Fax: (312) 266-7123
www.antunovich.com

Structural Engineer

Britt, Peters & Associates
101 Falls Park Drive
Suite 601
Greenville, SC 29601
864.271.8869

M.E.P. & F.P. Engineers

WMA, a Salas O'Brien Company
815 South Wabash Avenue
Chicago, IL 60605
312.786.4310

Civil Engineer

Forsberg Engineering
1587 Savannah Highway
Charleston, South Carolina 29417
843.571.2622 (Phone)
843.571.6780 (Fax)

Landscape Architect

DesignWorks
205 1/2 King Street
Charleston, South Carolina 29401
843.723.5525

General Contractor

Balfour Beatty Construction
306 Meeting Street, Suite 300
Charleston, South Carolina 29401
843.974.4590

Project Location

ST. MARY'S FIELD

Charleston, South Carolina

Drawing Title

EXISTING CONDITIONS SURVEY

Seal

SOUTH CAROLINA REGISTERED LAND SURVEYOR 26209 MICHAEL S. JOHNSON

Date:	5/23/20
Drawn By:	MSJ
Checked By:	GAL
Project No:	4280-1

Drawing No.

C100

Copyright 2016

FOR CITY OF CHARLESTON PLANNING AND CHARLESTON COUNTY RMC STAMPS

REFERENCES:

1) PLAT BY F. STEVEN JOHNSON DATED SEPTEMBER 27, 1985 AND RECORDED IN THE CHARLESTON COUNTY RMC OFFICE IN PLAT BOOK BF PAGE 121.

2) PLAT BY G.M. HOWE (CITY ENGINEER) DATED JUNE 28, 1951 AND RECORDED IN THE CHARLESTON COUNTY RMC OFFICE IN BOOK A53 PAGE 189.

3) REFERENCE DEED FOR AN EASEMENT FOR SOUTHERN BELL DATED JANUARY 7, 1987 AND RECORDED IN THE CHARLESTON COUNTY RMC OFFICE IN DEED BOOK F161 PAGE 182.

4) PLAT BY F. STEVEN JOHNSON DATED DECEMBER 16, 1986 AND RECORDED IN THE CHARLESTON COUNTY RMC OFFICE IN DEED BOOK L164 PAGE 501.

5) UNRECORDED "AS-BUILT" SURVEY BY JAMES KELLY DAVIS FOR THE BEACH COMPANY OF SERGENT JASPER APARTMENTS.

6) EASEMENT FROM SERGEANT JASPER, INC. TO SOUTH CAROLINA ELECTRIC & GAS CO. DATED NOVEMBER 27, 1989 AND RECORDED IN THE CHARLESTON COUNTY RMC OFFICE IN DEED BOOK X189 PAGE 382.

7) REFERENCE PLAT BY FORSBERG ENGINEERING AND SURVEYING DATED AUGUST 26, 2010 AND RECORDED IN THE CHARLESTON COUNTY RMC OFFICE IN PLAT BOOK L10 PAGE 264.

8) REFERENCE PLAT BY JOSEPH NEDDLE DATED JUNE 27, 1949 AND RECORDED IN THE CHARLESTON COUNTY RMC OFFICE IN PLAT BOOK G PAGE 78A.

9) REFERENCE DECLARATION OF RESTRICTIONS, EASEMENTS, AND ACCESS AGREEMENT DATED NOVEMBER 10, 2010 AND RECORDED IN THE CHARLESTON COUNTY RMC IN DEED BOOK 0154 PAGE 344.

10) REFERENCE PLAT BY JODIE R. PORTH DATED AUGUST 7, 2003 AND RECORDED IN THE CHARLESTON COUNTY RMC OFFICE IN PLAT BOOK EG PAGE 873.

LAND USE TABLE:

TOTAL SITE AREA = 97,966.44 SF (2.249 AC)

TOTAL BUILDING SQUARE FOOTAGE = 24,220 SF (0.56AC.)
24,220 SF / 97,966 SF = 0.247 OR 25% OCCUPIED

TIOTAL HIGHLAND AREA = 78,359 SF (1.799 AC)
TOTAL BUILDING SQUARE FOOTAGE = 24,220 SF (0.56AC.)
24,220 SF / 78,359 SF = 0.309 OR 31% OCCUPIED

PARCEL 'A' (PARK PARCEL) = 1.20 ACRES
CRITICAL AREA = 0.45 ACRES
TOTAL HIGHLAND PARK AREA = 0.75 ACRES

SMALLEST NEW RESIDENTIAL LOT: 1,681 SQ.FT. (0.039 AC.)

LARGEST NEW RESIDENTIAL LOT: 3,337 SQ.FT. (0.077 AC.)

NEW PRIVATE ALLEY: 9,615 SQ.FT. (0.221 AC.)

LOTS 1–19: 36,081 SQ.FT. (0.828 AC.)

LINE TABLE			LINE TABLE		
LINE	LENGTH	BEARING	LINE	LENGTH	BEARING
L1	17.83	N88°40'51"E	L20	1.56	S02°59'14"W
L2	16.77	N38°27'23"W	L21	8.00	N02°59'14"E
L3	7.23	N41°26'14"W	L22	8.00	N02°59'14"E
L4	21.00	N15°51'16"E	L23	15.00	S87°00'46"E
L5	10.71	N40°21'15"E	L24	0.62	S87°00'00"E
L6	15.80	N57°47'16"E	L25	1.78	S87°00'00"E
L7	18.64	N85°09'32"E	L26	12.43	N61°21'17"E
L8	21.07	N54°24'22"E	L27	0.62	S03°00'00"W
L9	21.51	N58°18'03"E	L28	15.59	N69°11'41"W
L10	17.90	N68°55'38"E	L29	10.63	N76°02'51"E
L11	11.76	N63°07'16"E	L30	9.41	N53°11'32"E
L12	10.57	N59°24'09"E	L31	17.13	N68°07'06"E
L13	11.67	N68°21'10"E	L32	11.25	N70°57'11"E
L14	12.47	N73°42'18"E	L33	9.44	N65°24'43"E
L15	12.98	N03°00'00"E	L34	12.78	N76°53'01"E
L16	5.52	S65°05'11"W	L35	16.11	N56°17'11"E
L17	1.78	S87°00'00"E	L36	8.93	N38°03'49"E
L18	0.62	S03°00'00"W	L37	7.20	N76°05'35"E
L19	9.31	S87°00'46"E			

CURVE TABLE						
CURVE	LENGTH	RADIUS	TAN	CHORD	CH.DIR.	DELTA
C1	7.85	5.00	5.00	7.07	N47°59'14"E	90°00'00"
C2	7.85	5.00	5.00	7.07	S42°00'37"E	89°59'45"

LEGEND:
IPF – IRON PIPE FOUND
LP – LIGHT POLE
PKF – PK NAIL FOUND
PKS – PK NAIL SET
RBF – REBAR FOUND
CYP – CYPRESS TREE
HB – HACKBERRY TREE
O – OAK TREE
(D) – DOUBLE TRUNK TREE
(T) – TRIPLE TRUNK TREE
o – 5/8 REBAR SET

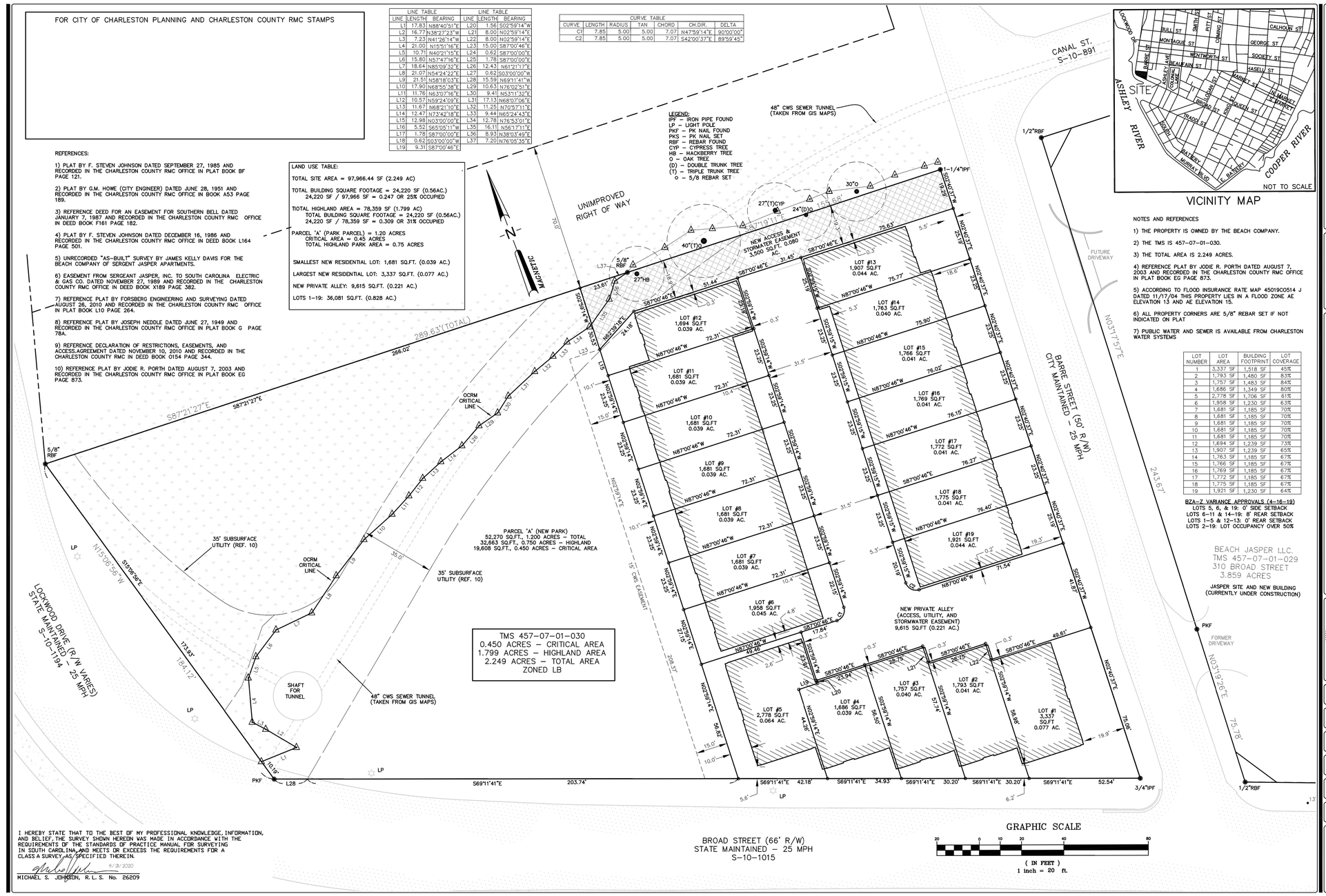

LOT NUMBER	LOT AREA	BUILDING FOOTPRINT	LOT COVERAGE
1	3,337 SF	1,518 SF	45%
2	1,793 SF	1,480 SF	83%
3	1,757 SF	1,483 SF	84%
4	1,686 SF	1,349 SF	80%
5	2,778 SF	1,706 SF	61%
6	1,958 SF	1,230 SF	63%
7	1,681 SF	1,185 SF	70%
8	1,681 SF	1,185 SF	70%
9	1,681 SF	1,185 SF	70%
10	1,681 SF	1,185 SF	70%
11	1,681 SF	1,185 SF	70%
12	1,694 SF	1,239 SF	73%
13	1,907 SF	1,239 SF	65%
14	1,763 SF	1,185 SF	67%
15	1,766 SF	1,185 SF	67%
16	1,769 SF	1,185 SF	67%
17	1,772 SF	1,185 SF	67%
18	1,775 SF	1,185 SF	67%
19	1,921 SF	1,230 SF	64%

BZA–Z VARIANCE APPROVALS (4–16–19)
LOTS 5, 6, & 19: 0' SIDE SETBACK
LOTS 6–11 & 14–19: 8' REAR SETBACK
LOTS 1–5 & 12–13: 0' REAR SETBACK
LOTS 2–19: LOT OCCUPANCY OVER 50%

VICINITY MAP

NOTES AND REFERENCES

1) THE PROPERTY IS OWNED BY THE BEACH COMPANY.

2) THE TMS IS 457–07–01–030.

3) THE TOTAL AREA IS 2.249 ACRES.

4) REFERENCE PLAT BY JODIE R. PORTH DATED AUGUST 7, 2003 AND RECORDED IN THE CHARLESTON COUNTY RMC OFFICE IN PLAT BOOK EG PAGE 873.

5) ACCORDING TO FLOOD INSURANCE RATE MAP 45019C0514 J DATED 11/17/04 THIS PROPERTY LIES IN A FLOOD ZONE AE ELEVATION 13 AND AE ELEVATION 15.

6) ALL PROPERTY CORNERS ARE 5/8" REBAR SET IF NOT INDICATED ON PLAT

7) PUBLIC WATER AND SEWER IS AVAILABLE FROM CHARLESTON WATER SYSTEMS

I HEREBY STATE THAT TO THE BEST OF MY PROFESSIONAL KNOWLEDGE, INFORMATION, AND BELIEF, THE SURVEY SHOWN HEREON WAS MADE IN ACCORDANCE WITH THE REQUIREMENTS OF THE STANDARDS OF PRACTICE MANUAL FOR SURVEYING IN SOUTH CAROLINA, AND MEETS OR EXCEEDS THE REQUIREMENTS FOR A CLASS A SURVEY, AS SPECIFIED THEREIN.

5/31/2020

MICHAEL S. JOHNSON, R.L.S. No. 26209

FORSBERG ENGINEERING AND SURVEYING, INC.
1587 SAVANNAH HIGHWAY SUITE B
P.O. BOX 30575
CHARLESTON, SOUTH CAROLINA 29417
(843) 571-2622 FAX (843) 571-6780
CIVIL ENGINEERING, SURVEYING AND LAND PLANNING

FORSBERG ENGINEERING & SURVEYING, INC. No. C00343 SOUTH CAROLINA STATE CERTIFICATE OF AUTHORIZATION

PRELIMINARY SUBDIVISION PLAT
ST. MARYS FIELD - BEACH COMPANY
BROAD STREET - CITY OF CHARLESTON
CHARLESTON COUNTY, SOUTH CAROLINA

SOUTH CAROLINA REGISTERED LAND SURVEYOR 26209 MICHAEL S. JOHNSON

MICHAEL S. JOHNSON

DATE	FEBRUARY 22, 2019
DRAWN/CHECKED	MSJ/LSM
LAST REVISED	MAY 21, 2020
APPROVED	MSJ
SCALE	1" = 20'
PROJECT NO.	4280-1
SHEET NUMBER	1 OF 1

DOB APPROVAL STAMPS:

FORSBERG ENGINEERING AND SURVEYING, INC.
P.O. BOX 30575 1587 SAVANNAH HIGHWAY SUITE B
CHARLESTON, SOUTH CAROLINA 29417
(843) 571-2622 FAX (843) 571-6780
CIVIL ENGINEERING, SURVEYING AND LAND PLANNING

No.	Date	Description
	12/19/19	Issue for Pricing Check
	11/22/19	Issue for Permit
	10/11/19	Issue for Design Development
	09/13/19	Issue for 50% Design Development

Submissions & Revisions

Owner
The Beach Company
211 King Street, Suite 300
Charleston, South Carolina 29401
843.722.2615 (Phone)
843.722.6449 (Fax)

Architect
ANTUNOVICH ASSOCIATES
224 West Huron Street, Suite 7E
Chicago, Illinois 60610
Main: (312) 266-1126
Fax: (312) 266-7123
www.antunovich.com

Structural Engineer
Britt, Peters & Associates
101 Falls Park Drive
Suite 601
Greenville, SC 29601
864.271.8869

M.E.P. & F.P. Engineers
WMA, a Salas O'Brien Company
815 South Wabash Avenue
Chicago, IL 60605
312.786.4310

Civil Engineer
Forsberg Engineering
1587 Savannah Highway
Charleston, South Carolina 29417
843.571.2622 (Phone)
843.571.6780 (Fax)

Landscape Architect
DesignWorks
205 1/2 King Street
Charleston, South Carolina 29401
843.723.5525

General Contractor
Balfour Beatty Construction
306 Meeting Street, Suite 300
Charleston, South Carolina 29401
843.974.4590

Project Location
ST. MARY'S FIELD
Charleston, South Carolina

Drawing Title
SUBDIVISION PLAT

Seal

SOUTH CAROLINA REGISTERED LAND SURVEYOR 26209 MICHAEL S. JOHNSON

Date:	4/18/20
Drawn By:	MSJ
Checked By:	GAL
Project No:	4280-1

Drawing No.
C101

Copyright 2016

FOR CITY OF CHARLESTON PLANNING AND CHARLESTON COUNTY RMC STAMPS

LINE TABLE			LINE TABLE		
LINE	LENGTH	BEARING	LINE	LENGTH	BEARING
L1	17.83	N88°40'51"E	L20	1.56	S02°59'14"W
L2	16.77	N38°27'27"W	L21	8.00	N02°59'14"E
L3	7.23	N41°26'14"W	L22	8.00	N02°59'14"E
L4	21.00	N15°51'16"E	L23	15.00	S87°00'46"E
L5	10.71	N40°21'15"E	L24	0.62	S87°00'00"E
L6	15.80	N57°47'16"E	L25	1.78	S87°00'00"E
L7	18.64	N85°09'32"E	L26	12.43	N61°21'17"E
L8	21.07	N54°24'22"E	L27	0.62	S03°00'00"W
L9	21.51	N58°18'03"E	L28	15.59	N69°11'41"W
L10	17.90	N68°55'38"E	L29	10.63	N76°02'51"E
L11	11.76	N63°07'16"E	L30	9.41	N53°11'32"E
L12	10.57	N59°24'09"E	L31	17.13	N68°07'06"E
L13	11.67	N68°21'10"E	L32	11.25	N70°57'11"E
L14	12.47	N73°42'18"E	L33	9.44	N65°24'43"E
L15	12.98	N03°00'00"E	L34	12.78	N76°53'01"E
L16	5.52	S65°05'11"W	L35	16.11	N56°17'11"E
L17	1.78	S87°00'00"E	L36	8.93	N38°03'49"E
L18	0.62	S03°00'00"W	L37	7.20	N76°08'35"E
L19	9.31	S87°00'46"E			

CURVE TABLE						
CURVE	LENGTH	RADIUS	TAN	CHORD	CH.DIR.	DELTA
C1	7.85	5.00	5.00	7.07	N47°59'14"E	90°00'00"
C2	7.85	5.00	5.00	7.07	S42°00'37"E	89°59'45"

REFERENCES:

1) PLAT BY F. STEVEN JOHNSON DATED SEPTEMBER 27, 1985 AND RECORDED IN THE CHARLESTON COUNTY RMC OFFICE IN PLAT BOOK BF PAGE 121.

2) PLAT BY G.M. HOWE (CITY ENGINEER) DATED JUNE 28, 1951 AND RECORDED IN THE CHARLESTON COUNTY RMC OFFICE IN BOOK A53 PAGE 189.

3) REFERENCE DEED FOR AN EASEMENT FOR SOUTHERN BELL DATED JANUARY 7, 1987 AND RECORDED IN THE CHARLESTON COUNTY RMC OFFICE IN DEED BOOK F161 PAGE 182.

4) PLAT BY F. STEVEN JOHNSON DATED DECEMBER 16, 1986 AND RECORDED IN THE CHARLESTON COUNTY RMC OFFICE IN DEED BOOK L164 PAGE 501.

5) UNRECORDED "AS-BUILT" SURVEY BY JAMES KELLY DAVIS FOR THE BEACH COMPANY OF SERGENT JASPER APARTMENTS.

6) EASEMENT FROM SERGEANT JASPER, INC. TO SOUTH CAROLINA ELECTRIC & GAS CO. DATED NOVEMBER 27, 1989 AND RECORDED IN THE CHARLESTON COUNTY RMC OFFICE IN DEED BOOK X189 PAGE 382.

7) REFERENCE PLAT BY FORSBERG ENGINEERING AND SURVEYING DATED AUGUST 26, 2010 AND RECORDED IN THE CHARLESTON COUNTY RMC OFFICE IN PLAT BOOK L10 PAGE 264.

8) REFERENCE PLAT BY JOSEPH NEDDLE DATED JUNE 27, 1949 AND RECORDED IN THE CHARLESTON COUNTY RMC OFFICE IN PLAT BOOK G PAGE 78A.

9) REFERENCE DECLARATION OF RESTRICTIONS, EASEMENTS, AND ACCESS AGREEMENT DATED NOVEMBER 10, 2010 AND RECORDED IN THE CHARLESTON COUNTY RMC IN DEED BOOK 0154 PAGE 344.

10) REFERENCE PLAT BY JODIE R. PORTH DATED AUGUST 7, 2003 AND RECORDED IN THE CHARLESTON COUNTY RMC OFFICE IN PLAT BOOK EG PAGE 873.

LAND USE TABLE:

TOTAL SITE AREA = 97,966.44 SF (2.249 AC)

TOTAL BUILDING SQUARE FOOTAGE = 24,220 SF (0.56AC.)
24,220 SF / 97,966 SF = 0.247 OR 25% OCCUPIED

TIOTAL HIGHLAND AREA = 78,359 SF (1.799 AC)
TOTAL BUILDING SQUARE FOOTAGE = 24,220 SF (0.56AC.)
24,220 SF / 78,359 SF = 0.309 OR 31% OCCUPIED

PARCEL 'A' (PARK PARCEL) = 1.20 ACRES
CRITICAL AREA = 0.45 ACRES
TOTAL HIGHLAND PARK AREA = 0.75 ACRES

SMALLEST NEW RESIDENTIAL LOT: 1,681 SQ.FT. (0.039 AC.)

LARGEST NEW RESIDENTIAL LOT: 3,337 SQ.FT. (0.077 AC.)

NEW PRIVATE ALLEY: 9,615 SQ.FT. (0.221 AC.)

LOTS 1–19: 36,081 SQ.FT. (0.828 AC.)

LEGEND:
IPF – IRON PIPE FOUND
LP – LIGHT POLE
PKF – PK NAIL FOUND
PKS – PK NAIL SET
RBF – REBAR FOUND
CYP – CYPRESS TREE
HB – HACKBERRY TREE
O – OAK TREE
(O) – DOUBLE TRUNK TREE
(T) – TRIPLE TRUNK TREE
o – 5/8 REBAR SET

48" CWS SEWER TUNNEL (TAKEN FROM GIS MAPS)

UNIMPROVED RIGHT OF WAY

CANAL ST. S-10-891

ASHLEY RIVER

COOPER RIVER

FUTURE DRIVEWAY

BARRE STREET (50' R/W) CITY MAINTANED – 25 MPH

LOCKWOOD DRIVE (R/W VARIES) STATE MAINTANED – S-10-1194 – 25 MPH

BROAD STREET (66' R/W) STATE MAINTAINED – 25 MPH S-10-1015

OCRM CRITICAL LINE

35' SUBSURFACE UTILITY (REF. 10)

PARCEL 'A' (NEW PARK)
52,270 SQ.FT., 1.200 ACRES – TOTAL
32,663 SQ.FT., 0.750 ACRES – HIGHLAND
19,608 SQ.FT., 0.450 ACRES – CRITICAL AREA

15' CWS EASEMENT

NEW ACCESS & STORMWATER EASEMENT 3,500 SQ.FT. 0.080 AC.

NEW PRIVATE ALLEY (ACCESS, UTILITY, AND STORMWATER EASEMENT) 9,615 SQ.FT (0.221 AC.)

SHAFT FOR TUNNEL

48" CWS SEWER TUNNEL (TAKEN FROM GIS MAPS)

TMS 457-07-01-030
0.450 ACRES – CRITICAL AREA
1.799 ACRES – HIGHLAND AREA
2.249 ACRES – TOTAL AREA
ZONED LB

LOT #1 3,337 SQ.FT 0.077 AC.
LOT #2 1,793 SQ.FT 0.041 AC.
LOT #3 1,757 SQ.FT 0.040 AC.
LOT #4 1,686 SQ.FT 0.039 AC.
LOT #5 2,778 SQ.FT 0.064 AC.
LOT #6 1,905 SQ.FT 0.045 AC.
LOT #7 1,681 SQ.FT 0.039 AC.
LOT #8 1,681 SQ.FT 0.039 AC.
LOT #9 1,681 SQ.FT 0.039 AC.
LOT #10 1,681 SQ.FT 0.039 AC.
LOT #11 1,681 SQ.FT 0.039 AC.
LOT #12 1,694 SQ.FT 0.039 AC.
LOT #13 1,907 SQ.FT 0.044 AC.
LOT #14 1,763 SQ.FT 0.040 AC.
LOT #15 1,766 SQ.FT 0.041 AC.
LOT #16 1,769 SQ.FT 0.041 AC.
LOT #17 1,772 SQ.FT 0.041 AC.
LOT #18 1,775 SQ.FT 0.041 AC.
LOT #19 1,921 SQ.FT 0.044 AC.

BEACH JASPER LLC.
TMS 457-07-01-029
310 BROAD STREET
3.859 ACRES
JASPER SITE AND NEW BUILDING (CURRENTLY UNDER CONSTRUCTION)

I HEREBY STATE THAT TO THE BEST OF MY PROFESSIONAL KNOWLEDGE, INFORMATION, AND BELIEF, THE SURVEY SHOWN HEREON WAS MADE IN ACCORDANCE WITH THE REQUIREMENTS OF THE STANDARDS OF PRACTICE MANUAL FOR SURVEYING IN SOUTH CAROLINA, AND MEETS OR EXCEEDS THE REQUIREMENTS FOR A CLASS A SURVEY, AS SPECIFIED THEREIN.

9/3/2020
MICHAEL S. JOHNSON, R.L.S. No. 26209

GRAPHIC SCALE
20 0 10 20 40 80
(IN FEET)
1 inch = 20 ft.

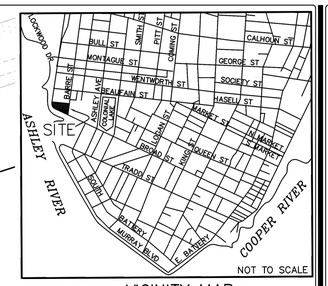

VICINITY MAP
NOT TO SCALE

NOTES AND REFERENCES

1) THE PROPERTY IS OWNED BY THE BEACH COMPANY.

2) THE TMS IS 457-07-01-030.

3) THE TOTAL AREA IS 2.249 ACRES.

4) REFERENCE PLAT BY JODIE R. PORTH DATED AUGUST 7, 2003 AND RECORDED IN THE CHARLESTON COUNTY RMC OFFICE IN PLAT BOOK EG PAGE 873.

5) ACCORDING TO FLOOD INSURANCE RATE MAP 45019C0514 J DATED 11/17/04 THIS PROPERTY LIES IN A FLOOD ZONE AE ELEVATION 13 AND AE ELEVATION 15.

6) ALL PROPERTY CORNERS ARE 5/8" REBAR SET IF NOT INDICATED ON PLAT

7) PUBLIC WATER AND SEWER IS AVAILABLE FROM CHARLESTON WATER SYSTEMS

LOT NUMBER	LOT AREA	BUILDING FOOTPRINT	LOT COVERAGE
1	3,337 SF	1,518 SF	45%
2	1,793 SF	1,480 SF	83%
3	1,757 SF	1,483 SF	84%
4	1,686 SF	1,349 SF	80%
5	2,778 SF	1,706 SF	61%
6	1,958 SF	1,230 SF	63%
7	1,681 SF	1,185 SF	70%
8	1,681 SF	1,185 SF	70%
9	1,681 SF	1,185 SF	70%
10	1,681 SF	1,185 SF	70%
11	1,681 SF	1,185 SF	70%
12	1,694 SF	1,239 SF	73%
13	1,907 SF	1,239 SF	65%
14	1,763 SF	1,185 SF	67%
15	1,766 SF	1,185 SF	67%
16	1,769 SF	1,185 SF	67%
17	1,772 SF	1,185 SF	67%
18	1,775 SF	1,185 SF	67%
19	1,921 SF	1,230 SF	64%

BZA–Z VARIANCE APPROVALS (4–16–19)
LOTS 5, 6, & 19: 0' SIDE SETBACK
LOTS 6–11 & 14–19: 8' REAR SETBACK
LOTS 1–5 & 12–13: 0' REAR SETBACK
LOTS 2–19: LOT OCCUPANCY OVER 50%

PRELIMINARY SUBDIVISION PLAT
ST. MARY'S FIELD - BEACH COMPANY
BROAD STREET - CITY OF CHARLESTON
CHARLESTON COUNTY, SOUTH CAROLINA

MICHAEL S. JOHNSON

DATE
FEBRUARY 22, 2019

DRAWN/CHECKED
MSJ/LSM

LAST REVISED
MAY 21, 2020

APPROVED
MSJ

SCALE
1" = 20'

PROJECT NO.
4280-1

SHEET NUMBER
1
OF 1

FORSBERG ENGINEERING AND SURVEYING, INC.
1587 SAVANNAH HIGHWAY SUITE B
CHARLESTON, SOUTH CAROLINA 29417
(843) 571-2622 FAX (843) 571-6780
CIVIL ENGINEERING • LAND SURVEYING
AND LANDSCAPE ARCHITECTURE

FORSBERG ENGINEERING & SURVEYING, INC. No. C00343
CERTIFICATE OF AUTHORIZATION

DOB APPROVAL STAMPS:

FORSBERG ENGINEERING AND SURVEYING, INC.
P.O. BOX 30575 1587 SAVANNAH HIGHWAY SUITE B
CHARLESTON, SOUTH CAROLINA 29417
(843) 571-2622 FAX (843) 571-6780
CIVIL ENGINEERING • LAND SURVEYING
AND LANDSCAPE ARCHITECTURE

No.	Date	Description
	10/11/19	Issue for Design Development
	09/13/19	Issue for 50% Design Development

Submissions & Revisions

Owner

The Beach Company
211 King Street, Suite 300
Charleston, South Carolina 29401
843.722. 2615 (Phone)
843.722.6449 (Fax)

Architect

ANTUNOVICH ASSOCIATES
224 West Huron Street, Suite 7E
Chicago, Illinois 60610
Main: (312) 266-1126
Fax: (312) 266-7123
www.antunovich.com

Structural Engineer

Britt, Peters & Associates
101 Falls Park Drive
Suite 601
Greenville, SC 29601
864.271.8869

M.E.P. & F.P. Engineers

WMA, a Salas O'Brien Company
815 South Wabash Avenue
Chicago, IL 60605
312.786.4310

Civil Engineer

Forsberg Engineering
1587 Savannah Highway
Charleston, South Carolina 29417
843.571.2622 (Phone)
843.571.6780 (Fax)

No.	Description	Date

Landscape Architect

DesignWorks
205 1/2 King Street
Charleston, South Carolina 29401
843.723.5525

General Contractor

Balfour Beatty Construction
306 Meeting Street, Suite 300
Charleston, South Carolina 29401
843.974.4590

Project Location

ST. MARY'S FIELD
Charleston, South Carolina

Drawing Title

PROPOSED PLAT WITH BUILDINGS

Seal

SOUTH CAROLINA REGISTERED LAND SURVEYOR MICHAEL S. JOHNSON 26209

Date:	4/18/20
Drawn By:	MSJ
Checked By:	GAL
Project No:	4280-1

Drawing No.
C102

Copyright 2016

Parcel Line Table		
Line #	Length	Direction
L1	17.83	S88° 40' 51"W
L2	16.77	N38° 27' 23"W
L3	7.23	N41° 26' 14"W
L4	21.00	N15° 51' 16"E
L5	10.71	N40° 21' 15"E
L6	15.80	N57° 47' 16"E
L7	18.64	N85° 09' 32"E
L8	21.07	N54° 24' 22"E
L9	21.51	N58° 18' 03"E
L10	17.90	N68° 55' 38"E
L11	11.76	N63° 07' 16"E
L12	10.57	N59° 24' 09"E
L13	11.67	N68° 21' 10"E
L14	12.47	N73° 42' 18"E
L15	12.43	N61° 21' 17"E
L16	10.63	N76° 02' 51"E
L17	9.41	N53° 11' 32"E
L18	17.13	N68° 07' 06"E
L19	11.25	N70° 57' 11"E
L20	9.44	N65° 24' 43"E
L21	12.78	N76° 53' 01"E
L22	16.11	N56° 17' 11"E
L23	8.93	N38° 03' 49"E
L24	7.20	N76° 05' 35"E

Parcel Line Table		
Line #	Length	Direction
L25	4.44	N58° 04' 24"E
L26	17.13	N82° 00' 56"E
L27	14.86	N77° 41' 13"E
L28	10.09	S73° 34' 33"E
L29	14.48	S74° 43' 50"E
L30	17.72	N88° 04' 08"E
L31	16.27	S89° 12' 15"E
L32	9.90	N88° 35' 58"E
L33	19.66	S76° 18' 26"E
L34	12.68	N86° 26' 02"E
L35	14.63	S85° 55' 49"E
L36	6.57	S85° 17' 48"E

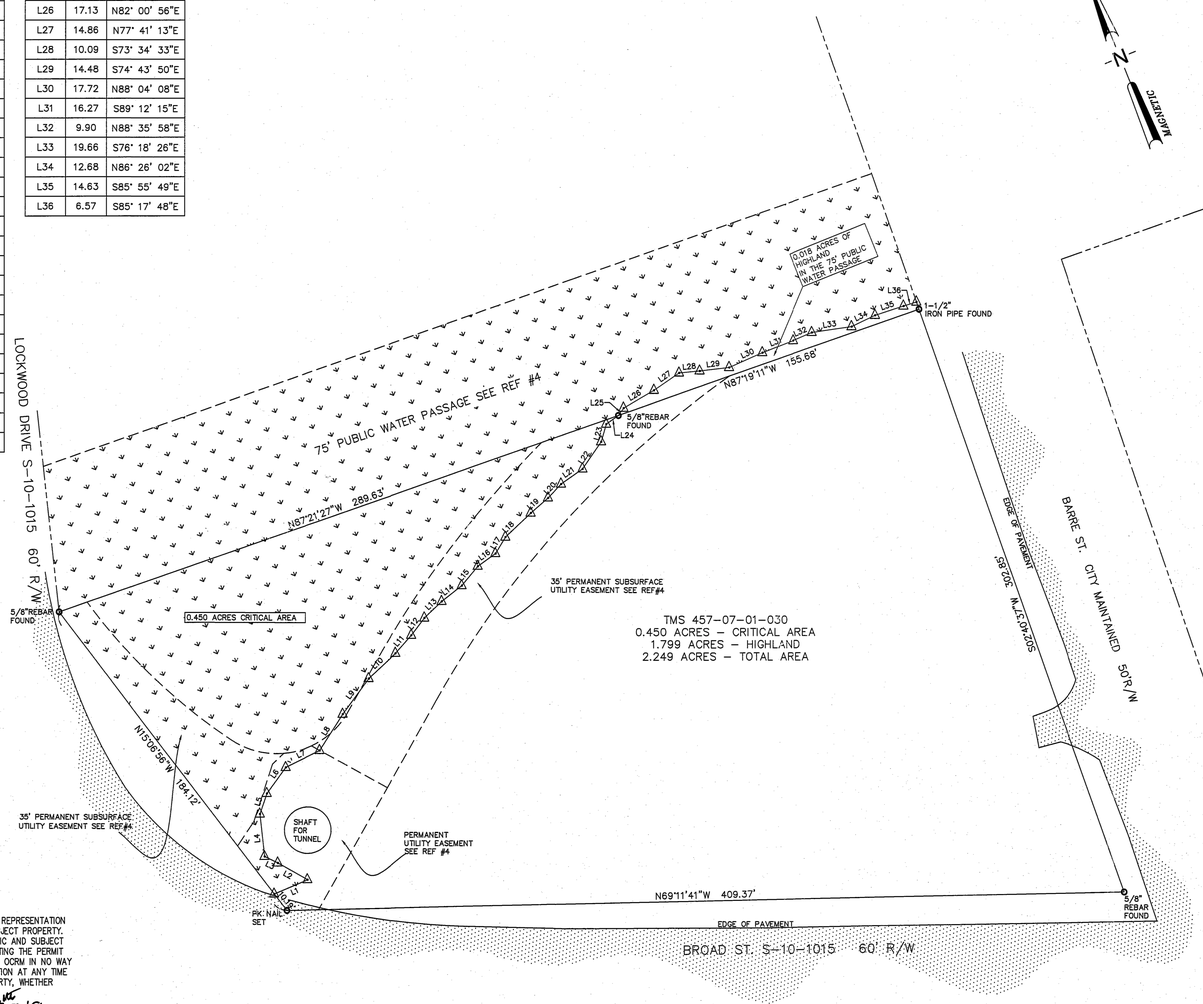

TMS 457-07-01-030
0.450 ACRES – CRITICAL AREA
1.799 ACRES – HIGHLAND
2.249 ACRES – TOTAL AREA

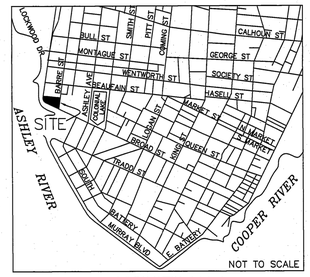

VICINITY MAP

NOTES AND REFERENCES

1) THE PROPERTY IS OWNED BY THE BEACH COMPANY.

2) THE TMS IS 457-07-01-030.

3) THE TOTAL AREA IS 2.249 ACRES.

4) REFERENCE PLAT BY JODIE R. PORTH DATED AUGUST 7, 2003 AND RECORDED IN THE CHARLESTON COUNTY RMC OFFICE IN PLAT BOOK EG PAGE 873.

5) ACCORDING TO FLOOD INSURANCE RATE MAP 45019C0514 J DATED 11/17/04 THIS PROPERTY LIES IN A FLOOD ZONE AE ELEVATION 13 AND AE ELEVATION 14.

6) THE PURPOSE OF THIS SURVEY IS TO CERTIFY THE LOCATION OF THE CRITICAL LINE. THIS SURVEY IS NOT INTENDED TO SHOW THE PHYSICAL IMPROVEMENTS TO THE LOT.

7) REFERENCE PLAT BY GEORGE AZ JOHNSON DATED 11/12/85 AND RECORDED IN THE CHARLESTON COUNTY ROD OFFICE IN PLAT BOOK BU PAGE 138.

THE AREA SHOWN ON THIS PLAT IS A GENERAL REPRESENTATION OF DHEC-OCRM PERMIT AUTHORITY ON THE SUBJECT PROPERTY. CRITICAL AREAS, BY THEIR NATURE, ARE DYNAMIC AND SUBJECT TO CHANGE OVER TIME. BY GENERALLY DELINEATING THE PERMIT AUTHORITY OF THE DHEC-OCRM, THE OFFICE OF OCRM IN NO WAY WAIVES THE RIGHT TO ASSERT PERMIT JURISDICTION AT ANY TIME IN ANY CRITICAL AREA ON THE SUBJECT PROPERTY, WHETHER SHOWN HEREIN OR NOT.

SIGNATURE — DATE 7.29.19

The critical line shown on this plat is valid for five years from the date of this signature, subject to the cautionary language above.

I HEREBY STATE THAT TO THE BEST OF MY PROFESSIONAL KNOWLEDGE,INFORMATION, AND BELIEF,THE SURVEY SHOWN HEREON WAS MADE IN ACCORDANCE WITH THE REQUIREMENTS OF THE STANDARDS OF PRACTICE MANUAL FOR SURVEYING IN SOUTH CAROLINA,AND MEETS OR EXCEEDS THE REQUIREMENTS FOR A CLASS SURVEY AS SPECIFIED THEREIN.

5/23/19

LEWIS SMITH MOORE, P.L.S. No# 21621

GRAPHIC SCALE

30 0 30 60

(IN FEET)
1 inch = 30 ft.

IF SHEET IS LESS THAN (22" X 34") IT IS A REDUCED PRINT, SCALE REDUCED ACCORDINGLY

FORSBERG ENGINEERING AND SURVEYING, INC.
1587 SAVANNAH HIGHWAY SUITE B
P.O. BOX 30573
CHARLESTON, SOUTH CAROLINA 29417
(843) 571-2622 FAX (843) 571-6780
CIVIL ENGINEERING, SURVEYING
AND LANDSCAPE ARCHITECTURE

FORSBERG ENGINEERING & SURVEYING, INC. No. C00343
SOUTH CAROLINA CERTIFICATE OF AUTHORIZATION

CRITICAL LINE SURVEY
THE BEACH CO.
BROAD STREET AND LOCKWOOD DRIVE
CITY OF CHARLESTON CHARLESTON COUNTY, S.C.

SOUTH CAROLINA REGISTERED LAND SURVEYOR 21621 LEWIS SMITH MOORE

LEWIS SMITH MOORE

DATE	MAY 23, 2019
DRAWN/CHECKED	LSM
LAST REVISED	
APPROVED	LSM
SCALE	1"=30'
PROJECT NO.	4280-4
SHEET NUMBER	1
	OF 1

DOB APPROVAL STAMPS:

No.	Date	Description
	12/19/19	Issue for Pricing Check
	11/22/19	Issue for Permit
	10/11/19	Issue for Design Development
	09/13/19	Issue for 50% Design Development

Submissions & Revisions

Owner

The Beach Company
211 King Street, Suite 300
Charleston, South Carolina 29401
843.722.2615 (Phone)
843.722.6449 (Fax)

Architect

ANTUNOVICH ASSOCIATES
224 West Huron Street, Suite 7E
Chicago, Illinois 60610
Main: (312) 266-1126
Fax: (312) 266-7123
www.antunovich.com

Structural Engineer

Britt, Peters & Associates
101 Falls Park Drive
Suite 601
Greenville, SC 29601
864.271.8869

M.E.P. & F.P. Engineers

WMA, a Salas O'Brien Company
815 South Wabash Avenue
Chicago, IL 60605
312.786.4310

Civil Engineer

Forsberg Engineering
1587 Savannah Highway
Charleston, South Carolina 29417
843.571.2622 (Phone)
843.571.6780 (Fax)

No.	Description	Date

Landscape Architect

DesignWorks
205 1/2 King Street
Charleston, South Carolina 29401
843.723.5525

General Contractor

Balfour Beatty Construction
306 Meeting Street, Suite 300
Charleston, South Carolina 29401
843.974.4590

Project Location

ST. MARY'S FIELD
Charleston, South Carolina

Drawing Title

CRITICAL LINE PLAT

Seal

SOUTH CAROLINA REGISTERED LAND SURVEYOR 26209 MICHAEL S. JOHNSON

Date:	4/18/20
Drawn By:	MSJ
Checked By:	GAL
Project No:	4280-1

Drawing No.

C103

Copyright 2016

Board of Zoning Appeals – Zoning
- Results -
City of Charleston

Page 1 of 1

PROPERTY LOCATION, TMS NUMBER(S) AND DESCRIPTION OF REQUEST(S):

BROAD AND BARRE STREETS (HARLESTON VILLAGE) (457-07-01-030)
Request variance from Sec. 54-353(d) to allow construction of attached dwelling units (townhouses) with (Lots 5 and 6) having a 0-ft. side setback; (Lot 19) having a 0-ft. side setback (6-ft. and 3-ft. required).
Request variance from Sec. 54-353 (e) to allow construction of attached dwelling units (townhouses) with (Lots 6 thru 11) and (Lots 14-19) having an 8-ft. rear setback; (Lots 1 thru 5) and (Lots 12 and 13) having a 0-ft. rear setback (16-ft. required).
Request variance from Sec. 54-353 (g) to allow construction of attached dwelling units (townhouses) that exceed the required 50% maximum lot occupancy.
Request variance from Sec. 54-353 (j) to allow construction of (7) attached dwelling units (townhouses) in a continuous row (Ordinance requires that not more than six (6) such dwelling units shall be constructed or attached together in a continuous row).
Zoned LB.

Order on Special Exception Request:

The Board of Zoning Appeals-Zoning held a public hearing to consider the above appeal for a special exception which may be permitted by the Board pursuant to the Zoning Ordinance for the property described above. After consideration of the evidence and arguments presented, the Board makes the following findings of fact and conclusions.

☐ **DENIED.** The Board concludes that the standards in the Section(s) of the Zoning Ordinance listed above, which are applicable to the requested special exception(s), have not been met and therefore orders that the special exception(s) be denied.

☐ **APPROVED.** The Board concludes that the standards in the Section(s) of the Zoning Ordinance listed above, which are applicable to the requested special exception(s), have been met and therefore orders that the special exception(s) be granted, subject to the following conditions, if any: _____

Date issued: _____ Chairman _____

Order on Variance Request:

The Board of Zoning Appeals-Zoning held a public hearing to consider an appeal for a variance from the strict application of the Zoning Ordinance for the property described above. After consideration of the evidence and arguments presented, the Board makes the following findings of facts and conclusions.

☐ **DENIED.** The Board concludes that the requirements for granting a variance have not been met and, therefore, orders that the variance be denied.

☒ **APPROVED.** The Board concludes that:

1. There are extraordinary and exceptional conditions pertaining to the particular piece of property;
2. These conditions do not generally apply to other property in the vicinity;
3. Because of these conditions, the application of the ordinance to the particular piece of property would effectively prohibit or unreasonably restrict the utilization of the property; and
4. Authorization of the variance will not be of substantial detriment to adjacent property or to the public good, and the character of the district will not be harmed by the granting of the variance.

THE BOARD, THEREFORE, finds that the applicant has an unnecessary hardship and orders that the variance be granted, subject to the following conditions, if any: _____

Date issued: 4/16/19 Chairman _____

Approvals of the Board shall remain valid for two (2) years from the approval date, unless extended in accordance with the provisions of Section 54-962. Applicants may not apply for the same request that has been denied by the Board until a period of six (6) months has lapsed.

1/09

EXHIBIT 1

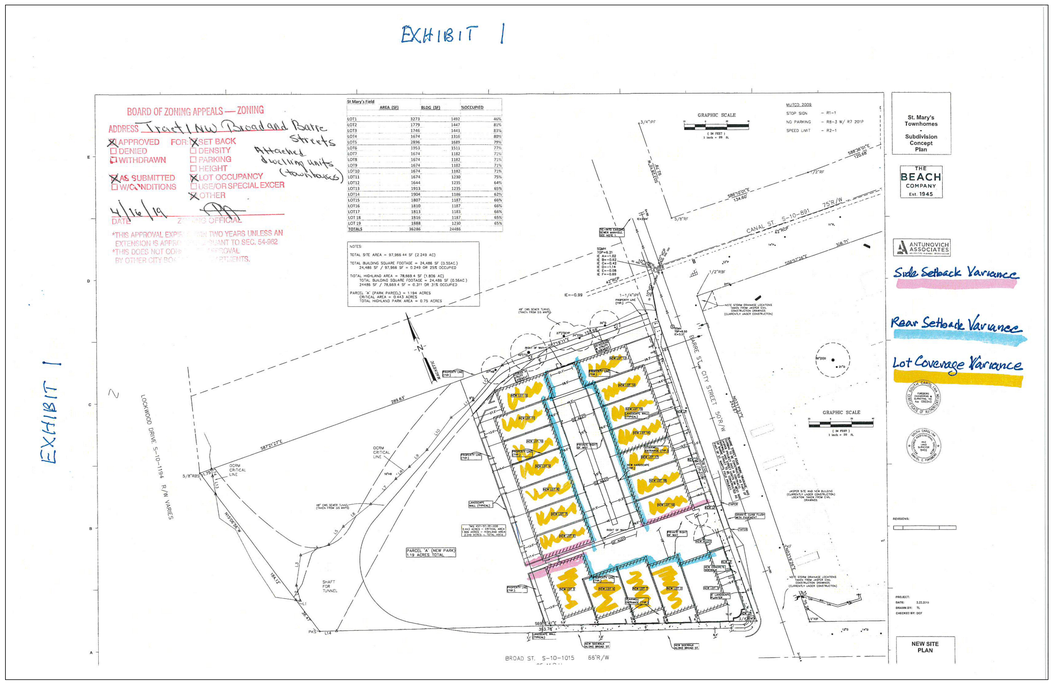

DOB APPROVAL STAMPS:

St. Mary's Townhomes
Subdivision Concept Plan

THE BEACH COMPANY Est. 1845

ANTUNOVICH ASSOCIATES

Side Setback Variance

Rear Setback Variance

Lot Coverage Variance

No.	Date	Description
	12/19/19	Issue for Pricing Check
	11/22/19	Issue for Permit
	10/11/19	Issue for Design Development
	09/13/19	Issue for 50% Design Development

Submissions & Revisions

Owner

The Beach Company
211 King Street, Suite 300
Charleston, South Carolina 29401
843.722. 2615 (Phone)
843.722.6449 (Fax)

Architect

ANTUNOVICH ASSOCIATES
ARCHITECTURE · PLANNING · INTERIOR DESIGN

224 West Huron Street, Suite 7E
Chicago, Illinois 60610
Main: (312) 266-1126
Fax: (312) 266-7123
www.antunovich.com

Structural Engineer

Britt, Peters & Associates
101 Falls Park Drive
Suite 601
Greenville, SC 29601
864.271.8869

M.E.P. & F.P. Engineers

WMA, a Salas O'Brien Company
815 South Wabash Avenue
Chicago, IL 60605
312.786.4310

Civil Engineer

Forsberg Engineering
1587 Savannah Highway
Charleston, South Carolina 29417
843.571.2622 (Phone)
843.571.6780 (Fax)

Landscape Architect

DesignWorks
205 1/2 King Street
Charleston, South Carolina 29401
843.723.5525

General Contractor

Balfour Beatty Construction
306 Meeting Street, Suite 300
Charleston, South Carolina 29401
843.974.4590

Project Location

ST. MARY'S FIELD

Charleston, South Carolina

Drawing Title

BZA EXHIBIT

Seal

SOUTH CAROLINA REGISTERED PROFESSIONAL ENGINEER 29925 JAMES A. LINTON III

Date:	4/18/20
Drawn By:	MSJ
Checked By:	GAL
Project No:	4280-1

Drawing No.

C104

Copyright 2016

DOB APPROVAL STAMPS:

No.	Date	Description
	10/11/19	Issue for Design Development
	09/13/19	Issue for 50% Design Development

Submissions & Revisions

Owner

The Beach Company
211 King Street, Suite 300
Charleston, South Carolina 29401
843.722.2615 (Phone)
843.722.6449 (Fax)

Architect

ANTUNOVICH ASSOCIATES
224 West Huron Street, Suite 7E
Chicago, Illinois 60610
Main: (312) 266-1126
Fax: (312) 266-7123
www.antunovich.com

Structural Engineer

Britt, Peters & Associates
101 Falls Park Drive
Suite 601
Greenville, SC 29601
864.271.8869

M.E.P. & F.P. Engineers

WMA, a Salas O'Brien Company
815 South Wabash Avenue
Chicago, IL 60605
312.786.4310

Civil Engineer

Forsberg Engineering
1587 Savannah Highway
Charleston, South Carolina 29417
843.571.2622 (Phone)
843.571.6780 (Fax)

Landscape Architect

DesignWorks
205 1/2 King Street
Charleston, South Carolina 29401
843.723.5525

General Contractor

Balfour Beatty Construction
306 Meeting Street, Suite 300
Charleston, South Carolina 29401
843.974.4590

Project Location

ST. MARY'S FIELD
Charleston, South Carolina

Drawing Title

SITE PLAN OVER AERIAL

Seal

SOUTH CAROLINA REGISTERED LAND SURVEYOR 26209 MICHAEL O. JOHNSON

Date:	4/18/20
Drawn By:	MSJ
Checked By:	GAL
Project No:	4280-1

Drawing No.

C105

Copyright 2016

SCDHEC NPDES STANDARD NOTES (2012 CGP)

1. IF NECESSARY, SLOPES, WHICH EXCEED EIGHT (8) VERTICAL FEET SHOULD BE STABILIZED WITH SYNTHETIC OR VEGETATIVE MATS, IN ADDITION TO HYDROSEEDING. IT MAY BE NECESSARY TO INSTALL TEMPORARY SLOPE DRAINS DURING CONSTRUCTION. TEMPORARY BERMS MAY BE NEEDED UNTIL THE SLOPE IS BROUGHT TO GRADE.

2. STABILIZATION MEASURES SHALL BE INITIATED AS SOON AS PRACTICABLE IN PORTIONS OF THE SITE WHERE CONSTRUCTION ACTIVITIES HAVE TEMPORARILY OR PERMANENTLY CEASED, BUT IN NO CASE MORE THAN FOURTEEN (14) DAYS AFTER WORK HAS CEASED, EXCEPT AS STATED BELOW.
- WHERE STABILIZATION BY THE 14th DAY IS PRECLUDED BY SNOW COVER OR FROZEN GROUND CONDITIONS STABILIZATION MEASURES MUST BE INITIATED AS SOON AS PRACTICABLE.
- WHERE CONSTRUCTION ACTIVITY ON A PORTION OF THE SITE IS TEMPORARILY CEASED, AND EARTH-DISTURBING ACTIVITIES WILL BE RESUMED WITHIN 14 DAYS, TEMPORARY STABILIZATION MEASURES DO NOT HAVE TO BE INITIATED ON THAT PORTION OF THE SITE.

3. ALL SEDIMENT AND EROSION CONTROL DEVICES SHALL BE INSPECTED ONCE CALENDAR EVERY WEEK. IF PERIODIC INSPECTION OR OTHER INFORMATION INDICATES THAT A BMP HAS BEEN INAPPROPRIATELY, OR INCORRECTLY, THE PERMITTEE MUST ADDRESS THE NECESSARY REPLACEMENT OR MODIFICATION REQUIRED TO CORRECT THE BMP WITHIN 48 HOURS OF IDENTIFICATION.

4. PROVIDE SILT FENCE AND/OR OTHER CONTROL DEVICES, AS MAY BE REQUIRED, TO CONTROL SOIL EROSION DURING UTILITY CONSTRUCTION. ALL DISTURBED AREAS SHALL BE CLEANED, GRADED, AND STABILIZED WITH GRASSING IMMEDIATELY AFTER THE UTILITY INSTALLATION. FILL, COVER, AND TEMPORARY SEEDING AT THE END OF EACH DAY ARE RECOMMENDED. IF WATER IS ENCOUNTERED WHILE TRENCHING, THE WATER SHOULD BE FILTERED TO REMOVE SEDIMENT BEFORE BEING PUMPED BACK INTO ANY WATERS OF THE STATE.

5. ALL EROSION CONTROL DEVICES SHALL BE PROPERLY MAINTAINED DURING ALL PHASES OF CONSTRUCTION UNTIL THE COMPLETION OF ALL CONSTRUCTION ACTIVITIES AND ALL DISTURBED AREAS HAVE BEEN STABILIZED. ADDITIONAL CONTROL DEVICES MAY BE REQUIRED DURING CONSTRUCTION IN ORDER TO CONTROL EROSION AND/OR OFFSITE SEDIMENTATION. ALL TEMPORARY CONTROL DEVICES SHALL BE REMOVED ONCE CONSTRUCTION IS COMPLETE AND THE SITE IS STABILIZED.

6. THE CONTRACTOR MUST TAKE NECESSARY ACTION TO MINIMIZE THE TRACKING OF MUD ONTO PAVED ROADWAY(S) FROM CONSTRUCTION AREAS AND THE GENERATION OF DUST. THE CONTRACTOR SHALL DAILY REMOVE MUD/SOIL FROM PAVEMENT, AS MAY BE REQUIRED.

7. RESIDENTIAL SUBDIVISIONS REQUIRE EROSION CONTROL FEATURES FOR INFRASTRUCTURE AS WELL AS FOR INDIVIDUAL LOT CONSTRUCTION. INDIVIDUAL PROPERTY OWNERS SHALL FOLLOW THESE PLANS DURING CONSTRUCTION OR OBTAIN APPROVAL OF AN INDIVIDUAL PLAN IN ACCORDANCE WITH S.C. REG. 72-300 ET SEQ. AND SCR100000.

8. TEMPORARY DIVERSION BERMS AND/OR DITCHES WILL BE PROVIDED AS NEEDED DURING CONSTRUCTION TO PROTECT WORK AREAS FROM UPSLOPE RUNOFF AND/OR TO DIVERT SEDIMENT-LADEN WATER TO APPROPRIATE TRAPS OR STABLE OUTLETS.

9. ALL WATERS OF THE STATE (WOS), INCLUDING WETLANDS, ARE TO BE FLAGGED OR OTHERWISE CLEARLY MARKED IN THE FIELD. A DOUBLE ROW OF SILT FENCE IS TO BE INSTALLED IN ALL AREAS WHERE A 50-FOOT BUFFER CAN'T BE MAINTAINED BETWEEN THE DISTURBED AREA AND ALL WOS. A 10-FOOT BUFFER SHOULD BE MAINTAINED BETWEEN THE LAST ROW OF SILT FENCE AND ALL WOS.

10. LITTER, CONSTRUCTION DEBRIS, OILS, FUELS, AND BUILDING PRODUCTS WITH SIGNIFICANT POTENTIAL FOR IMPACT (SUCH AS STOCKPILES OF FRESHLY TREATED LUMBER) AND CONSTRUCTION CHEMICALS THAT COULD BE EXPOSED TO STORM WATER MUST BE PREVENTED FROM BECOMING A POLLUTANT SOURCE IN STORM WATER DISCHARGES.

11. A COPY OF THE SWPPP, INSPECTIONS RECORDS, AND RAINFALL DATA MUST BE RETAINED AT THE CONSTRUCTION SITE OR A NEARBY LOCATION EASILY ACCESSIBLE DURING NORMAL BUSINESS HOURS, FROM THE DATE OF COMMENCEMENT OF CONSTRUCTION ACTIVITIES TO THE DATE THAT FINAL STABILIZATION IS REACHED.

12. INITIATE STABILIZATION MEASURES ON ANY EXPOSED STEEP SLOPE (3H:1V OR GREATER) WHERE LAND-DISTURBING ACTIVITIES HAVE PERMANENTLY OR TEMPORARILY CEASED, AND WILL NOT RESUME FOR A PERIOD OF 7 CALENDAR DAYS.

13. MINIMIZE SOIL COMPACTION AND, UNLESS INFEASIBLE, PRESERVE TOPSOIL.

14. MINIMIZE THE DISCHARGE OF POLLUTANTS FROM EQUIPMENT AND VEHICLE WASHING, WHEEL WASH WATER, AND OTHER WASH WATERS. WASH WATERS MUST BE TREATED IN A SEDIMENT BASIN OR ALTERNATIVE CONTROL THAT PROVIDES EQUIVALENT OR BETTER TREATMENT PRIOR TO DISCHARGE;

15. MINIMIZE THE DISCHARGE OF POLLUTANTS FROM DEWATERING OF TRENCHES AND EXCAVATED AREAS. THESE DISCHARGES ARE TO BE ROUTED THROUGH APPROPRIATE BMPs (SEDIMENT BASIN, FILTER BAG, ETC.).

16. THE FOLLOWING DISCHARGES FROM SITES ARE PROHIBITED:
- WASTEWATER FROM WASHOUT OF CONCRETE, UNLESS MANAGED BY AN APPROPRIATE CONTROL;
- WASTEWATER FROM WASHOUT AND CLEANOUT OF STUCCO, PAINT, FORM RELEASE OILS, CURING COMPOUNDS AND OTHER CONSTRUCTION MATERIALS;
- FUELS, OILS, OR OTHER POLLUTANTS USED IN VEHICLE AND EQUIPMENT OPERATION AND MAINTENANCE; AND
- SOAPS OR SOLVENTS USED IN VEHICLE AND EQUIPMENT WASHING.

17. AFTER CONSTRUCTION ACTIVITIES BEGIN, INSPECTIONS MUST BE CONDUCTED AT A MINIMUM OF AT LEAST ONCE EVERY CALENDAR WEEK AND MUST BE CONDUCTED UNTIL FINAL STABILIZATION IS REACHED ON ALL AREAS OF THE CONSTRUCTION SITE.

18. IF EXISTING BMPs NEED TO BE MODIFIED OR IF ADDITIONAL BMPs ARE NECESSARY TO COMPLY WITH THE REQUIREMENTS OF THIS PERMIT AND/OR SC'S WATER QUALITY STANDARDS, IMPLEMENTATION MUST BE COMPLETED BEFORE THE NEXT STORM EVENT WHENEVER PRACTICABLE. IF IMPLEMENTATION BEFORE THE NEXT STORM EVENT IS IMPRACTICABLE, THE SITUATION MUST BE DOCUMENTED IN THE SWPPP AND ALTERNATIVE BMPs MUST BE IMPLEMENTED AS SOON AS REASONABLY POSSIBLE.

19. A PRE-CONSTRUCTION CONFERENCE MUST BE HELD FOR EACH CONSTRUCTION SITE WITH AN APPROVED ON-SITE SWPPP PRIOR TO THE IMPLEMENTATION OF CONSTRUCTION ACTIVITIES. FOR NON-LINEAR PROJECTS THAT DISTURB 10 ACRES OR MORE THIS CONFERENCE MUST BE HELD ON-SITE UNLESS THE DEPARTMENT HAS APPROVED OTHERWISE.

CONSIDERABLE EFFORT HAS BEEN MADE TO DETERMINE THE LOCATION OF UNDERGROUND UTILITIES. SOME LOCATIONS ARE ACTUAL FIELD MEASUREMENTS AND SOME ARE TAKEN FROM UTILITY RECORDS. THIS PLAN DOES NOT WARRANT THAT UTILITIES ARE SHOWN ACCURATELY NOR THAT ALL UTILITIES ARE SHOWN. THE CONTRACTOR SHALL BE RESPONSIBLE FOR DETERMINING THE EXACT LOCATION OF ALL UTILITIES PRIOR TO BEGINNING DIGGING OPERATIONS. CALL PALMETTO UTILITIES PROTECTION SERVICE AT 1-888-721-7877 A MINIMUM OF 3 WORKING DAYS BEFORE DIGGING. ANY UTILITIES UTILITIES DAMAGED OR DISTURBED DURING CONSTRUCTION SHALL BE RESTORED TO THEIR ORIGINAL CONDITION AT THE CONTRACTOR'S EXPENSE. ADDITIONALLY, THE CONTRACTOR SHALL CONFIRM THE CONNECTION POINTS OF NEW UTILITIES TO EXISTING UTILITIES PRIOR TO BEGINNING NEW CONSTRUCTION.

SWPPP NOTES

1) CONTRACTOR TO INSTALL PERIMETER CONTROLS AND CONSTRUCTION ACCESS POINTS.

2) CLEARING, GRUBBING, AND DEMOLITION.

3) ROUGH GRADING AND INSTALLATION OF STORM DRAINAGE LINES AND STRUCTURES.

4) INSTALL SEDIMENT CONTROLS AT ALL STRUCTURES WITHIN 5 DAYS OF STRUCTURE INSTALLATION.

5) PAVING AND FINAL SITE GRADING.

6) LANDSCAPE PLANTING, SODDING, AND GRASSING. SEE GRASSING SCHEDULE.

7) REMOVE ALL TEMPORARY EROSION & SEDIMENT CONTROL BMP FOLLOWING FINAL INSPECTIONS.

8) SUBMIT AS-BUILT SURVEY TO PROJECT ENGINEER AS REQUIRED.

9) PERMANENT MAINTENANCE COVENANTS AND AS-BUILT DRAWINGS FOR STORMWATER FACILITIES IN ACCORDANCE WITH CITY OF CHARLESTON SPECIFICATIONS NEEDS TO BE SUBMITTED AND ACCEPTED BY CITY. CONFIRM MAINTENANCE COVENANTS HAVE BEEN APPROVED AND RECORDED BEFORE N.O.T. IS ISSUED.

DEMOLITION NOTES:

1) SEE EROSION CONTROL NOTES ON SHEET C500.

2) SEE LANDSCAPING PLAN FOR FINAL STABILIZATION.

3) CONTRACTOR IS RESPONSIBLE FOR SETTING ALL NEW AND EXISTING SSMH TOPS, INLET TOPS, FIRE HYDRANTS, VALVES, CLEAN OUTES, & ETC TO FINISHED GRADE. MINOR ADJUSTMENTS MAY BE NECESSARY.

4) ALL DISTURBED AREAS SHALL BE TEMPORARILY STABILIZED IN ACCORDANCE TO GRASSING & SEEDING SCHEDULE ON SHEET C500 AND PERMANENTLY STABILIZED IN ACCORDANCE TO LANDSCAPE PLAN.

5) THE CONTRACTOR WILL BE RESPONSIBLE FOR ALL SWPPP INSPECTIONS, REPORTS, AS-BUILT DRAWINGS, MEETINGS, CERTIFICATIONS, AND NOTICE OF TERMINATION AS REQUIRED BY THE APPROVED NPDES PERMIT FOR STORMWATER DISCHARGE FROM LARGE AND SMALL CONSTRUCTION ACTIVITIES SCR100000 (2012 CGP) AND AS REQUIRED BY CITY OF NORTH CHARLESTON MS4.

6) CONSIDERABLE EFFORT HAS BEEN MADE TO DETERMINE THE LOCATION OF UNDERGROUND UTILITIES. SOME LOCATIONS ARE ACTUAL FIELD MEASUREMENTS AND SOME ARE TAKEN FROM UTILITY RECORDS OR LOCATIONS MARKED IN THE FIELD BY THE VARIOUS UTILITY COMPANIES. THIS SURVEY DOES NOT WARRANT THAT UTILITIES ARE SHOWN ACCURATELY NOR THAT ALL UTILITIES ARE SHOWN. CALL PALMETTO UTILITY PROTECTION SERVICE (P.U.P.S.) AT 811 A MINIMUM OF 3 WORKING DAYS BEFORE DIGGING.

7) LITTER, CONSTRUCTION DEBRIS, CONCRETE WASHOUT, OILS, FUELS AND BUILDING PRODUCTS EXPOSED TO STORMWATER SHALL BE PREVENTED FROM BECOMING A POLLUTANT SOURCE IN STORMWATER DISCHARGES.

8) COORDINATE ALL ELECTRICAL DEMOLITION AND NEW WORK WITH ELECTRICAL PLAN.

9) A CONCRETE WASHOUT IS REQUIRED FOR THIS PROJECT, SEE DETAILS (3/C501). CONTRACTOR TO DETERMINE THE BEST LOCATION FOR THESE ITEMS.

10) ALL CURB AND SIDEWALK DEMOLITION WILL BE AT EXISTING JOINTS. ALL ASPHALT PAVEMENT DEMOLITION WILL BE SAWCUT IN A STRAIGHT LINE.

11) THE CONTRACTOR SHALL ENSURE ALL EXISTING ADA ACCESSIBLE ROUTES WITHIN THE PUBLIC RIGHT OF WAY WILL REMAIN ADA COMPLIANT DURING CONSTRUCTION OR PROVIDE AN ALTERNATIVE ROUTE. CITY OF CHARLESTON ENGINEERING PERMIT AND STREET BLOCKING PERMITS WILL BE THE RESPONSIBILITY OF THE CONTRACTOR.

12) CONTRACTOR SHALL BE RESPONSIBLE FOR OBTAINING A CITY OF CHARLESTON ENCROACHMENT PERMIT AND STREET BLOCKING PERMIT FOR THE WORK IN THE BARRE STREET AND BROAD STREET RIGHT OF WAYS. CONTACT TROY MITCHELL, TRAFFIC OPERATIONS MANAGER AT 843-724-7379 OR MITCHELLT@CHARLESTON-SC.GOV.

13) SAWCUT STRAIGHT EDGE FOR ALL ASPHALT DEMOLITION. ALL SIDEWALK AND CURB DEMOLITION WILL BE TO EXISTING JOINTS.

15) ADDITIONAL PAVEMENT CUT DIMENSIONS CAN BE FOUND ON C400 FOR DRAINAGE AND C500 FOR WATER AND SEWER.

16) CONSTRUCTION DEBRIS AND OTHER WASTE SHALL BE CONTAINED IN A DUMPSTER OR COVERED WITH PLASTIC.

17) CHEMICALS, PAINTS, SOLVENTS AND OTHER MATERIALS SHALL BE STORED SUCH THAT EXPOSURE RISK TO PRECIPITATION AND STORMWATER RUN-ON IS LOW.

18) CONCRETE WASH WATER SHALL BE DISPOSED IN AN AREA OF SOIL AWAY FROM SURFACE WATERS WHERE SOIL CAN ACT AS A FILTER OR EVAPORATE THE WATER. REMAINING CEMENT SHALL BE DISPOSED OF IN A DUMPSTER OR OTHERWISE REMOVED FROM THE SITE.

19) DE-WATERING WATER SHALL BE DISPOSED OF IN A PERVIOUS AREA AND SHALL BE CONTAINED COMPLETELY WITHIN THAT AREA. DISCHARGE OF SEDIMENT FROM DE-WATERING OPERATIONS SHALL BE PREVENTED FROM ENTERING STORMWATER FACILITIES AND SURFACE WATERS.

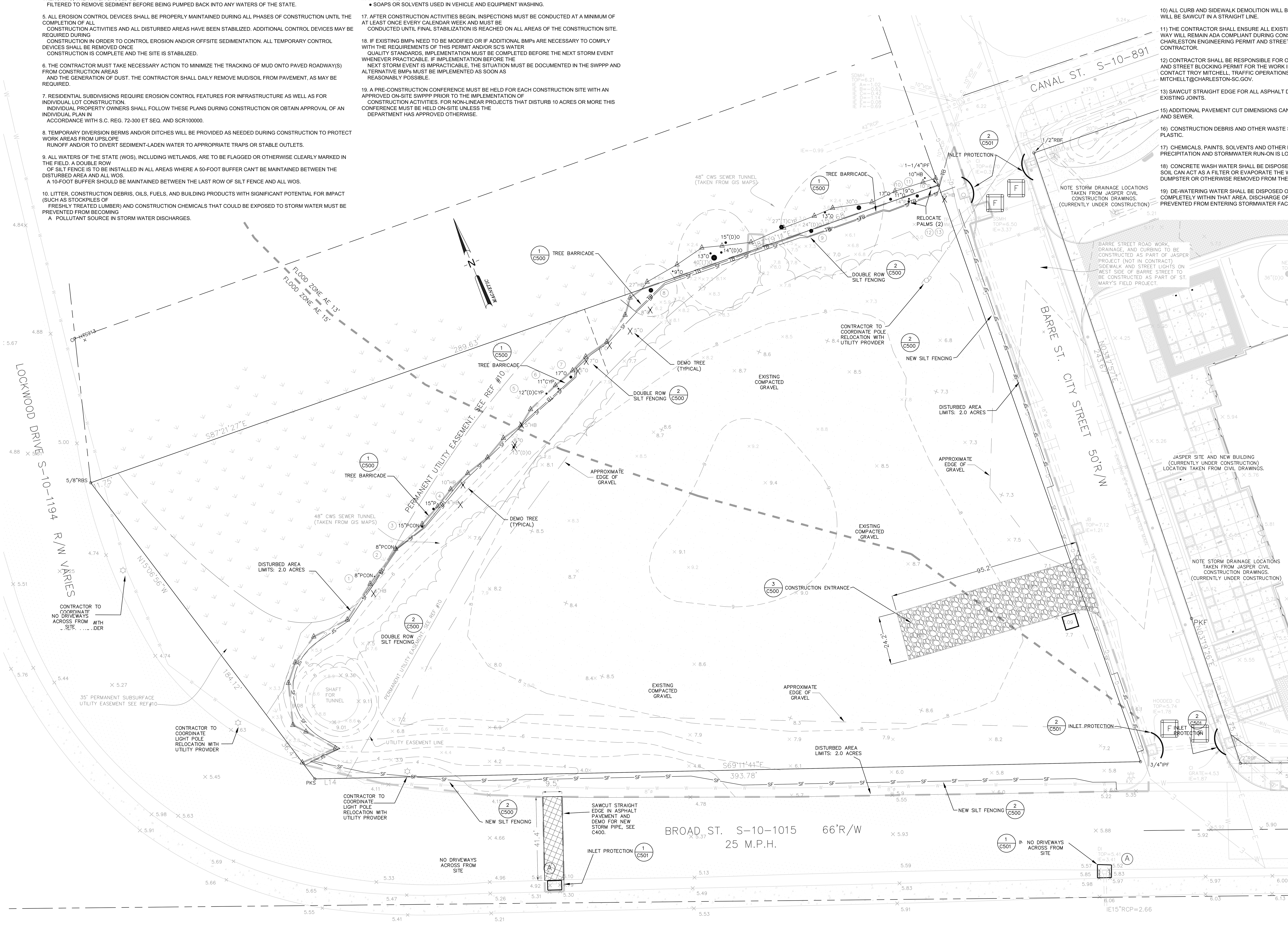

TREE NOTE
NO GRAND TREES ONSITE TO BE REMOVED.
15 TREES PER ACRE REQUIRED TO BE SAVED.
15 x .75 AC. = 11.25 (12 TREES REQUIRED)
2 PALMETTOS WILL BE RELOCATED OR REPLACED (#12 & #13)
11 PROTECTED TREES TO BE SAVED (#1 - #11 NOTATED ON PLAN)

TEMPORARY BMPs
TEMPORARY SEEDING
SILT FENCING
INLET PROTECTION
CONCRETE WASHOUT
CONSTRUCTION ENTRANCE

DEMOLITION LEGEND:
- DEMOLITION AREA
- TREE TO BE REMOVED
- LIMITS OF DISTURBANCE
TB - TREE BARRICADE (NEW)
SF - SILT FENCE
X - TEMPORARY CONSTRUCTION FENCING
- CONSTRUCTION ENTRANCE
- CONCRETE WASHOUT
- DISTURBED AREA LIMIT
A - INLET PROTECTION (SEE DETAIL 4/C500)
F - INLET PROTECTION (SEE DETAIL 2/C501)
(A) - INLET PROTECTION (SEE DETAIL 1/C501)

LEGEND

RF	REBAR FOUND
RBF	REBAR FOUND
IPF	IRON PIPE FOUND
VCP	VITREOUS CLAY PIPE
PVC	POLYVINYL CHLORIDE
SDMH	STORM DRAIN MANHOLE
IE	INVERT ELEVATION
MH	MANHOLE
SSMH	SANITARY SEWER MANHOLE
RCP	REINFORCED CONCRETE PIPE
TP	TRAVERSE POINT
WM	WATER METER
EB	ELECTRIC BOX
MPH	MILES PER HOUR
R/W	RIGHT OF WAY
REF	REFERENCE
RBS	REBAR SET
PKS	PK NAIL SET

HATCHING LEGEND
CONCRETE ASPHALT GRAVEL
WETLAND SHAFT

"I HAVE PLACED MY SIGNATURE AND SEAL ON THE DESIGN DOCUMENTS SUBMITTED SIGNIFYING THAT I ACCEPT RESPONSIBILITY FOR THE DESIGN OF THE SYSTEM. FURTHER, I CERTIFY TO THE BEST OF MY KNOWLEDGE AND BELIEF THAT THE DESIGN IS CONSISTENT WITH THE REQUIREMENTS OF TITLE 48, CHAPTER 14 OF THE CODE OF LAWS OF SC, 1976 AS AMENDED, PURSUANT TO REGULATION 72-300 ET SEQ. (IF APPLICABLE), AND IN ACCORDANCE WITH THE TERMS AND CONDITIONS OF SCR100000."

GRAPHIC SCALE
20 0 20 40
(IN FEET)
1 inch = 20 ft.

DOB APPROVAL STAMPS:

FORSBERG ENGINEERING AND SURVEYING, INC.
P.O. BOX 30575 1587 SAVANNAH HIGHWAY SUITE B
CHARLESTON, SOUTH CAROLINA 29417
(843) 571-2622 FAX (843) 571-6780
CIVIL ENGINEERING, LAND SURVEYING AND LANDSCAPE ARCHITECTURE

No.	Date	Description
	12/19/19	Issue for Pricing Check
	11/22/19	Issue for Permit
	10/11/19	Issue for Design Development
	09/13/19	Issue for 50% Design Development

Submissions & Revisions

Owner
The Beach Company
211 King Street, Suite 300
Charleston, South Carolina 29401
843.722. 2615 (Phone)
843.722.6449 (Fax)

Architect
ANTUNOVICH ASSOCIATES
ARCHITECTURE • PLANNING • INTERIOR DESIGN
224 West Huron Street, Suite 7E
Chicago, Illinois 60610
Main: (312) 266-1126
Fax: (312) 266-7123
www.antunovich.com

Structural Engineer
Britt, Peters & Associates
101 Falls Park Drive
Suite 601
Greenville, SC 29601
864.271.8869

M.E.P. & F.P. Engineers
WMA, a Salas O'Brien Company
815 South Wabash Avenue
Chicago, IL 60605
312.786.4310

Civil Engineer
Forsberg Engineering
1587 Savannah Highway
Charleston, South Carolina 29417
843.571.2622 (Phone)
843.571.6780 (Fax)

Landscape Architect
DesignWorks
205 1/2 King Street
Charleston, South Carolina 29401
843.723.5525

General Contractor
Balfour Beatty Construction
306 Meeting Street, Suite 300
Charleston, South Carolina 29401
843.974.4590

Project Location
ST. MARY'S FIELD
Charleston, South Carolina

Drawing Title
EROSION CONTROL PLAN

Seal
SOUTH CAROLINA REGISTERED PROFESSIONAL ENGINEER 29925 GADSDEN A LINTON III

Date: 4/18/20
Drawn By: MSJ
Checked By: GAL
Project No: 4280-1

Drawing No.
C104

Copyright 2016

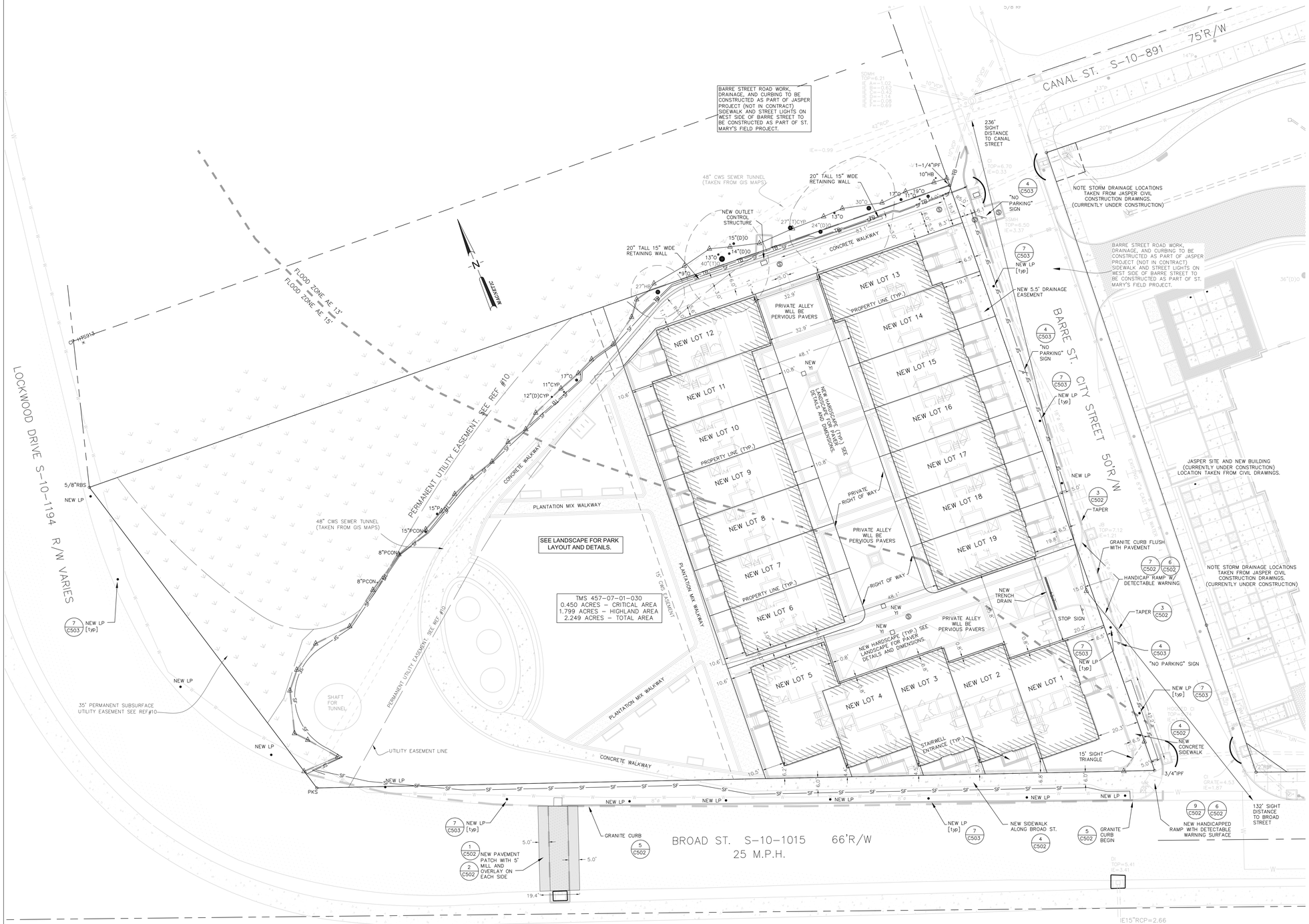

LEGEND

IPF	IRON PIPE FOUND
RF	REBAR FOUND
TYP	TYPICAL
TMS	TAX MAP SEQUENCE NUMBER
LP	LIGHT POLE
R/W	RIGHT OF WAY
REF	REFERENCE
MPH	MILES PER HOUR

HATCHING LEGEND

CONCRETE	ASPHALT	TEXT
BUILDING	BRICK	BRICK
STONE	TEXT	WETLAND
SHAFT		

TREE LEGEND ● TREE SYMBOL (TYPICAL)

O	OAK
CYP	CYRPESS
HB	HACKBERRY
P	PINE
PCON	TEXT
(D)	DOUBLE
(T)	TRIPLE

LAND USE TABLE:

TOTAL SITE AREA = 97,966.44 SF (2.249 AC)

TOTAL BUILDING SQUARE FOOTAGE = 24,220 SF (0.56AC.)
24,220 SF / 97,966 SF = 0.247 OR 25% OCCUPIED

TIOTAL HIGHLAND AREA = 78,359 SF (1.799 AC)
TOTAL BUILDING SQUARE FOOTAGE = 24,220 SF (0.56AC.)
24,220 SF / 78,359 SF = 0.309 OR 31% OCCUPIED

PARCEL 'A' (PARK PARCEL) = 1.20 ACRES
CRITICAL AREA = 0.45 ACRES
TOTAL HIGHLAND PARK AREA = 0.75 ACRES

SMALLEST NEW RESIDENTIAL LOT: 1,681 SQ.FT. (0.039 AC.)

LARGEST NEW RESIDENTIAL LOT: 3,337 SQ.FT. (0.077 AC.)

NEW PRIVATE ALLEY: 9,615 SQ.FT. (0.221 AC.)

LOTS 1-19: 36,081 SQ.FT. (0.828 AC.)

LOT NUMBER	LOT AREA	BUILDING FOOTPRINT	LOT COVERAGE
1	3,337 SF	1,518 SF	45%
2	1,793 SF	1,480 SF	83%
3	1,757 SF	1,483 SF	84%
4	1,686 SF	1,349 SF	80%
5	2,778 SF	1,706 SF	61%
6	1,958 SF	1,230 SF	63%
7	1,681 SF	1,185 SF	70%
8	1,681 SF	1,185 SF	70%
9	1,681 SF	1,185 SF	70%
10	1,681 SF	1,185 SF	70%
11	1,681 SF	1,185 SF	70%
12	1,694 SF	1,239 SF	73%
13	1,907 SF	1,239 SF	65%
14	1,763 SF	1,185 SF	67%
15	1,766 SF	1,185 SF	67%
16	1,769 SF	1,185 SF	67%
17	1,772 SF	1,185 SF	67%
18	1,775 SF	1,185 SF	67%
19	1,921 SF	1,230 SF	64%

BZA-Z VARIANCE APPROVALS (4-16-19)
LOTS 5, 6, & 19: 0' SIDE SETBACK
LOTS 6-11 & 14-19: 8' REAR SETBACK
LOTS 1-5 & 12-13: 0' REAR SETBACK
LOTS 2-19: LOT OCCUPANCY OVER 50%
APPROVAL TO CONSTRUCT 7 ATTACHED DWELLING UNITS IN A ROW

SITE NOTES:

1. SITE VISIBILITY AT ALL EXITS AND/OR INTERSECTIONS WILL BE MAINTAINED IN ACCORDANCE WITH SCDOT'S ACCESS AND ROADSIDE MANAGEMENT STANDARDS [ARMS] MANUAL.
2. REMOVAL OR CHANGES TO ON STREET PARKING/LOADING ZONES MUST BE COORDINATED WITH TRAFFIC AND TRANSPORTATION PRIOR TO CONSTRUCTION.
3. CRITICAL LINE BUFFERIS NOT REQUIRED PER ZONING ORDINANCE EXCEPTION 54-347.1.b.3

NOTES AND REFERENCES:

1) THE PROPERTY IS OWNED BY THE BEACH COMPANY.

2) THE TMS IS 457-07-01-030.

3) ZONING SUMMARY:
A) ZONING OF PARCEL - LB-G (LIMITED BUSINESS-GATEWAY OVERLAY)
B) HEIGHT DISTRICT - 3X OR AS PER G-OVERLAY
C) TOTAL AREA OF NEW PARCEL = 2.249 ACRES
HIGHGROUND = 1,806

4) REFERENCE PLAT BY JODIE R, PORTH DATED AUGUST 7, 2003 AND RECORDED IN THE CHARLESTON COUNTY RMC OFFICE IN PLAT BOOK EG PAGE 873.

5) ACCORDING TO FLOOD INSURANCE RATE MAP 45019CO514 J DATED 11/17/04 THIS PROPERTY LIES IN A FLOOD ZONE AE ELEVATION 13 AND 15.

6) PLANNING COMMISSION APPROVAL REQUIRED.

DOB APPROVAL STAMPS:

FORSBERG ENGINEERING AND SURVEYING, INC.
P.O. BOX 30575 1587 SAVANNAH HIGHWAY SUITE B
CHARLESTON, SOUTH CAROLINA 29417
(843) 571-2622 FAX (843) 571-6780
CIVIL ENGINEERING / LAND SURVEYING
AND LANDSCAPE ARCHITECTURE

No.	Date	Description
	12/19/19	Issue for Pricing Check
	11/22/19	Issue for Permit
	10/11/19	Issue for Design Development
	09/13/19	Issue for 50% Design Development

Submissions & Revisions

Owner

The Beach Company
211 King Street, Suite 300
Charleston, South Carolina 29401
843.722. 2615 (Phone)
843.722.6449 (Fax)

Architect

ANTUNOVICH ASSOCIATES
ARCHITECTURE · PLANNING · INTERIOR DESIGN
224 West Huron Street, Suite 7E
Chicago, Illinois 60610
Main: (312) 266-1126
Fax: (312) 266-7123
www.antunovich.com

Structural Engineer

Britt, Peters & Associates
101 Falls Park Drive
Suite 601
Greenville, SC 29601
864.271.8869

M.E.P. & F.P. Engineers

WMA, a Salas O'Brien Company
815 South Wabash Avenue
Chicago, IL 60605
312.786.4310

Civil Engineer

Forsberg Engineering
1587 Savannah Highway
Charleston, South Carolina 29417
843.571.2622 (Phone)
843.571.6780 (Fax)

Landscape Architect

DesignWorks
205 1/2 King Street
Charleston, South Carolina 29401
843.723.5525

General Contractor

Balfour Beatty Construction
306 Meeting Street, Suite 300
Charleston, South Carolina 29401
843.974.4590

Project Location

ST. MARY'S FIELD

Charleston, South Carolina

Drawing Title

NEW SITE PLAN

Seal

REGISTERED PROFESSIONAL ENGINEER
SOUTH CAROLINA
29925
GRAHAM A. LINTON

Date: 4/18/20
Drawn By: MSJ
Checked By: GAL
Project No: 4280-1

Drawing No.

C300

Copyright 2016

GRADING, DRAINAGE, & UTILITY LEGEND:

- 7.60 – FINISHED GRADE ELEVATION
- ~ – DRAINAGE DIRECTIONAL ARROW
- DI – DROP INLET
- HDPE – HIGH DENSITY POLYETHYLENE PIPE
- RCP – REINFORCED CONCRETE PIPE
- CO – STORM CLEAN OUT
- ——— – NEW STORM DRAIN PIPE
- ——SD—— – STORM DRAINAGE TO BE LOCATED BY OTHERS
- ——NS—— – NEW SANITARY SEWER GRAVITY
- ——NW—— – NEW POTABLE WATER

FIRE SPRINKLER NOTES:

1. a. AVAILABLE FIRE FLOW AT SITE = Q(20) = 1779 GPM
   STATIC PRESSURE = 46 PSI
   RESIDUAL PRESSURE = 36 PSI W/ FLOW = 1062 GPM
   b. FIRE FLOW DEMAND FOR BUILDING =

BENCHMARK INFORMATION:

NATIONAL GEODETIC SURVEY DISK 10 356
ELEVATION= 5.26' (NGVD 29)

*NEAR INTERSECTION OF ASHLEY AVE AND BROAD STREET.

ROOF DRAIN NOTE:

THE BUILDING ROOF DRAINS WILL BE SPLIT WITH APPROXIMATELY HALF GOING TO THE ALLEY AND HALF GOING TO THE FRONT OF THE BUILDINGS. THE ROOF DRAINS THAT GO TO THE ALLEY WILL DISCHARGE AT GRADE AND RUN OVER THE PERVIOUS PAVERS BEFORE ENTERING THE UNDERDRAIN SYSTEM. THE PORTION THAT GOES TO THE FRONT WILL DISCAHRGE ONTO SPLASH BLOCKS BEFORE ENTERING THE RIGHT OF WAY STORM SYSTEM.

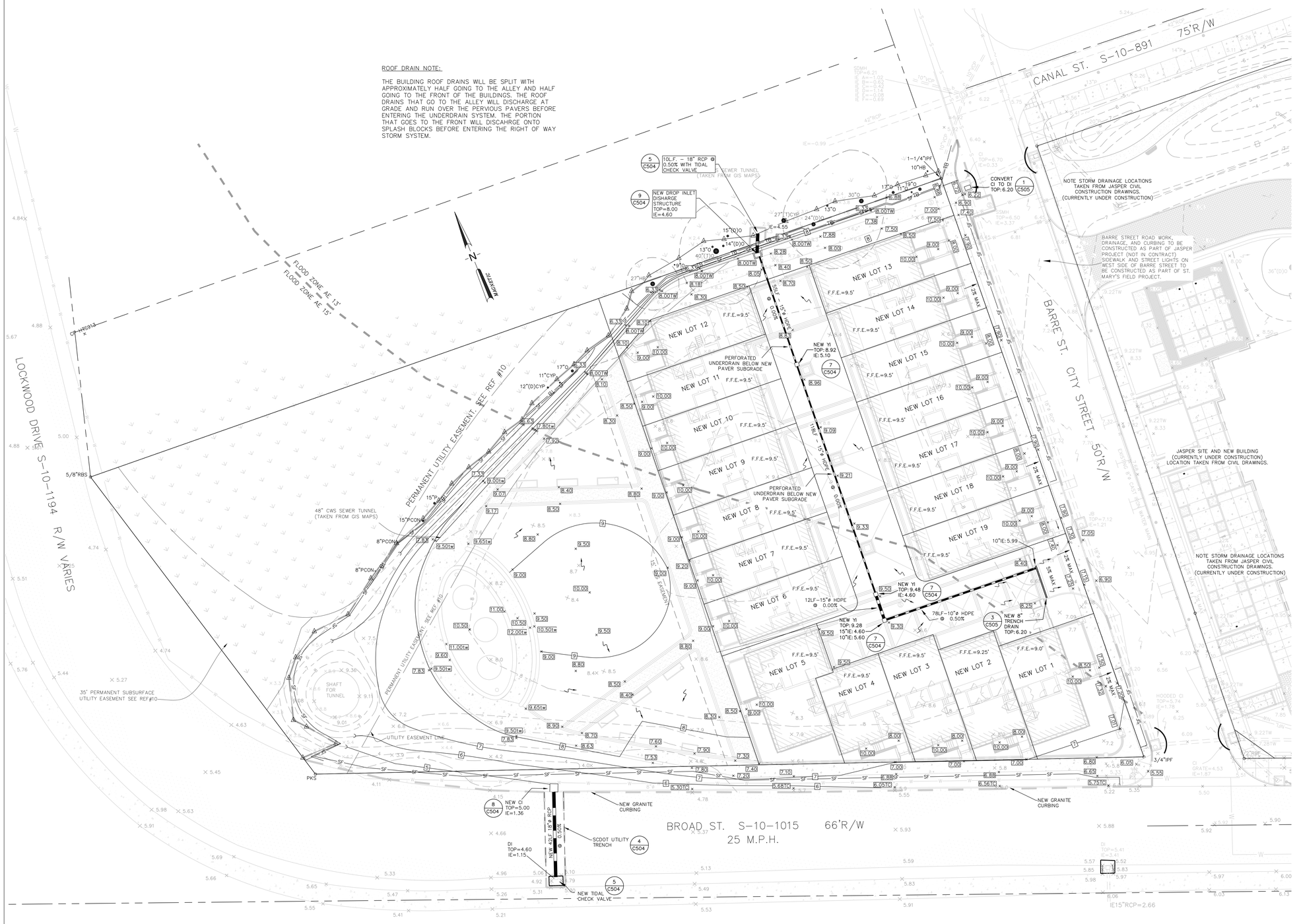

GRADING NOTES:

1) NEW STORM DRAINAGE AND SANITARY SEWER LINES SHALL BE LAID UPGRADE AFTER CONFIRMATION OF EXISTING INVERT ELEVATIONS.

2) SEE SHEET C1.1 FOR SWPPP PHASING AND SEQUENCE OF CONSTRUCTION NOTES.

3) SEE LANDSCAPE PLANS AND TREE LOCATIONS & HARDSCAPE LAYOUT.

4) SEE SHEET C5.5 FOR SEWER NOTES.

5) SEE SHEET C5.6 FOR WATER SYSTEM NOTES.

6) ALL WORK INVOLVING CPW'S LINES AND STRUCTURES SHALL BE DONE BY A CONTRACTOR FROM CPW'S "APPROVED CONTRACTORS" LIST.

7) CONTRACTOR SHALL EXCAVATE EXISTING SANITARY SEWER LINE TO CONFIRM LOCATION & DEPTH.

8) SIDEWALKS ARE TO BE ENTIRELY BROOM FINISHED.

9) SEE ARCHITECTURAL PLANS FOR FINAL BUILDING DIMENSIONS AND LAYOUT.

10) CONTRACTOR IS RESPONSIBLE OF ALL SWPPP AS-BUILTS.

11) EXISTING AND NEW SSMH, WM, WV, DRAINAGE, FIRE HYDRANTS, ETC. MUST BE ADJUSTED TO FINAL FINISHED GRADES. MINOR ADJUSTMENT MAY BE NECESSARY.

12) THE GENERAL CONTRACTOR(G.C.) SHALL COORDINATE ALL WORK SUCH THAT ALL SANITARY, POTABLE WATER, & FIRE LINES ARE CONNECTED AND TESTED AS REQUIRED FOR A COMPLETED PROJECT. THE FIRE SUPPLY LINE AND ANY/ALL ELEMENTS OF THE FIRE SYSTEM SUCH AS REMOTE FDC SHALL BE IN ACCORDANCE WITH ALL CURRENT CODES AND SHALL BE CERTIFIED AND TESTED AS REQUIRED BY THE G.C. OR OTHER PROFESSIONALS WORKING FOR THE G.C. THE CIVIL ENGINEER WILL PROVIDE A FIRE SPRINKLER SPECIFICATION SHEET FOR THE SUPPLY LINE FROM THE MAIN TO WITHIN 5' OF THE BUILDING. THE SUPPLY LINE SHALL BE TESTED AS REQUIRED UNDER SPEC SECTION 33100. THE CIVIL ENGINEER DOES NOT SPECIFY OR DESIGN ANY ELEMENTS OF THE FIRE CONTROL SYSTEM. ALL PORTIONS OF THE SUPPLY LINE & FIRE SYSTEM SHALL BE TESTED BY THE G.C. AND CERTIFIED IN ACCORDANCE WITH NFPA 24 AND LATEST VERSION OF THE IBC.

13) PRIOR TO PAVING, CONTRACTOR SHALL VERIFY THAT FINE GRADED BASE COURSE MEETS REQUIRED GRADES SUCH AS TO AVOID "BIRD BATH" AREAS ON FINAL PAVEMENT.

14) A COVENANTS OF PERMANENT MAINTENANCE OF STORMWATER FACILITIES FORM AND AS-BUILT AND DRAINAGE EASEMENT DRAWINGS FOR STORMWATER MANAGEMENT FACILITIES MUST BE COMPLETED IN ACCORDANCE WITH CITY OF CHARLESTON SPECIFICATIONS BEFORE A NOTICE OF TERMINATION OF THE CONSTRUCTION GENERAL PERMIT WILL BE APPROVED.

15) SCDOT ENCROACHMENT PERMIT REQUIRED FOR WORK IN BROAD STREET.

16) SWPPP PLAN REQUIRED FOR CITY STORMWATER APPROVAL.

17) CITY CHARLESTON REQUIRES FINISHED FLOORS TO BE 1' ABOVE BASE FLOOD ELEVATION (AE 13 & 15), SEE PLAN. THE FFE'S SHOWN ON THE PLANS ARE THE GARAGE/BASEMENT ELEVATIONS. THE LOWEST FINISHED FLOOR WILL BE 12' ABOVE THE FFE. THIS HAS BEEN COORDINATED WITH THE CITY FLOOD PLAIN MANAGER.

LEGEND

RF	REBAR FOUND
RBF	REBAR FOUND
IPF	IRON PIPE FOUND
VCP	VITREOUS CLAY PIPE
PVC	POLYVINYL CHLORIDE
SDMH	STORM DRAIN MANHOLE
IE	INVERT ELEVATION
MH	MANHOLE
SSMH	SANITARY SEWER MANHOLE
RCP	REINFORCED CONCRETE PIPE
TP	TRAVERSE POINT
WM	WATER METER
EB	ELECTRIC BOX
MPH	MILES PER HOUR
R/W	RIGHT OF WAY
REF	REFERENCE
RBS	REBAR SET
PKS	PK NAIL SET

HATCHING LEGEND

CONCRETE	ASPHALT	TEXT
BUILDING	BRICK	BRICK
STONE	TEXT	WETLAND
SHAFT		

TREE LEGEND • TREE SYMBOL (TYPICAL)

O	OAK
CYP	CYPRESS
HB	HACKBERRY
P	PINE
PCON	TEXT
(D)	DOUBLE
(T)	TRIPLE

GRAPHIC SCALE

20 0 20 40

(IN FEET)
1 inch = 20 ft.

DOB APPROVAL STAMPS:

FORSBERG ENGINEERING AND SURVEYING, INC.
P.O. BOX 30575 1587 SAVANNAH HIGHWAY SUITE B
CHARLESTON, SOUTH CAROLINA 29417
(843) 571-2622 FAX (843) 571-6780
CIVIL ENGINEERING LAND SURVEYING AND LANDSCAPE ARCHITECTURE

No.	Date	Description
	12/19/19	Issue for Pricing Check
	11/22/19	Issue for Permit
	10/11/19	Issue for Design Development
	09/13/19	Issue for 50% Design Development

Submissions & Revisions

Owner

The Beach Company
211 King Street, Suite 300
Charleston, South Carolina 29401
843.722. 2615 (Phone)
843.722.6449 (Fax)

Architect

ANTUNOVICH ASSOCIATES
ARCHITECTURE · PLANNING · INTERIOR DESIGN
224 West Huron Street, Suite 7E
Chicago, Illinois 60610
Main: (312) 266-1126
Fax: (312) 266-7123
www.antunovich.com

Structural Engineer

Britt, Peters & Associates
101 Falls Park Drive
Suite 601
Greenville, SC 29601
864.271.8869

M.E.P. & F.P. Engineers

WMA, a Salas O'Brien Company
815 South Wabash Avenue
Chicago, IL 60605
312.786.4310

Civil Engineer

Forsberg Engineering
1587 Savannah Highway
Charleston, South Carolina 29417
843.571.2622 (Phone)
843.571.6780 (Fax)

Landscape Architect

DesignWorks
205 1/2 King Street
Charleston, South Carolina 29401
843.723.5525

General Contractor

Balfour Beatty Construction
306 Meeting Street, Suite 300
Charleston, South Carolina 29401
843.974.4590

Project Location

ST. MARY'S FIELD

Charleston, South Carolina

Drawing Title

GRADING & DRAINAGE PLAN

Seal

REGISTERED PROFESSIONAL ENGINEER — SOUTH CAROLINA — 29925 — GREGORY A. LAVON

Date: 4/18/20
Drawn By: MSJ
Checked By: GAL
Project No: 4280-1

Drawing No.

C400

Copyright 2016

GRADING, DRAINAGE, & UTILITY LEGEND:

- 7.60 – FINISHED GRADE ELEVATION
- ~→ – DRAINAGE DIRECTIONAL ARROW
- DI – DROP INLET
- HDPE – HIGH DENSITY POLYETHYLENE PIPE
- RCP – REINFORCED CONCRETE PIPE
- CO – STORM CLEAN OUT
- ——— – NEW STORM DRAIN PIPE
- ——SD—— – STORM DRAINAGE TO BE LOCATED BY OTHERS
- ——NS—— – NEW SANITARY SEWER GRAVITY
- ——NW—— – NEW POTABLE WATER

FIRE SPRINKLER NOTES:

1. a. AVAILABLE FIRE FLOW AT SITE = Q(20) = 1779 GPM
   STATIC PRESSURE = 46 PSI
   RESIDUAL PRESSURE = 36 PSI W/ FLOW = 1062 GPM
   b. FIRE FLOW DEMAND FOR BUILDING =

BENCHMARK INFORMATION:

NATIONAL GEODETIC SURVEY DISK 10 356
ELEVATION= 5.26' (NGVD 29)

*NEAR INTERSECTION OF ASHLEY AVE AND BROAD STREET.

GRADING NOTES:

1) NEW STORM DRAINAGE AND SANITARY SEWER LINES SHALL BE LAID UPGRADE AFTER CONFIRMATION OF EXISTING INVERT ELEVATIONS.

2) SEE SHEET C1.1 FOR SWPPP PHASING AND SEQUENCE OF CONSTRUCTION NOTES.

3) SEE LANDSCAPE PLANS AND TREE LOCATIONS & HARDSCAPE LAYOUT.

4) SEE SHEET C5.5 FOR SEWER NOTES.

5) SEE SHEET C5.6 FOR WATER SYSTEM NOTES.

6) ALL WORK INVOLVING CPW'S LINES AND STRUCTURES SHALL BE DONE BY A CONTRACTOR FROM CPW'S "APPROVED CONTRACTORS" LIST.

7) CONTRACTOR SHALL EXCAVATE EXISTING SANITARY SEWER LINE TO CONFIRM LOCATION & DEPTH.

8) SIDEWALKS ARE TO BE ENTIRELY BROOM FINISHED.

9) SEE ARCHITECTURAL PLANS FOR FINAL BUILDING DIMENSIONS AND LAYOUT.

10) CONTRACTOR IS RESPONSIBLE OF ALL SWPPP AS–BUILTS.

11) EXISTING AND NEW SSMH, WM, WV, DRAINAGE, FIRE HYDRANTS, ETC. MUST BE ADJUSTED TO FINAL FINISHED GRADES. MINOR ADJUSTMENT MAY BE NECESSARY.

12) THE GENERAL CONTRACTOR(G.C.) SHALL COORDINATE ALL WORK SUCH THAT ALL SANITARY, POTABLE WATER, & FIRE LINES ARE CONNECTED AND TESTED AS REQUIRED FOR A COMPLETED PROJECT. THE FIRE SUPPLY LINE AND ANY/ALL ELEMENTS OF THE FIRE SYSTEM SUCH AS REMOTE FDC SHALL BE IN ACCORDANCE WITH ALL CURRENT CODES AND SHALL BE CERTIFIED AND TESTED AS REQUIRED BY THE G.C. OR OTHER PROFESSIONALS WORKING FOR THE G.C. THE CIVIL ENGINEER WILL PROVIDE A FIRE SPRINKLER SPECIFICATION SHEET FOR THE SUPPLY LINE FROM THE MAIN TO WITHIN 5' OF THE BUILDING. THE SUPPLY LINE SHALL BE TESTED AS REQUIRED UNDER SPEC SECTION 331100. THE CIVIL ENGINEER DOES NOT SPECIFY OR DESIGN ANY ELEMENTS OF THE FIRE CONTROL SYSTEM. ALL PORTIONS OF THE SUPPLY LINE & FIRE SYSTEM SHALL BE TESTED BY THE G.C. AND CERTIFIED IN ACCORDANCE WITH NFPA 24 AND LATEST VERSION OF THE IBC.

13) PRIOR TO PAVING, CONTRACTOR SHALL VERIFY THAT FINE GRADED BASE COURSE MEETS REQUIRED GRADES SUCH AS TO AVOID "BIRD BATH" AREAS ON FINAL PAVEMENT.

14) A COVENANTS OF PERMANENT MAINTENANCE OF STORMWATER FACILITIES FORM AND AS–BUILT AND DRAINAGE EASEMENT DRAWINGS FOR STORMWATER MANAGEMENT FACILITIES MUST BE COMPLETED IN ACCORDANCE WITH CITY OF CHARLESTON SPECIFICATIONS BEFORE A NOTICE OF TERMINATION OF THE CONSTRUCTION GENERAL PERMIT WILL BE APPROVED.

LEGEND

RF	REBAR FOUND
RBF	REBAR FOUND
IPF	IRON PIPE FOUND
VCP	VITREOUS CLAY PIPE
PVC	POLYVINYL CHLORIDE
SDMH	STORM DRAIN MANHOLE
IE	INVERT ELEVATION
MH	MANHOLE
SSMH	SANITARY SEWER MANHOLE
RCP	REINFORCED CONCRETE PIPE
TP	TRAVERSE POINT
WM	WATER METER
EB	ELECTRIC BOX
MPH	MILES PER HOUR
R/W	RIGHT OF WAY
REF	REFERENCE
RBS	REBAR SET
PKS	PK NAIL SET

HATCHING LEGEND

CONCRETE | ASPHALT | TEXT
BUILDING | BRICK | BRICK
STONE | TEXT | WETLAND
SHAFT

TREE LEGEND ✦ TREE SYMBOL (TYPICAL)

O	OAK
CYP	CYPRESS
HB	HACKBERRY
P	PINE
PCON	TEXT
(D)	DOUBLE
(T)	TRIPLE

GRAPHIC SCALE

20 0 20 40

(IN FEET)
1 inch = 20 ft.

DOB APPROVAL STAMPS:

FORSBERG ENGINEERING AND SURVEYING, INC.
P.O. BOX 30575 1587 SAVANNAH HIGHWAY SUITE B
CHARLESTON, SOUTH CAROLINA 29417
(843) 571-2622 FAX (843) 571-6780
CIVIL ENGINEERING, LAND SURVEYING
AND LANDSCAPE ARCHITECTURE

No.	Date	Description
	12/19/19	Issue for Pricing Check
	11/22/19	Issue for Permit
	10/11/19	Issue for Design Development
	09/13/19	Issue for 50% Design Development

Submissions & Revisions

Owner

The Beach Company
211 King Street, Suite 300
Charleston, South Carolina 29401
843.722. 2615 (Phone)
843.722.6449 (Fax)

Architect

ANTUNOVICH ASSOCIATES
ARCHITECTURE · PLANNING · INTERIOR DESIGN
224 West Huron Street, Suite 7E
Chicago, Illinois 60610
Main: (312) 266-1126
Fax: (312) 266-7123
www.antunovich.com

Structural Engineer

Britt, Peters & Associates
101 Falls Park Drive
Suite 601
Greenville, SC 29601
864.271.8869

M.E.P. & F.P. Engineers

WMA, a Salas O'Brien Company
815 South Wabash Avenue
Chicago, IL 60605
312.786.4310

Civil Engineer

Forsberg Engineering
1587 Savannah Highway
Charleston, South Carolina 29417
843.571.2622 (Phone)
843.571.6780 (Fax)

Landscape Architect

DesignWorks
205 1/2 King Street
Charleston, South Carolina 29401
843.723.5525

General Contractor

Balfour Beatty Construction
306 Meeting Street, Suite 300
Charleston, South Carolina 29401
843.974.4590

Project Location

ST. MARY'S FIELD

Charleston, South Carolina

Drawing Title

NEW UTILITY PLAN

Seal

SOUTH CAROLINA REGISTERED PROFESSIONAL ENGINEER 29925 GAIL ALISON LINTON

Date:	4/18/20
Drawn By:	MSJ
Checked By:	GAL
Project No:	4280-1

Drawing No.

C401

Copyright 2016

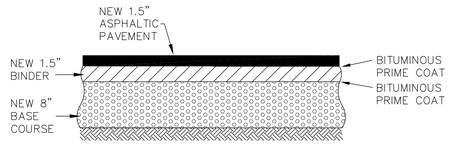

HEAVY DUTY PAVEMENT SECTION 1 C502

NOT TO SCALE

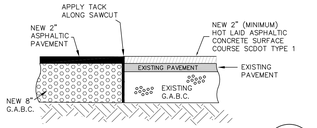

PAVEMENT/OVERLAY JOINING DETAIL 2 C502

NOT TO SCALE

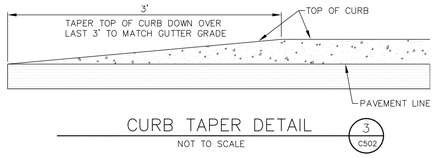

CURB TAPER DETAIL 3 C502

NOT TO SCALE

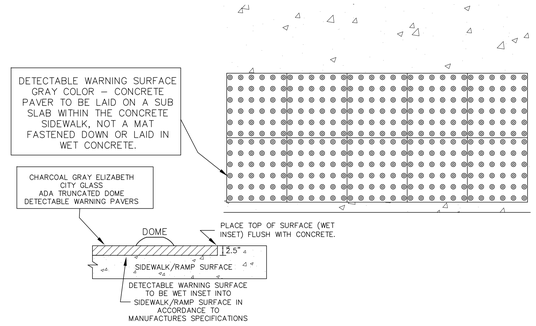

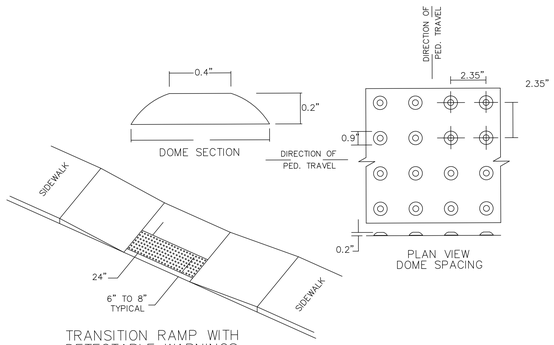

NOTES:

1. DETECTABLE WARNING SURFACES SHALL BE PROVIDED AT THE FOLLOWING LOCATIONS:
   (A) WHERE A SIDEWALK CROSSES A VEHICULAR WAY, EXCLUDING UN-SIGNALIZED DRIVEWAY CROSSINGS.
   (B) WHERE A RAIL SYSTEM CROSSES A PEDESTRIAN FACILITY THAT IS NOT SHARED WITH VEHICLES.
   (C) AT ISLANDS AND MEDIANS THAT ARE CUT THROUGH LEVEL WITH THE ROADWAY.
2. AT CURB RAMPS AND BLENDED TRANSITIONS, DETECTABLE WARNING SURFACES SHALL BE LOCATED SO THE EDGE NEAREST THE CURB LINE IS 6" MINIMUM AND 8" MAXIMUM DISTANCE FROM THE CURB LINE. THE SURFACE SHALL EXTEND A MINIMUM OF 24" ONTO THE RAMP IN THE DIRECTION OF TRAVEL FOR THE FULL WIDTH OF THE CURB RAMP.
3. AT RAIL CROSSINGS, THE DETECTABLE WARNING SURFACE SHALL BE 24" DEEP AND FULL WIDTH OF THE SIDEWALK. THE EDGE OF THE SURFACE NEAREST THE RAIL CROSSING IS 6" MINIMUM AND 8" MAXIMUM DISTANCE FROM THE VEHICLE DYNAMIC ENVELOPE (6" FROM THE NEAREST RAIL) UNLESS OTHERWISE NOTED BY THE RAILROAD.
4. DETECTABLE WARNING SURFACES SHALL CONSIST OF AN AREA OF TRUNCATED DOMES ALIGNED IN A SQUARE GRID PATTERN. THE BASE OF THESE DOMES SHALL BE 0.9". THE TOP OF DOMES SHALL BE 0.4" WITH A HEIGHT OF 0.2". THE DETECTABLE WARNING DOMES SHALL HAVE A CENTER-TO-CENTER SPACING OF 2.35".
5. THERE SHALL BE A MINIMUM OF 70 PERCENT CONTRAST IN LIGHT REFLECTANCE BETWEEN THE DETECTABLE WARNING AND AN ADJOINING SURFACE, OR THE DETECTABLE WARNING SHALL BE CHARCOAL GRAY COLOR THE MATERIAL USED TO PROVIDE VISUAL CONTRAST SHALL BE AN INTEGRAL PART OF THE DETECTABLE WARNING SURFACE.

DETECTABLE WARNING SUFACE 6 C502

NOT TO SCALE

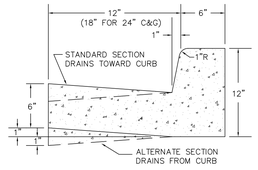

CURB & GUTTER DETAIL

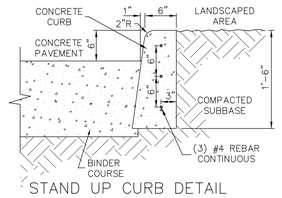

STAND UP CURB DETAIL

CONCRETE CURB DETAIL 8 C502

NOT TO SCALE

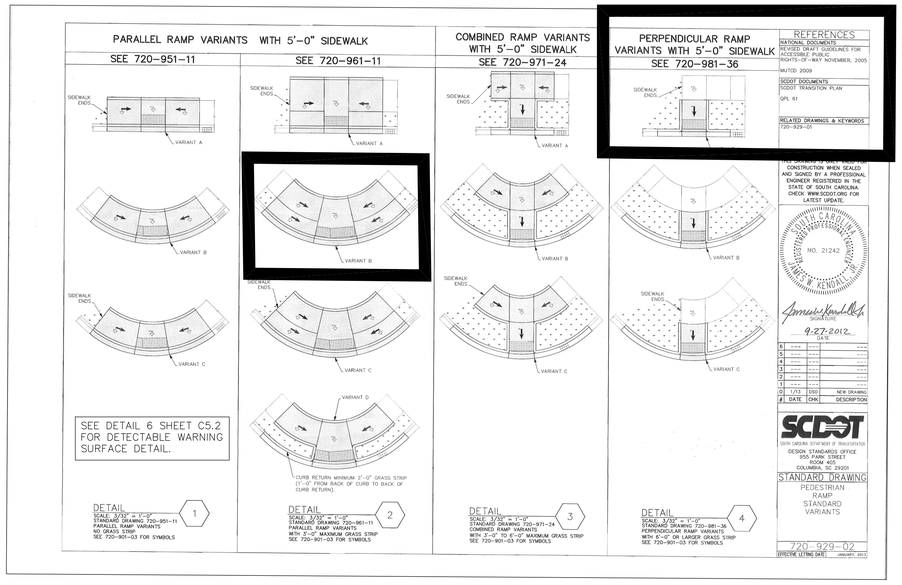

HANDICAP RAMP IN SCDOT R/W 9 C502

NOT TO SCALE

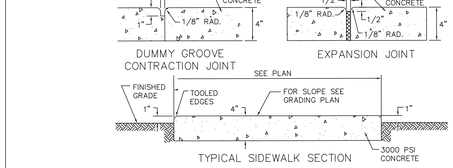

SIDEWALK PLAN

SIDEWALK TO BE BROOM FINISHED PERPENDICULAR TO PEDESTRIAN TRAFFIC.

NOTE: ALSO PROVIDE EXPANSION JOINTS WHERE SIDEWALK ABUTS CURB & GUTTER AND/OR OTHER SIDEWALKS.

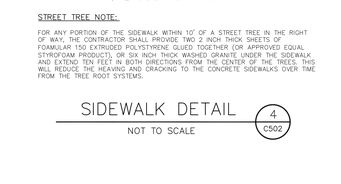

TYPICAL SIDEWALK SECTION

STREET TREE NOTE:

FOR ANY PORTION OF THE SIDEWALK WITHIN 10' OF A STREET TREE IN THE RIGHT OF WAY, THE CONTRACTOR SHALL PROVIDE TWO 2 INCH THICK SHEETS OF FOAMULAR 150 EXTRUDED POLYSTYRENE GLUED TOGETHER (OR APPROVED EQUAL STYROFOAM PRODUCT), OR SIX INCH THICK WASHED GRANITE UNDER THE SIDEWALK AND EXTEND TEN FEET IN BOTH DIRECTIONS FROM THE CENTER OF THE TREES. THIS WILL REDUCE THE HEAVING AND CRACKING TO THE CONCRETE SIDEWALKS OVER TIME FROM THE TREE ROOT SYSTEMS.

SIDEWALK DETAIL 4 C502

NOT TO SCALE

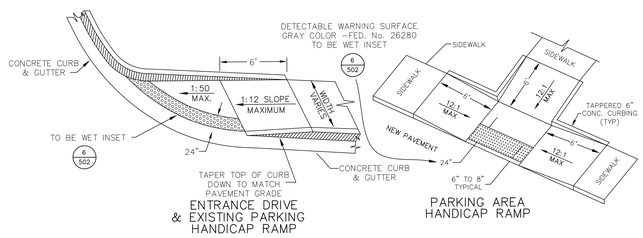

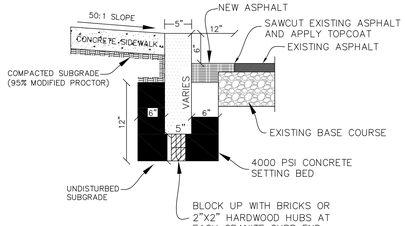

NOTE:
1. JOINTS BETWEEN CURBS TO BE BUTT JOINTED.
2. IF GRANITE CURBING IS TO BE RESET, ANY SECTIONS LESS THAN 5' IN LENGTH SHALL NOT BE USED.
3. CMT CONCRETE BEHIND CURB IN TREE WELL AREAS. SPAN TREE WELL WITH CONTINUOUS CURB IF POSSIBLE.
4. MINIMUM GRANITE CURB TO 5' LENGTH.

GRANITE CURB DETAIL 5 C502

NOT TO SCALE

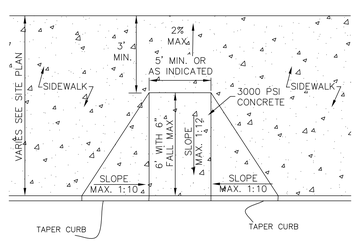

HANDICAP RAMP 7 C502

NOT TO SCALE

PARKING LAYOUT AND DETAILS

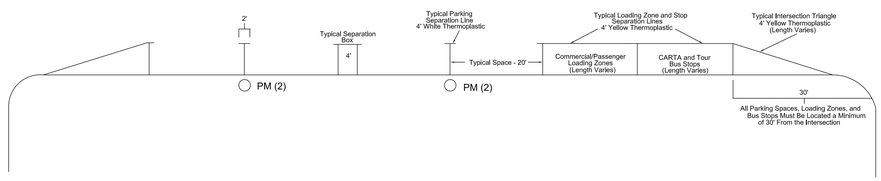

City of Charleston

Department of Traffic and Transportation
180 Lockwood Drive Extension
Charleston, South Carolina 29403
Phone (843) 724-7368
Fax (843) 722-5956

SIGNS AND MARKINGS

Standard Parking Layout Details
City of Charleston

Michael Mathis - Transportation Project Manager

DRAWN BY	DATE	DWG NO:	DWG NO.
MWM			ORIG
SCALE 1:10	FILE	SHEET	1 of 1

PARKING LAYOUT DETAIL 10 C502

NOT TO SCALE

DOB APPROVAL STAMPS:

FORSBERG ENGINEERING AND SURVEYING, INC.
P.O. BOX 30575 1587 SAVANNAH HIGHWAY SUITE B
CHARLESTON, SOUTH CAROLINA 29407
(843) 571-2622 FAX (843) 571-6780
CIVIL ENGINEERING, LAND SURVEYING AND LANDSCAPE ARCHITECTURE

No.	Date	Description
6	12/19/19	Issue for Pricing Check
5	11/22/19	Issue for Permit
4	10/11/19	Issue for Design Development
3	09/13/19	Issue for 50% Design Development
-0	1/13	NEW DRAWING
#	DATE	DESCRIPTION

Submissions & Revisions

Owner

The Beach Company
211 King Street, Suite 300
Charleston, South Carolina 29401
843.722.2615 (Phone)
843.722.6449 (Fax)

Architect

ANTUNOVICH ASSOCIATES
ARCHITECTURE · PLANNING · INTERIOR DESIGN
224 West Huron Street, Suite 7E
Chicago, Illinois 60610
Main: (312) 266-1126
Fax: (312) 266-7123
www.antunovich.com

Structural Engineer

Britt, Peters & Associates
101 Falls Park Drive
Suite 601
Greenville, SC 29601
864.271.8869

M.E.P. & F.P. Engineers

WMA, a Salas O'Brien Company
815 South Wabash Avenue
Chicago, IL 60605
312.786.4310

Civil Engineer

Forsberg Engineering
1587 Savannah Highway
Charleston, South Carolina 29417
843.571.2622 (Phone)
843.571.6780 (Fax)

No. Description Date

Landscape Architect

DesignWorks
205 1/2 King Street
Charleston, South Carolina 29401
843.723.5525

General Contractor

Balfour Beatty Construction
306 Meeting Street, Suite 300
Charleston, South Carolina 29401
843.974.4590

Project Location

ST. MARY'S FIELD

Charleston, South Carolina

Drawing Title

CONSTRUCTION DETAILS

Seal

SOUTH CAROLINA REGISTERED PROFESSIONAL ENGINEER 29925 KAREN A. LINTON

Date:	10/11/19
Drawn By:	TL
Checked By:	DCF
Project No:	4280-1

Drawing No.

C502

Copyright 2016

SIGN	DIMENSION (INCHES)					
	A	B	C	D	E	F
STD.	30	3/4	10	10C	5	12-1/2

LETTER INDICATES STANDARD ALPHABET SERIES

COLORS:
LEGEND – WHITE REFLECTORIZED PAINT
BACKGROUND – RED REFLECTORIZED PAINT

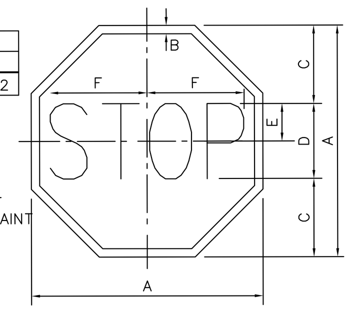

INSTALLATION NOTES:
1) SIGNS WILL BE INSTALLED TO MUTCD STANDARDS.
2) SIGNS WILL BE BREAKAWAY DECORATIVE TYPE ASSEMBLY WITHIN PROJECT SITE. SEE DETAIL (15/C601)
2) SIGNS WILL BE BREAKAWAY SCDOT TYPE ASSEMBLY WITHIN RIGHT OF WAY. SEE DETAIL (6/C605)

STOP SIGN DETAIL (1/C503)
NOT TO SCALE

SIGNAGE NOTES:
TRAFFIC CONTROL SIGNS SHALL COMPLY WITH SPECIFICATIONS AS FOUND IN MANUAL ON UNIFORM TRAFFIC CONTROL DEVICES (2009 EDITION) AND SHALL MATCH THE FOLLOWING SIGNS:

SIGN TYPE	SIGN # (MUTCD)	SIZE
STOP	R1-1	30"x30"
HANDICAP SIGN	R7-8	12"x18"
VAN ACCESSIBLE SIGN	R7-8a	12"x18"
ONE WAY	R6-1	36"x12"
DO NOT ENTER	R5-1	30"x30"
KEEP RIGHT	R4-7	24"x30"

NOTE: DECORATIVE POST SHALL BE MAINTAINED BY POA. CITY OF CHARLESTON NOT RESPONSIBLE FOR REPLACEMENT OF DECORATIVE POST AND BRACKETS.

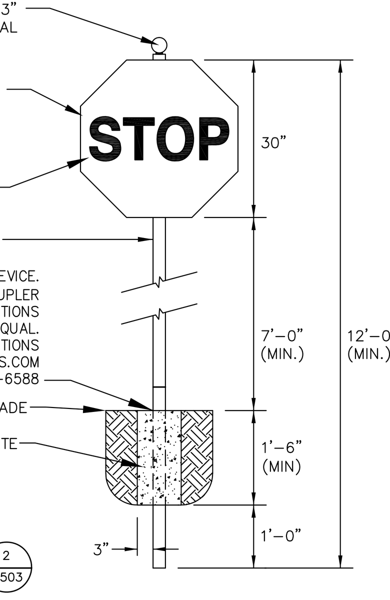

BREAKAWAY DECORATIVE SIGN POST DETAIL (OUTSIDE R/W) (2/C503)
NOT TO SCALE

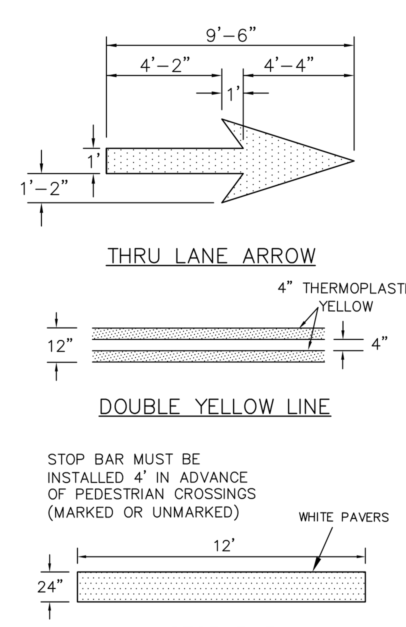

PAVEMENT MARKING DETAIL (3/C503)
NOT TO SCALE

NUMBER	SIZE	CLASS
*R8-3	12" X 18"	STANDARD

*(REFERENCE: THE MANUAL ON UNIFORM TRAFFIC CONTROL DEVICES FOR STREET AND HIGHWAYS)

USE BREAKAWAY POST (15/C601)

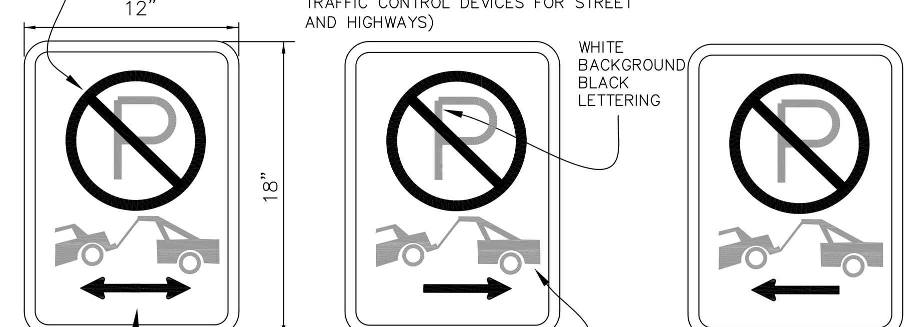

SIGNS TO BE MOUNTED TO LIGHT POLES WITH PROPER BANDING OR STANDARD BREAKAWAY U CHANNEL POSTS (6/C605)

SIGNS TO BE MOUNTED AT A HEIGHT OF 7' ABOVE GROUND LEVEL. SEE PLANS FOR SIGN LOCATIONS. TO BE MOUNTED AT 45° ANGLE.

NO PARKING ROADWAY SIGN DETAILS (4/C503)
NOT TO SCALE

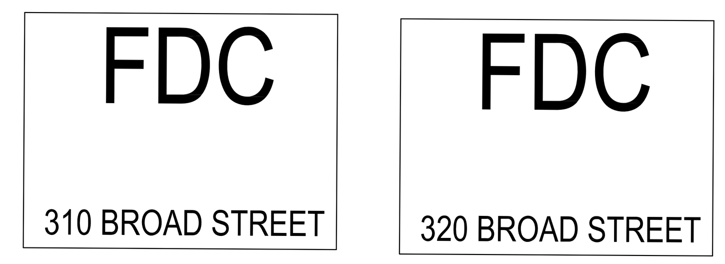

*THERE WILL BE 2 FDC'S. ONE FOR RESIDENTIAL. ONE FOR OFFICE.

1) **6" RED LETTERS READING "FDC" POSTED ON DURABLE SIGN WITH A WHITE BACKGROUND.

2) **2" RED LETTERS BELOW "FDC" INDICATING THE BUILDING ADDRESS.

3) SIGN SHALL BE VISIBLE AND UNOBSTRUCTED. SIGN SHALL BE MOUNTED ON OWNER APPROVED POST.

**ALTERNATIVE COLOR SCHEMES MAY BE APPROVED BY THE FIRE MARSHAL. ALTERNATIVE COLOR SCHEMES MUST HAVE REFLECTIVE LETTERS OR BACKING.

"FDC" SIGN (6/C503)

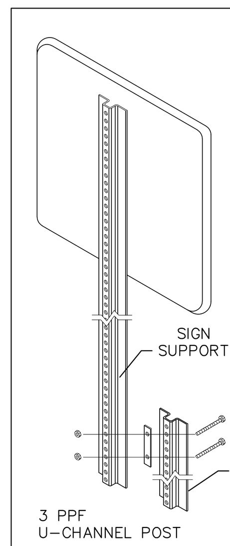

GENERAL NOTES

1.) ALL TRAFFIC CONTROL DEVICES INCLUDING BREAKAWAY SYSTEMS FOR GROUND MOUNTING SIGN SUPPORTS, SHALL COMPLY WITH ALL NCHRP REPORT 350 REQUIREMENTS AND SHALL BE APPROVED BY THE DEPARTMENT. ALL APPROVED TRAFFIC CONTROL DEVICES ARE INCLUDED ON THE "APPROVED PRODUCTS LIST FOR TRAFFIC CONTROL DEVICES IN WORK ZONES". THE LIST MAY BE ACCESSED ON THE DEPARTMENTS WEB SITE AT www.scdot.org.

2.) ALL BREAKAWAY SYSTEMS FOR GROUND MOUNTED SIGN SUPPORTS SHALL COMPLY WITH THE AASTO "STANDARD SPECIFICATIONS FOR STRUCTURAL SUPPORTS FOR HIGHWAY SIGNS, LUMINARES AND TRAFFIC SIGNALS", LATEST EDITION INCLUDING THE LATEST INTERIM REVISIONS, IN ACCORDANCE WITH THE REQUIREMENTS OF NCHRP REPORT 350.

3.) ALL BREAKAWAY SYSTEM HARDWARE, INCLUDING BOLTS, NUTS, WASHERS, AND SPACERS, ILLUSTRATED ON THIS DRAWING ARE TYPICAL AND MAY VARY IN SIZE, NUMBER, CONFIGURATION, AND OVERALL DESIGN IN ACCORDANCE WITH EACH SPECIFIC MANUFACTURER'S DESIGN.

4.) THESE ILLUSTRATIONS ARE INTENDED FOR INFORMATION ONLY. SIMILARITY BETWEEN THESE ILLUSTRATIONS AND ANY SPECIFIC DEVICE OR SYSTEM IS COINCIDENTAL AND IS NOT INTENDED AS EITHER A RECOMMENDATION OR AN ENDORSEMENT OF A SPECIFIC DEVICE OR DESIGN.

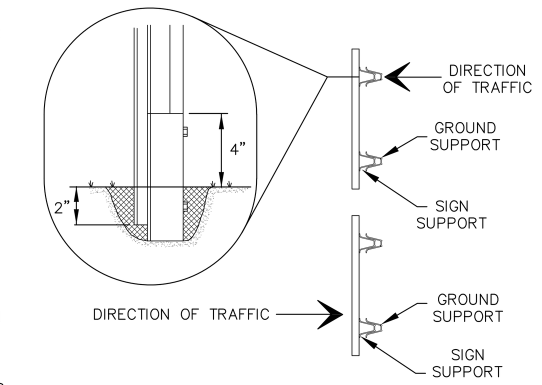

INSTALL THE BREAKAWAY SYSTEM TO FUNCTION IN ACCORDANCE WITH THE DIRECTION OF TRAFFIC IN THE ADJACENT TRAVEL LINE. INSTALL THE GROUND SUPPORT (STUB) BETWEEN THE SIGN SUPPORT AND THE APPROACHING TRAFFIC IN THE ADJACENT TRAVEL LANE.

BLOTS MUST BE 4" APART. THE GROUND SUPPORT (STUB) SHALL NOT EXTEND HIGHER THAN 4" ABOVE THE GROUND. ATTACH THE SIGN SUPPORT TO THE BACK OF THE GROUND SUPPORT (STUB) WITH THE APPROPRIATE HARDWARE PROVIDED BY THE MANUFACTURER OF THE BREAKAWAY SYSTEM. OVERALL LENGTH OF THE BREAKAWAY SYSTEM IS 6".

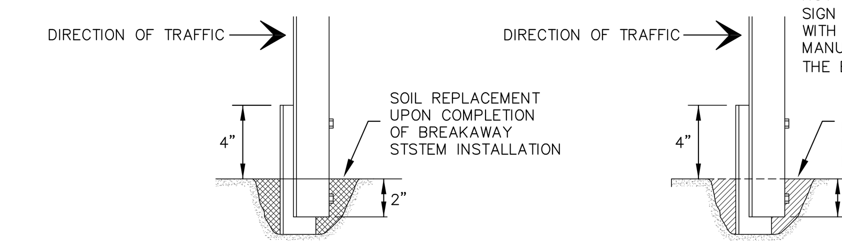

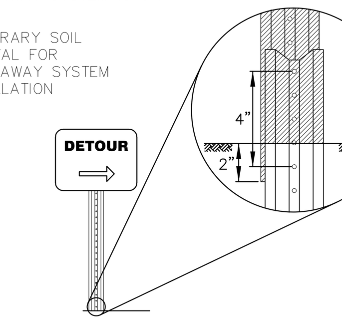

POST INSTALLATION (IN PUBLIC RIGHT OF WAY)

DRIVE THE GROUND SUPPORT (STUB APPROXIMATELY 30" TO 36" INTO THE GROUND AS SPECIFIED BY THE MANUFACTURER OF THE BREAKAWAY SYSTEM SO THAT NO MORE THAN 4" OF THE GROUND SUPPORT (STUB(EXTENDS ABOVE THE GROUND. REMOVE ENOUGH SOIL FROM AROUND THE GROUND SUPPORT (STUB) TO PERMIT ACCESS TO THE HOLES FOR THE INSERTION AND TIGHTENING OF THE LOWER BOLT OF THE BREAKAWAY SYSTEM. UPON COMPLETING THE INSTALLATION OF THE BREAKAWAY SYSYEM. REPLACE THE SOIL AND TAMP.

SCDOT SIGNING ASSEMBLY DETAIL (5/C503)
NOT TO SCALE

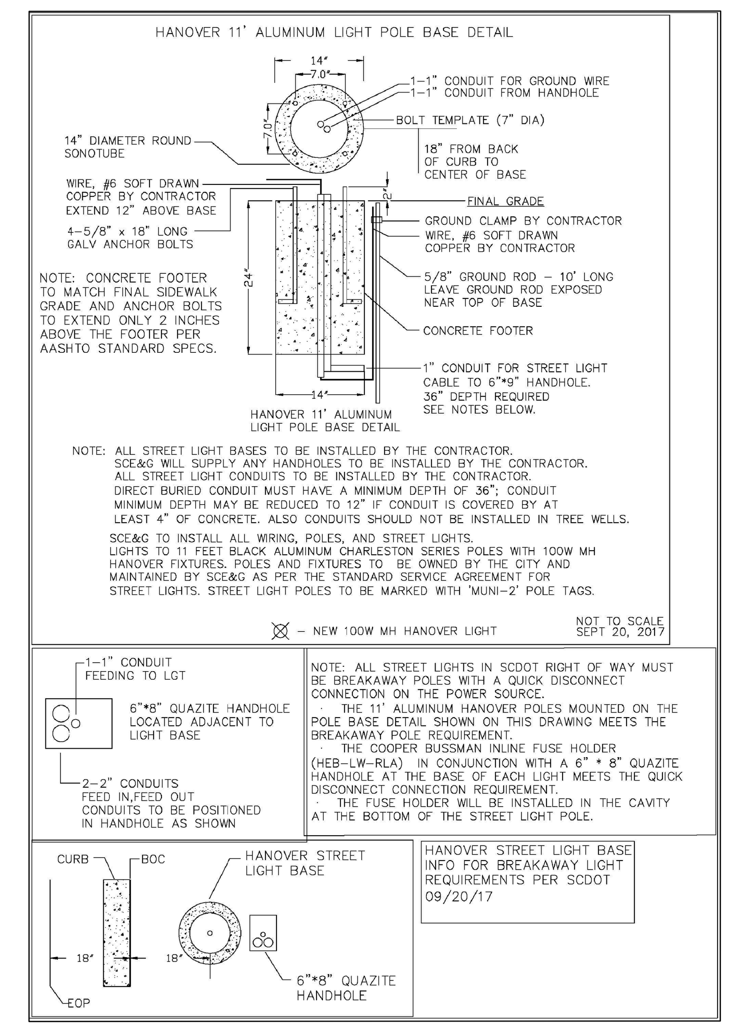

CITY STREET LIGHT BASE DETAIL (7/C503)
NOT TO SCALE

CITY OF CHARLESTON
TRAFFIC & STREET NAME SIGN STANDARDS

- TRAFFIC SIGNS SHOULD BE DESIGNED AND PLACED IN ACCORDANCE WITH THE LATEST REVISION OF THE 2009 MANUAL ON UNIFORM TRAFFIC CONTROL DEVICES FOR STREETS AND HIGHWAYS (MUTCD), PUBLISHED BY THE U.S. DEPARTMENT OF TRANSPORTATION.
- NON-TRAFFIC RELATED SIGNS SHOULD BE APPROVED BY THE DEPARTMENT OF TRAFFIC AND TRANSPORTATION.
- REGULATORY, WARNING, AND GUIDE SIGNS SHALL BE FABRICATED WITH ASTM INTERNATIONAL, FORMERLY AMERICAN SOCIETY FOR TESTING AND MATERIALS, TYPE III (HIGH INTENSITY) OR GREATER RETROREFLECTIVE SHEETING. UPON APPROVAL BY THE DEPARTMENT OF TRAFFIC AND TRANSPORTATION PARKING SIGNS AND NON- TRAFFIC RELATED SIGNS MAY BE FABRICATED WITH ASTM TYPE I (ENGINEER GRADE) OR GREATER MATERIAL.
- STREET NAME SIGNS SHALL BE FABRICATED USING EXTRUDED ALUMINUM BLADES 9" IN HEIGHT. THE MINIMUM LENGTH IS 24" WITH 48" AS THE MAXIMUM. THE ACTUAL LENGTH OF THE BLADE WILL BE DICTATED BY THE NUMBER OF LETTERS IN THE NAME.
- THE STREET NAME COLOR SCHEME SHOULD BE WHITE ASTM TYPE III LETTERING ON A GREEN BACKGROUND.
- THE STREET NAME LETTER FONT (OR TYPEFACE) SHOULD BE FHWA SERIES "C"; COMMONLY KNOWN AS HIGHWAY GOTHIC "C".
- ALL STREET NAMES ARE TO CONSIST OF 6" UPPER-CASE LETTERS WITH 4.5" LOWER-CASE LETTERS. THE STREET DESIGNATIONS, E.G., ST, RD, DR, CIR, PKWY, AVE, AND BLVD ARE TO BE 50% SUPERSCRIPT.
- THE STREET NAME, INCLUDING THE SUPERSCRIPT DESIGNATION, SHALL BE CENTERED VERTICALLY AND HORIZONTALLY ON THE BLADE.
- THE SPACING FROM THE BLADE EDGE TO THE BEGINNING AND END OF THE STREET NAME, INCLUDING THE SUPERSCRIPT DESIGNATION, SHOULD BE A MINIMUM OF 2".
- STREET NAME SIGNS SHOULD BE MOUNTED WITH A VERTICAL CLEARANCE OF AT LEAST 8' MEASURED FROM THE BOTTOM OF THE SIGN TO THE NEAR EDGE OF THE PAVEMENT. ALL OTHER SIGNS SHALL BE MOUNTED AT LEAST 7' FROM THE BOTTOM OF THE SIGN TO THE NEAR EDGE OF THE PAVEMENT, EXCEPT WHEN A SUPPLEMENTAL PLAQUE OR SECONDARY SIGN IS PERMITTED.
- IF A SUPPLEMENTAL PLAQUE OR SECONDARY SIGN IS PERMITTED TO BE MOUNTED ON THE SAME ASSEMBLY AS ANOTHER SIGN, THE MAJOR (MOST IMPORTANT) SIGN SHALL BE INSTALLED ABOVE THE SUPPLEMENTAL PLAQUE OR SECONDARY SIGN. THE MINIMUM HEIGHT FROM THE BOTTOM OF THE SUPPLEMENTAL PLAQUE OR SECONDARY SIGN TO THE NEAR EDGE OF THE PAVEMENT SHALL BE 6'.
- THE MINIMUM LATERAL OFFSET FOR INSTALLED SIGNS SHOULD BE 2' MEASURED FROM THE NEAREST SIGN EDGE TO THE PAVEMENT EDGE (OR THE FACE OF CURB). A MINIMUM OFFSET OF 1' FROM THE FACE OF THE CURB MAY BE USED IN AREAS WHERE SIDEWALK WIDTH IS LIMITED OR WHERE EXISTING POLES ARE CLOSE TO THE CURB.
- ALL TRAFFIC SIGN POSTS SHOULD BE SECURELY INSTALLED AT LEAST 2' IN THE GROUND. TRAFFIC SIGN POSTS SHOULD BE GREEN, 3 LBS/FT STEEL U-CHANNEL POSTS, BREAKAWAY, AND 12' IN LENGTH EXCEPT FOR STREET NAME SIGN POSTS.
- ALL STREET NAME POSTS SHOULD BE ROUND, 2 3/8" OD, BREAKAWAY, ALUMINUM OR STEEL, AND AT LEAST 10' IN LENGTH.

REVISED 10/7/2010

DOB APPROVAL STAMPS:

FORSBERG ENGINEERING AND SURVEYING, INC.
P.O. BOX 30575 1587 SAVANNAH HIGHWAY SUITE B
CHARLESTON, SOUTH CAROLINA 29417
(843) 571-2622 FAX (843) 571-6780
CIVIL ENGINEERING, LAND SURVEYING AND LANDSCAPE ARCHITECTURE

No.	Date	Description
	12/19/19	Issue for Pricing Check
	11/22/19	Issue for Permit
	10/11/19	Issue for Design Development
	09/13/19	Issue for 50% Design Development

Submissions & Revisions

Owner
The Beach Company
211 King Street, Suite 300
Charleston, South Carolina 29401
843.722. 2615 (Phone)
843.722.6449 (Fax)

Architect
ANTUNOVICH ASSOCIATES
ARCHITECTURE · PLANNING · INTERIOR DESIGN
224 West Huron Street, Suite 7E
Chicago, Illinois 60610
Main: (312) 266-1126
Fax: (312) 266-7123
www.antunovich.com

Structural Engineer
Britt, Peters & Associates
101 Falls Park Drive
Suite 601
Greenville, SC 29601
864.271.8869

M.E.P. & F.P. Engineers
WMA, a Salas O'Brien Company
815 South Wabash Avenue
Chicago, IL 60605
312.786.4310

Civil Engineer
Forsberg Engineering
1587 Savannah Highway
Charleston, South Carolina 29417
843.571.2622 (Phone)
843.571.6780 (Fax)

No. Description Date

Landscape Architect
DesignWorks
205 1/2 King Street
Charleston, South Carolina 29401
843.723.5525

General Contractor
Balfour Beatty Construction
306 Meeting Street, Suite 300
Charleston, South Carolina 29401
843.974.4590

Project Location
ST. MARY'S FIELD
Charleston, South Carolina

Drawing Title
CONSTRUCTION DETAILS

Seal
SOUTH CAROLINA REGISTERED PROFESSIONAL ENGINEER 29925 GADSDEN A. LINTON III

Date: 10/11/19
Drawn By: TL
Checked By: DCF
Project No: 4280-1

Drawing No.
C503

Copyright 2016

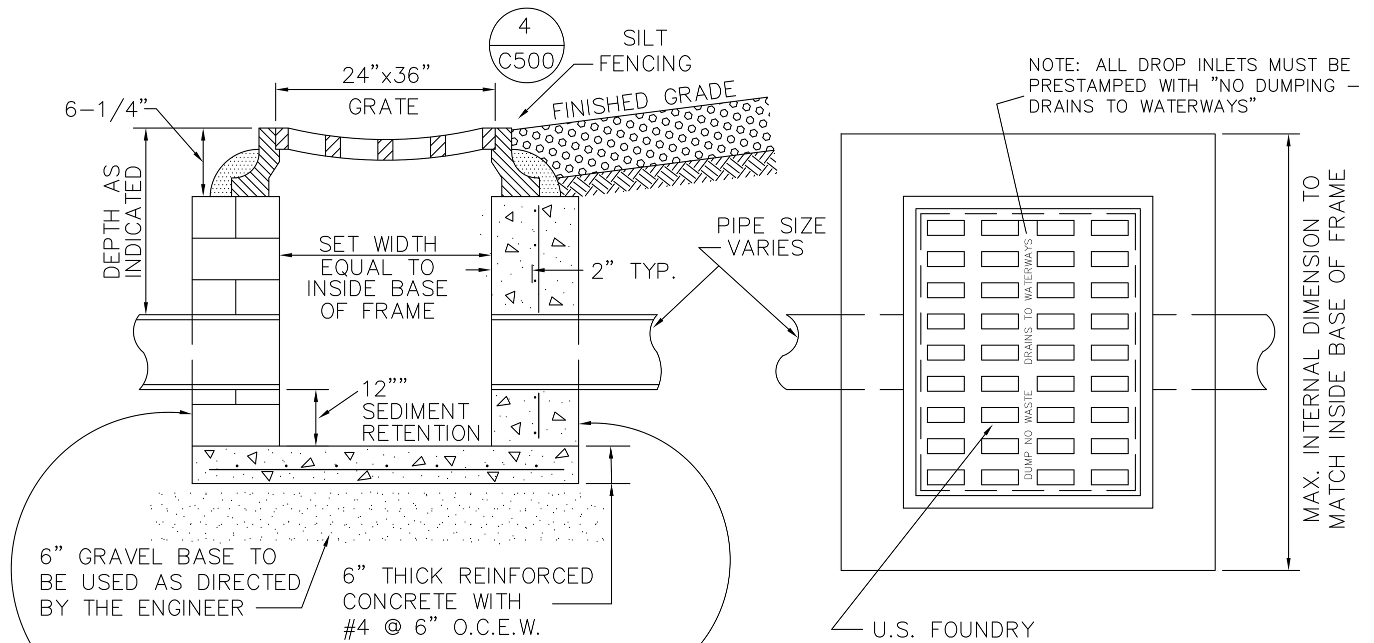

ALTERNATE 1: CONSTRUCT WITH 8" COMMON BRICK
ALTERNATE 2: CONSTRUCT WITH REINFORCED CONCRETE WITH #4 @ 8" O.C.E.W. 6" THICK
ALTERNATE 3: PRECAST BOX APPROVED BY ENGINEER

ALL MANHOLE LIDS AND CATCH BASINS SHALL CONTAIN A LABEL IDENTIFYING THE SYSTEM AS STORMWATER AND MARKED WITH AN STORMWATER MESSAGE THAT STATES: "NO DUMPING–DRAINS TO WATERWAYS"

DROP INLET DETAIL (1 / C504)

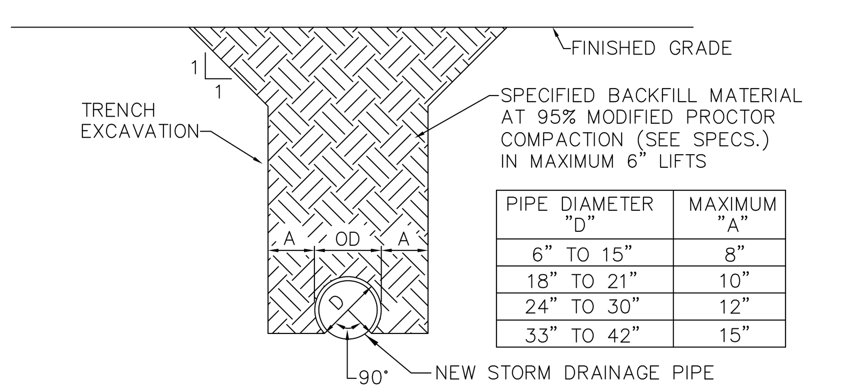

PIPE DIAMETER "D"	MAXIMUM "A"
6" TO 15"	8"
18" TO 21"	10"
24" TO 30"	12"
33" TO 42"	15"

STORM DRAIN TRENCH DETAIL (FOR RCP NOT WITHIN R/W) (2 / C504)

NOT TO SCALE

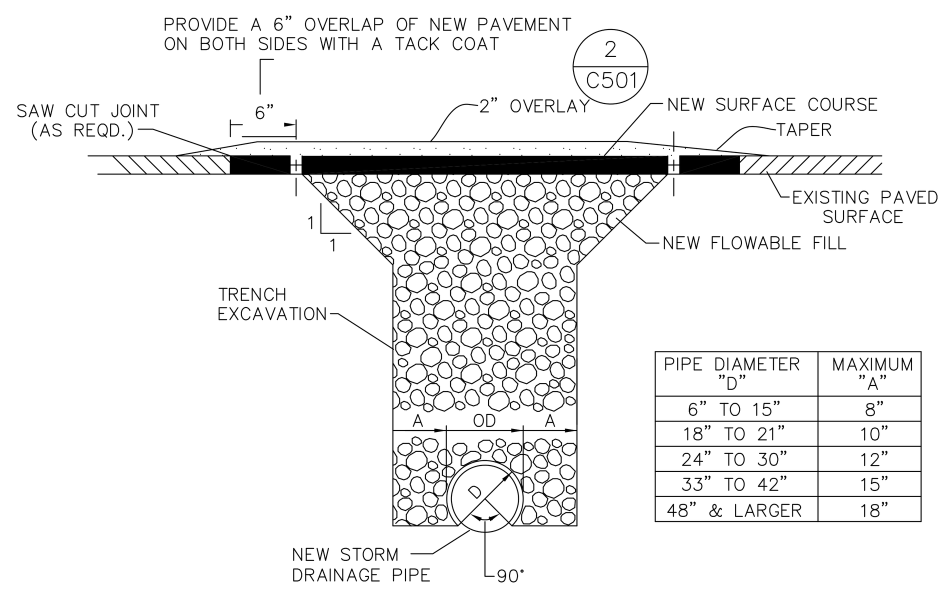

PIPE DIAMETER "D"	MAXIMUM "A"
6" TO 15"	8"
18" TO 21"	10"
24" TO 30"	12"
33" TO 42"	15"
48" & LARGER	18"

PAVEMENT TRENCHING DETAIL WITHIN CITY RIGHT OF WAY (BARRE STREET) (3 / C504)

NOT TO SCALE

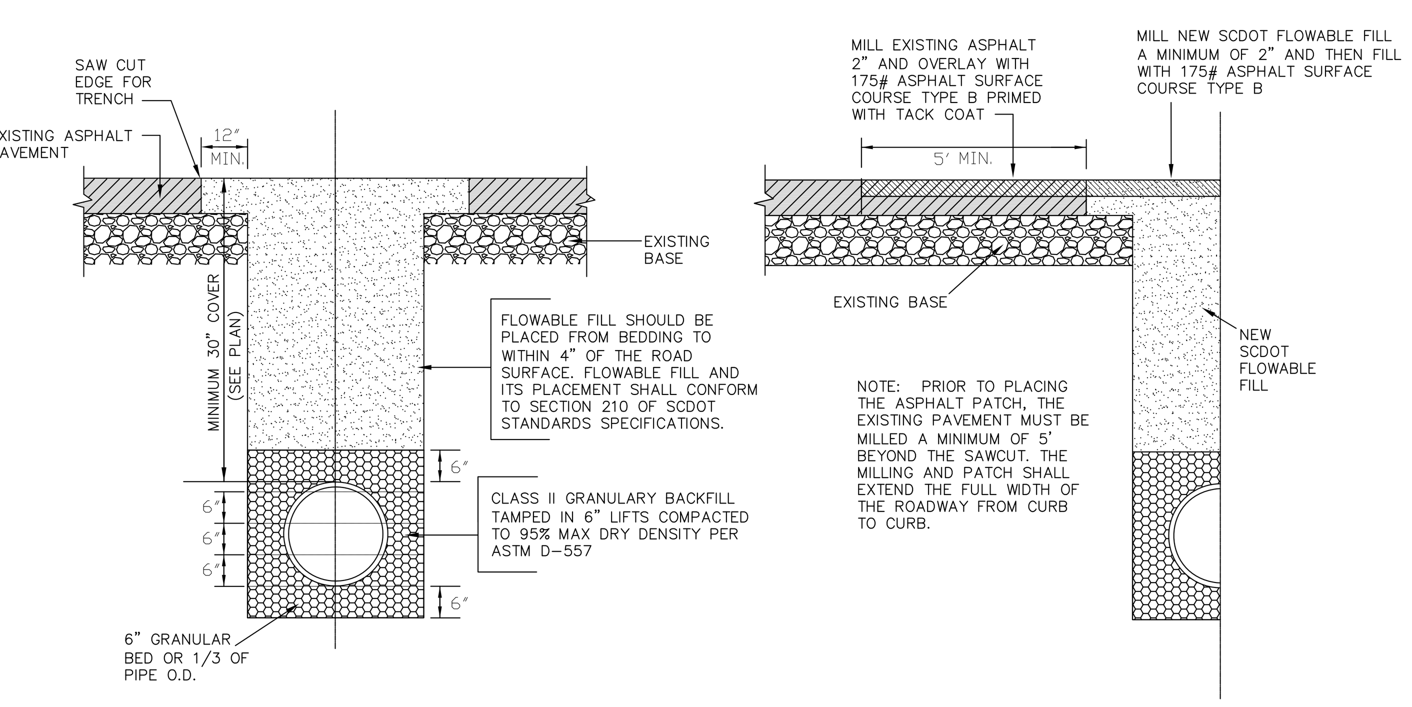

SCDOT TYPICAL UTILITY ROW CUT – BROAD ST. (4 / C504)

NOT TO SCALE

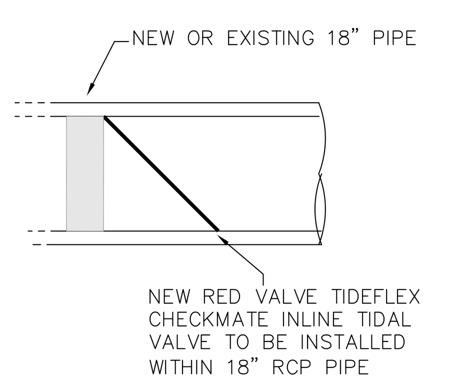

NOTE: VISIT: https://www.redvalve.com/uploads/Extranet_PDFs/Checkmate/Checkmate_IOM_102915.pdf FOR INSTALLATION INSTRUCTIONS ON NEW RED VALVE TIDEFLEX CHECKMATE INLINE TIDAL VALVE. COORDINATE WITH ENGINEER.

REDLINE TIDEFLEX VALVE (5 / C504)

NOT TO SCALE

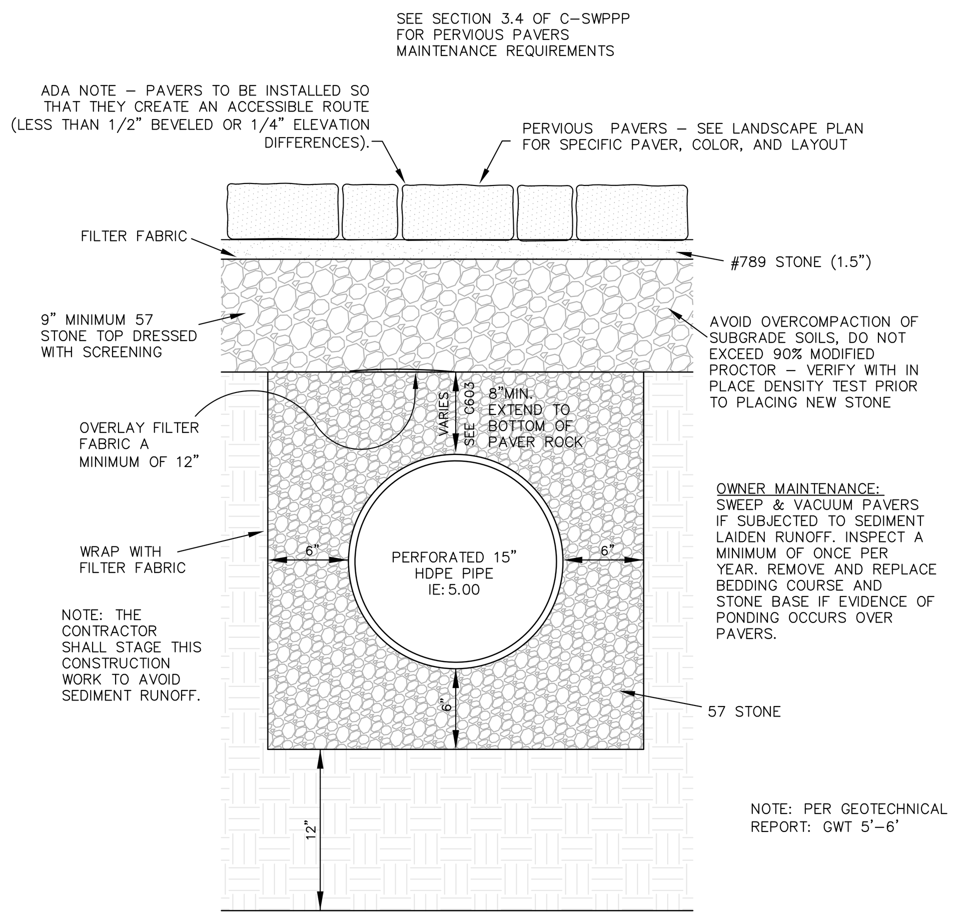

THE SITE CONTRACTOR SHALL PROTECT AREAS OF NEW PERVIOUS PAVEMENT FROM OVERCOMPACTION AND SHALL AERATE OR LOOSEN SOIL TO A MINIMUM DEPTH OF 12" AS NECESSARY TO CREATE A MAXIMUM DENSITY OF 80% MODIFIED PROCTOR. PRIOR TO INSTALLATION OF 57 STONE LAYER, THE CONTRACTOR SHALL PROVIDE 1 DENSITY TEST PER 1000 SQ.FT. AREA SHOWING DENSITY COMPLIANCE. IN LIEU OF DENSITY REQUIREMENT, THE CONTRACTOR MAY PROVIDE FIELD PERMEABILITY TEST SHOWING A MINIMUM PERMEABILITY OF 0.8IN/HR.

PERVIOUS PAVER WITH UNDERDRAIN DETAIL (6 / C504)

NOT TO SCALE

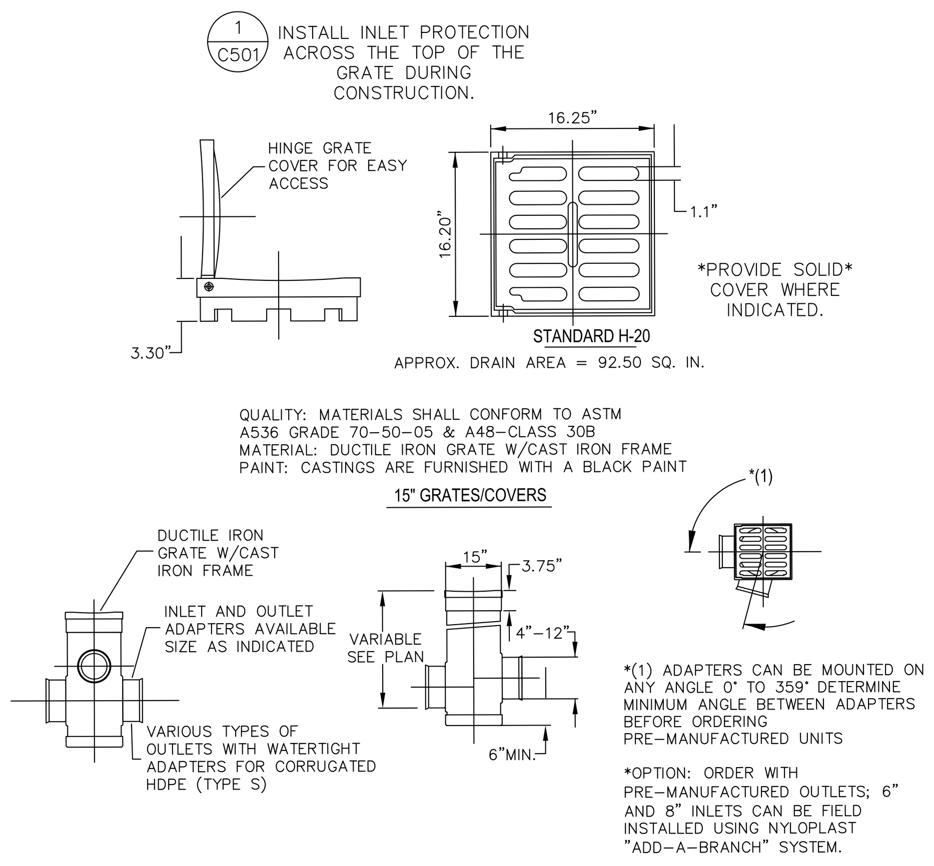

YARD INLET DRAIN (7 / C504)

NOT TO SCALE

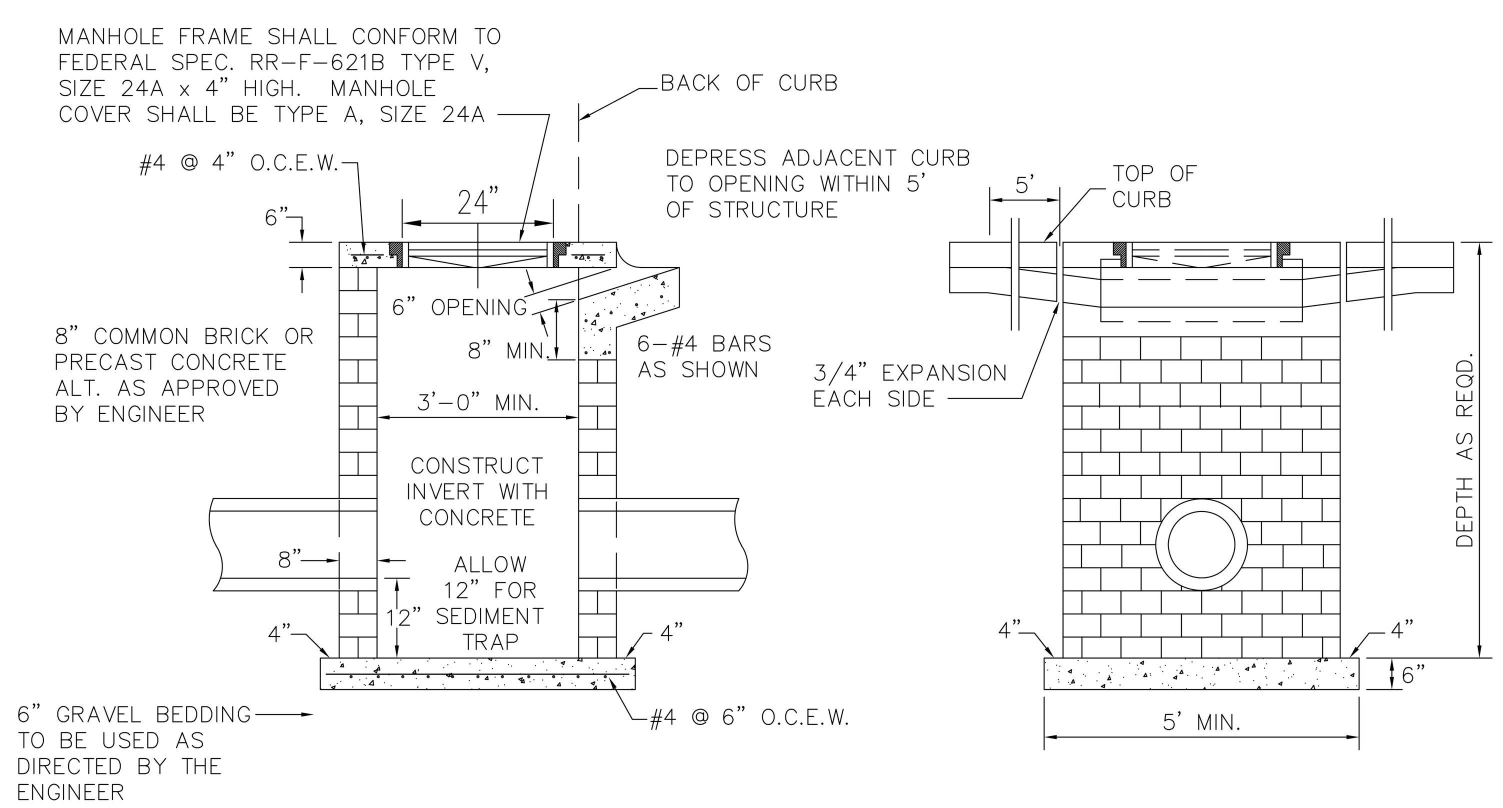

CURB INLET DETAIL (8 / C504)

NOT TO SCALE

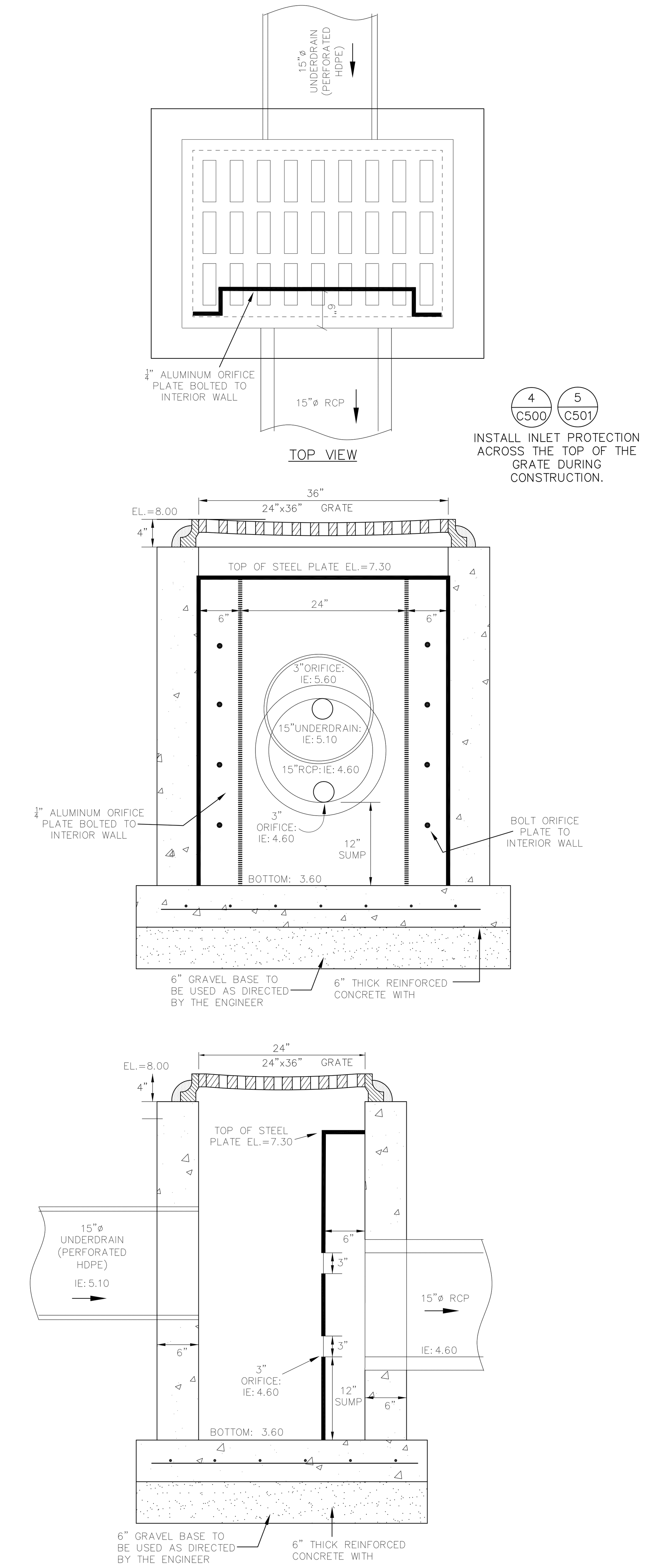

ALTERNATE 1: CONSTRUCT WITH 8" COMMON BRICK. BRICK FACE MUST BE GROUTED (PARGE COATED) ¼" TO ½" THICK BOTH SIDES.
ALTERNATE 2: CONSTRUCT WITH REINFORCED CONCRETE WITH #4 @ 8" O.C.E.W. 6" THICK
ALTERNATE 3: PRECAST BOX APPROVED BY ENGINEER

OUTLET CONTROL BOX (9 / C504)

NOT TO SCALE

BMP MAINTENANCE REQUIREMENTS:

THE OWNER IS RESPONSIBLE TO PERMANENT LONG-TERM MAINTENANCE AS AGREED TO IN THE COVENANTS AGREEMENTS. SEE CONSTRUCTION DETAILS FOR BMP MAINTENANCE REQUIREMENTS.

PERMANENT MAINTENANCE:
INLET BOXES: INLET BOXES TO BE INSPECTED ONCE A YEAR AND TO BE CLEANED IF SEDIMENT TRAP IS HALF FULL.

MANUFACTURED TREATMENT DEVICE (MTD): OWNER IS RESPONSIBLE FOR LONG TERM MAINTENANCE OF MTD. OWNER SHALL COMPLY WITH MTD MAINTENANCE REQUIREMENTS SET FORTH IN THE MANUFACTURER'S SPECIFICATIONS.

DOB APPROVAL STAMPS:

FORSBERG ENGINEERING AND SURVEYING, INC.
P.O. BOX 30575 1587 SAVANNAH HIGHWAY SUITE B
CHARLESTON, SOUTH CAROLINA 29417
(843) 571-2622 FAX (843) 571-6780
CIVIL ENGINEERING, LAND SURVEYING AND LANDSCAPE ARCHITECTURE

No.	Date	Description
	12/19/19	Issue for Pricing Check
	11/22/19	Issue for Permit
	10/11/19	Issue for Design Development
	09/13/19	Issue for 50% Design Development

Submissions & Revisions

Owner
The Beach Company
211 King Street, Suite 300
Charleston, South Carolina 29401
843.722. 2615 (Phone)
843.722.6449 (Fax)

Architect
ANTUNOVICH ASSOCIATES
ARCHITECTURE · PLANNING · INTERIOR DESIGN
224 West Huron Street, Suite 7E
Chicago, Illinois 60610
Main: (312) 266-1126
Fax: (312) 266-7123
www.antunovich.com

Structural Engineer
Britt, Peters & Associates
101 Falls Park Drive
Suite 601
Greenville, SC 29601
864.271.8869

M.E.P. & F.P. Engineers
WMA, a Salas O'Brien Company
815 South Wabash Avenue
Chicago, IL 60605
312.786.4310

Civil Engineer
Forsberg Engineering
1587 Savannah Highway
Charleston, South Carolina 29417
843.571.2622 (Phone)
843.571.6780 (Fax)

No. Description Date

Landscape Architect
DesignWorks
205 1/2 King Street
Charleston, South Carolina 29401
843.723.5525

General Contractor
Balfour Beatty Construction
306 Meeting Street, Suite 300
Charleston, South Carolina 29401
843.974.4590

Project Location
ST. MARY'S FIELD
Charleston, South Carolina

Drawing Title
CONSTRUCTION DETAILS

Seal: SOUTH CAROLINA REGISTERED PROFESSIONAL ENGINEER 29925 GADSDEN A LINTON, III

Date: 10/11/19
Drawn By: TL
Checked By: DCF
Project No: 4280-1

Drawing No.
C504

Copyright 2016

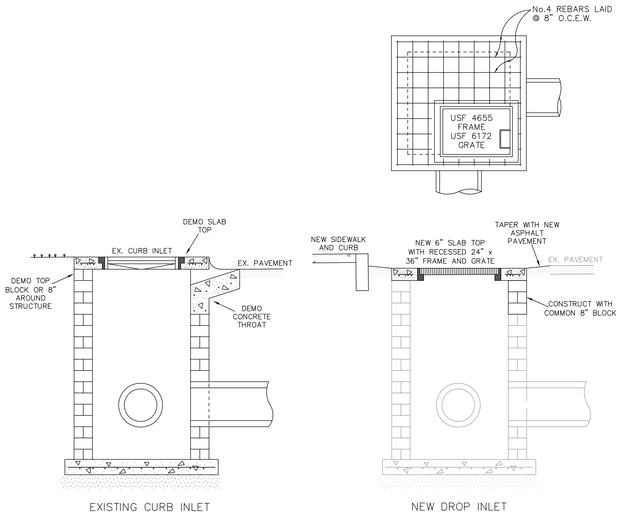

CURB INLET TO DROP INLET DETAIL

NOT TO SCALE

1
C505

NDS, INC.
851 NORTH HARVARD AVE.
LINDSAY, CA 93247
TOLL FREE: 1-800-726-1994
PHONE: (559) 562-9888
FAX: (559) 562-4488
www.ndspro.com

NDS™
WE PUT WATER IN ITS PLACE

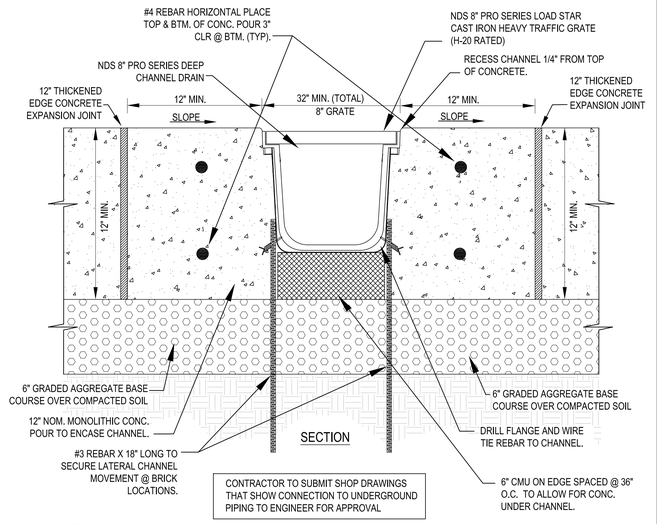

NOTES:
1. CHANNELS TO BE INSTALLED WITH GRATE. GRATE TO BE PROTECTED FROM CONCRETE POUR
2. INSTALLATION TO BE COMPLETED IN ACCORDANCE WITH MANUFACTURER'S SPECIFICATIONS.
3. DO NOT SCALE DRAWING.
4. THIS DRAWING IS INTENDED FOR USE BY ARCHITECTS, ENGINEERS, CONTRACTORS, CONSULTANTS AND DESIGN PROFESSIONALS FOR PLANNING PURPOSES ONLY.
5. ALL INFORMATION CONTAINED HEREIN WAS CURRENT AT THE TIME OF DEVELOPMENT BUT MUST BE REVIEWED AND APPROVED BY THE PRODUCT MANUFACTURER TO BE CONSIDERED ACCURATE.

PRO SERIES CHANNEL DRAIN SYSTEM

3
C505

8" PRO SERIES INSTALLATION DETAIL - HEAVY DUTY - 12" ENCASEMENT - CMU/REBAR SUSPENSION

REVISION DATE 3-5-2015

DOB APPROVAL STAMPS:

FORSBERG ENGINEERING AND SURVEYING, INC.
P.O. BOX 30575 1587 SAVANNAH HIGHWAY SUITE B
CHARLESTON, SOUTH CAROLINA 29417
(843) 571-2622 FAX (843) 571-6780
CIVIL ENGINEERING, LAND PLANNING AND LANDSCAPE ARCHITECTURE

No.	Date	Description
	12/19/19	Issue for Pricing Check
	11/22/19	Issue for Permit
	10/11/19	Issue for Design Development
	09/13/19	Issue for 50% Design Development

Submissions & Revisions

Owner
The Beach Company
211 King Street, Suite 300
Charleston, South Carolina 29401
843.722. 2615 (Phone)
843.722.6449 (Fax)

Architect
ANTUNOVICH ASSOCIATES
ARCHITECTURE - PLANNING - INTERIOR DESIGN
224 West Huron Street, Suite 7E
Chicago, Illinois 60610
Main: (312) 266-1126
Fax: (312) 266-7123
www.antunovich.com

Structural Engineer
Britt, Peters & Associates
101 Falls Park Drive
Suite 601
Greenville, SC 29601
864.271.8869

M.E.P. & F.P. Engineers
WMA, a Salas O'Brien Company
815 South Wabash Avenue
Chicago, IL 60605
312.786.4310

Civil Engineer
Forsberg Engineering
1587 Savannah Highway
Charleston, South Carolina 29417
843.571.2622 (Phone)
843.571.6780 (Fax)

No. Description Date

Landscape Architect
DesignWorks
205 1/2 King Street
Charleston, South Carolina 29401
843.723.5525

General Contractor
Balfour Beatty Construction
306 Meeting Street, Suite 300
Charleston, South Carolina 29401
843.974.4590

Project Location
ST. MARY'S FIELD
Charleston, South Carolina

Drawing Title
CONSTRUCTION DETAILS

Seal
REGISTERED PROFESSIONAL ENGINEER — SOUTH CAROLINA — 29925 — GARDEN A. LINTON, II

Date: 10/11/19
Drawn By: TL
Checked By: DCF
Project No: 4280-1

Drawing No.
C505

Copyright 2016

CHARLESTON FIRE DEPARTMENT

Fire Marshal Division

Information Bulletin

Fire Department Connections and Locations

The location of a fire department connection (FDC) is critical to the fire departments operation. The following information has been assembled as a guideline for determining the location of the connection(s).

International Fire Code (IFC), 2015 Edition, sections 903.3.7 and 912 do not specify a maximum distance between the connection and the hydrant. These sections simply state that the location shall be approved by the code official. This document is intended to provide designers and developers with the minimum acceptable criteria.

1) The fire department connection (FDC) shall be sized as follows unless alternate information has been provided as part of the system design:
   a. Residential 13R Sprinkler Systems shall utilize a single 2-1/2" NST connection per NFPA 13R 2002 6.7.4.2.
   b. NFPA 13 Sprinklers Systems shall utilize the following:
      i. Downtown Charleston in the BAR (Board of Architectural Review) area, all newly installed connections shall be a flush/low profile type per BAR ruling.
      ii. Dual (2) 2-1/2" individual elapper.
2) Connections must be installed so the bottom edge is no closer than 18", or higher than 48", above surrounding grade.
3) The surrounding grade must be level with an all-weather walking surface provided between the road and connection(s).
4) When possible, connections should be positioned at a remote location at least 40' from the structure. Building mounted connections must be positioned at or near the corner of the structure.
5) Connections must be positioned on the approach (address) side of the building. Exceptions may be granted based on physical/geographical limitations and will require additional signage.
6) Located no closer than 20 feet and no further than 100 feet from a hydrant - distances up to 200' will be considered for existing structures and conditions due to the use of large diameter hose. All measurements are taken "as the truck travels" along an approved driving surface.
7) Positioned adjacent to and facing a drivable surface or "Fire Lane".
8) No further than 10 feet behind the curb or edge of the drivable surface.
9) Protected with bollards, in accordance with IFC 312, when subject to impact or required by the Code Official.
10) Clearly labeled with signs in accordance with the Fire Marshal Division.
11) Adjacent curbing labeled as a fire lane in accordance with the requirements of the Fire Marshal Division.
12) All new fire department connections shall be provided with locking caps in accordance with IFC 912.4.1. Existing facilities with missing caps shall install locking caps. The only acceptable locking cap is the Fail-Safe FDC cap. Caps may be ordered by visiting www.failsafekeybox.com.

Please contact the City of Charleston Fire Department – Fire Marshal Division at (843)724-3429 with any questions or for additional information.

Document: IB-2015-06-24-10 Issue Date: 7/19/2010 Revision Date: 7/1/2016

2 GEORGE ST, CHARLESTON, SC 29401 • (843) 724-3429 • WWW.CHARLESTON-SC.GOV/FM

CHARLESTON FIRE DEPARTMENT

Fire Marshal Division

Information Bulletin

Fire Department Connection Signs

All Fire Department Connections shall be clearly labeled and will indicate the area served. All newly installed signs, for new projects or sign replacement, must conform to the specifications within this document. Existing signs that provide the needed information may remain until replacement is needed. A sign shall be positioned at each connection and include the following:

1) Signs shall consist of the following:
   a) 6" red letters reading "FDC" posted on a durable sign with a white background.
   b) 2" red letters below "FDC" indicating the building address, building name, or other method clearly indicating the property served by the connection. Systems serving a limited area or portion of the building will be noted on the sign.
   c) Red perimeter boarders are encouraged but not required

   Examples include but are not limited to:

FDC	FDC	FDC	FDC
151 King St	City Hall	City Hall Standpipe Only	151 S. Spring Sprinkler: Flrs 1-3

2) Placement of signs:
   a) Remote connections: Signs may be attached to the upright portion of the FDC or positioned on a post behind the FDC. Signs must remain visible and unobstructed. Signs shall be mounted on posts when shrubs or other vegetation is planted in the area so that the sign remains visible.
   b) Building mounted connections: Signs must be positioned on the building above the connection not less than 8 feet or more than 12 feet above grade.
   c) Connections that are not visible from the approach side of building may require additional signage along the front face of the building or along the primary path of entry for emergency vehicles. These signs, when required, will include a directional arrow indicating the direction of travel to the connection. Examples include:

FDC ↑ ↑ FDC

3) Alternative layouts, designs, and colors may be approved by the Fire Marshal, or his designee, on a case by case basis. Alternative color schemes must utilize reflective letters or backing.

Please contact the City of Charleston Fire Department – Fire Marshal Division at (843)724-3429 with any questions or for additional information.

Document: IB-2015-06-24-9 Issue Date: 7/19/2010 Revision Date: 6/24/2015

2 GEORGE ST, CHARLESTON, SC 29401 • (843) 724-3429 • WWW.CHARLESTON-SC.GOV/FM

FIRE SPRINKLER NOTES:

1. a. AVAILABLE FIRE FLOW AT SITE = Q(20) = 2074 GPM
   STATIC PRESSURE = 44 PSI
   RESIDUAL PRESSURE = 30 PSI W/ FLOW = 1574 GPM
   b. BASED ON TABLE B105.1(2), FIRE DEMAND FOR BUILDING IS: FIRE FLOW DEMAND FOR RESIDENTIAL BUILDING = 1000 GPM

UNIT ADDRESSING:

(THE STREET NAME "ST. MARY'S ALLEY" IS A PLACE HOLDER UNTIL A STREET NAME HAS BEEN RESERVED)

THE BUILDING THAT FACES BARRE STREET WILL HAVE THE ADDRESS: #1 BARRE STREET WITH INTERNAL UNITS #1–#7

THE BUILDING THAT FACES BROAD STREET WILL HAVE THE ADDRESS #1 ST. MARY'S ALLEY WITH INTERNAL UNITS #1–#5

THE BUILDING THAT FACES ST. MARY'S ALLEY WILL HAVE THE ADDRESS #1 ST. MARY'S ALLEY WITH INTERNAL UNITS #1–#7

GENERAL NOTES FIRE MARSHALL DIVISION

CONSTRUCTION CLASSIFICATION = TYPE IIIB 4 STORIES ABOVE GRADE, NONE BELOW, 19 RESIDENTIAL RESIDENTIAL UNITS

1. FIRE HYDRANT QUANTITY= 1 EXISTING LOCATED ON BARRE/BROAD INTERSECTION, 1 EXISTING FH AT BARRE/CANAL INTERSECTION, 1 EXISTING FH AT CANAL/GADSDEN INTERSECTION. SEE PLANS.
2. ALL EXISTING WATER MAINS ARE SHOWN ON PLAN.
3. FIRE ACCESS ROADS WILL BE PAVED SURFACE. ALL BUILDINGS ARE WITHIN 225' OF FIRE TRUCK ACCESS. ALL BUILDINGS ARE WITHIN 500' OF EXISTING OR PROPOSED HYDRANT.
4. THE ENTRY GATE WILL BE POWERED AND A KNOX BOX WITH A KEY OVERRIDE FOR THE FIRE DEPT. WILL BE PROVIDED.

GENERAL NOTES:

1. STREET ADDRESS SHALL BE POSTED IN NOT LESS THAN 4 INCH LETTERS/NUMBERS (RECOMMEND 6 INCH) IN A MANNER THAT IS PLAINLY VISIBLE FROM THE STREET OR ROAD FRONTING THE PROPERTY. INDIVIDUAL SUITES OR SUBDIVISION WITHIN THE BUILDING SHALL INCLUDE THE SUITE DESIGNATION IN A 4 INCH MINIMUM LETTER/NUMBER. STREET MARQUEES SHALL INCLUDE THE SITE ADDRESS. (IFC 505.1)

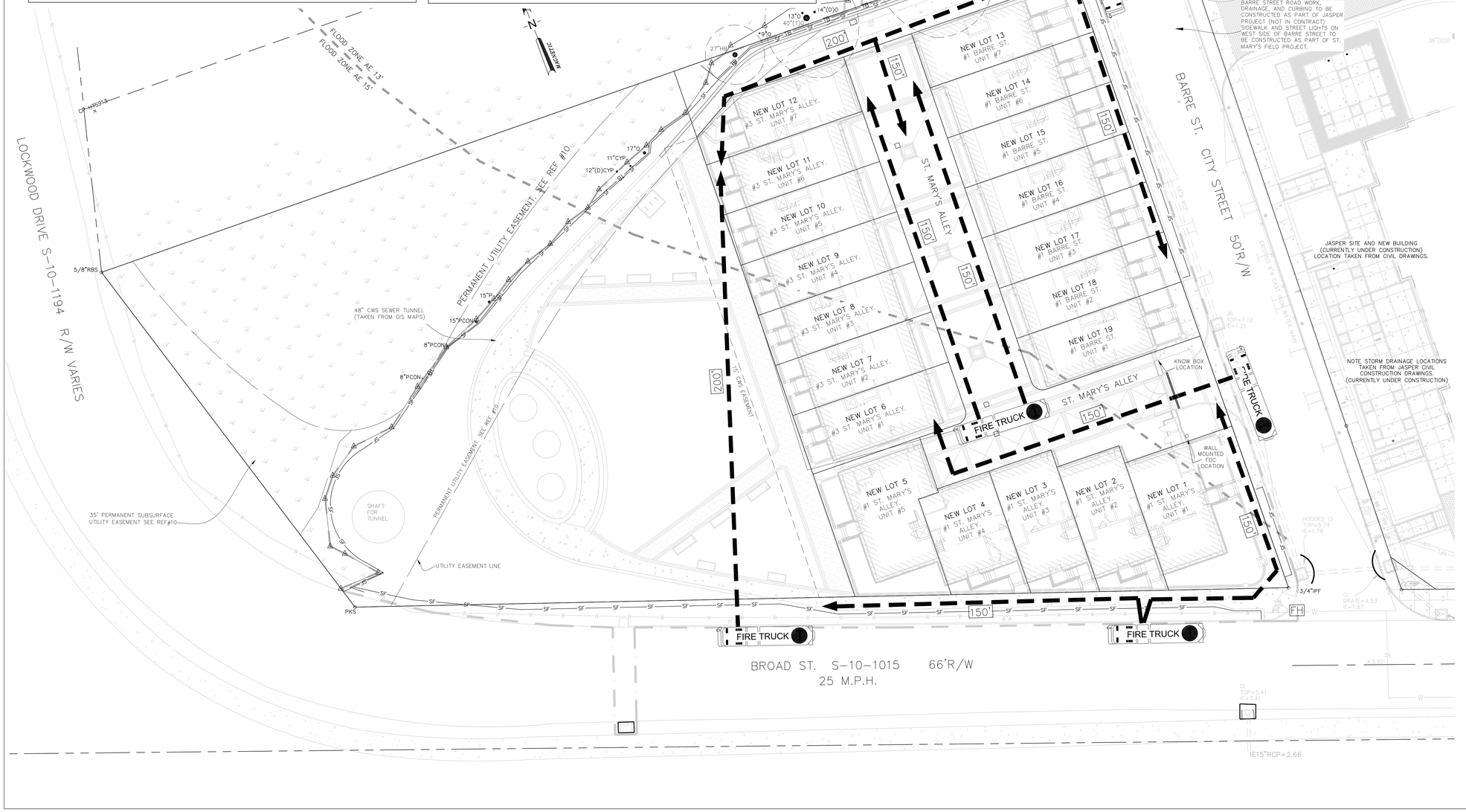

THE GENERAL CONTRACTOR(G.C.) SHALL COORDINATE ALL WORK SUCH THAT ALL SANITARY, POTABLE WATER, & FIRE LINES ARE CONNECTED AND TESTED AS REQUIRED FOR A COMPLETED PROJECT. THE FIRE SUPPLY LINE AND ANY/ALL ELEMENTS OF THE FIRE SYSTEM SUCH AS REMOTE FDC SHALL BE IN ACCORDANCE WITH ALL CURRENT CODES AND SHALL BE CERTIFIED AND TESTED AS REQUIRED BY THE G.C. OR OTHER PROFESSIONALS WORKING FOR THE G.C. THE CIVIL ENGINEER WILL PROVIDE A FIRE SPRINKLER SPECIFICATION SHEET FOR THE SUPPLY LINE FROM THE MAIN TO WITHIN 5' OF THE BUILDING. THE SUPPLY LINE SHALL BE TESTED AS REQUIRED UNDER SPEC SECTION 331100. THE CIVIL ENGINEER DOES NOT SPECIFY OR DESIGN ANY ELEMENTS OF THE FIRE CONTROL SYSTEM. ALL PORTIONS OF THE SUPPLY LINE & FIRE SYSTEM SHALL BE TESTED BY THE G.C. AND CERTIFIED IN ACCORDANCE WITH NFPA 24 AND LATEST VERSION OF THE IBC.

GRAPHIC SCALE

20 0 20 40

(IN FEET)
1 inch = 20 ft.

DOB APPROVAL STAMPS:

FORSBERG ENGINEERING AND SURVEYING, INC.
P.O. BOX 30575 1587 SAVANNAH HIGHWAY SUITE B
CHARLESTON, SOUTH CAROLINA 29417
(843) 571-2622 FAX (843) 571-6780
CIVIL ENGINEERING LAND SURVEYING
AND LANDSCAPE ARCHITECTURE

No.	Date	Description
	12/19/19	Issue for Pricing Check
	11/22/19	Issue for Permit
	10/11/19	Issue for Design Development
	09/13/19	Issue for 50% Design Development

Submissions & Revisions

Owner

The Beach Company
211 King Street, Suite 300
Charleston, South Carolina 29401
843.722. 2615 (Phone)
843.722.6449 (Fax)

Architect

ANTUNOVICH ASSOCIATES
ARCHITECTURE · PLANNING · INTERIOR DESIGN
224 West Huron Street, Suite 7E
Chicago, Illinois 60610
Main: (312) 266-1126
Fax: (312) 266-7123
www.antunovich.com

Structural Engineer

Britt, Peters & Associates
101 Falls Park Drive
Suite 601
Greenville, SC 29601
864.271.8869

M.E.P. & F.P. Engineers

WMA, a Salas O'Brien Company
815 South Wabash Avenue
Chicago, IL 60605
312.786.4310

Civil Engineer

Forsberg Engineering
1587 Savannah Highway
Charleston, South Carolina 29417
843.571.2622 (Phone)
843.571.6780 (Fax)

Landscape Architect

DesignWorks
205 1/2 King Street
Charleston, South Carolina 29401
843.723.5525

General Contractor

Balfour Beatty Construction
306 Meeting Street, Suite 300
Charleston, South Carolina 29401
843.974.4590

Project Location

ST. MARY'S FIELD

Charleston, South Carolina

Drawing Title

FIRE PROTECTION PLAN

Seal

SOUTH CAROLINA REGISTERED PROFESSIONAL ENGINEER 29925 GREGORY A. LINTON

Date:	4/18/20
Drawn By:	MSJ
Checked By:	GAL
Project No:	4280-1

Drawing No.

C700

Copyright 2016

CHARLESTON FIRE DEPARTMENT

Fire Marshal Division

Information Bulletin

Fire Department Connections and Locations

The location of a fire department connection (FDC) is critical to the fire departments operation. The following information has been assembled as a guideline for determining the location of the connection(s).

International Fire Code (IFC), 2015 Edition, sections 903.3.7 and 912 do not specify a maximum distance between the connection and the hydrant. These sections simply state that the location shall be approved by the code official. This document is intended to provide designers and developers with the minimum acceptable criteria.

1) The fire department connection (FDC) shall be sized as follows unless alternate information has been provided as part of the system design:
   a. Residential 13R Sprinkler Systems shall utilize a single 2-1/2" NST connection per NFPA 13R 2002 6.7.4.2.
   b. NFPA 13 Sprinklers Systems shall utilize the following:
      i. Downtown Charleston in the BAR (Board of Architectural Review) area, all newly installed connections shall be a flush/low profile type per BAR ruling.
      ii. Dual (2) 2-1/2" individual clapper.
2) Connections must be installed so the bottom edge is no closer than 18", or higher than 48", above surrounding grade.
3) The surrounding grade must be level with an all-weather walking surface provided between the road and connection(s).
4) When possible, connections should be positioned at a remote location at least 40' from the structure. Building mounted connections must be positioned at or near the corner of the structure.
5) Connections must be positioned on the approach (address) side of the building. Exceptions may be granted based on physical/geographical limitations and will require additional signage.
6) Located no closer than 20 feet and no further than 100 feet from a hydrant - distances up to 200' will be considered for existing structures and conditions due to the use of large diameter hose. All measurements are taken "as the truck travels" along an approved driving surface.
7) Positioned adjacent to and facing a drivable surface or "Fire Lane".
8) No further than 10 feet behind the curb or edge of the drivable surface.
9) Protected with bollards, in accordance with IFC 312, when subject to impact or required by the Code Official.
10) Clearly labeled with signs in accordance with the Fire Marshal Division.
11) Adjacent curbing labeled as a fire lane in accordance with the requirements of the Fire Marshal Division.
12) All new fire department connections shall be provided with locking caps in accordance with IFC 912.4.1. Existing facilities with missing caps shall install locking caps. The only acceptable locking cap is the Fail-Safe FDC cap. Caps may be ordered by visiting www.failsafekeybox.com.

Please contact the City of Charleston Fire Department – Fire Marshal Division at (843)724-3429 with any questions or for additional information.

Document: IB-2015-06-24-10 Issue Date: 7/19/2010 Revision Date: 7/1/2016

2 GEORGE ST, CHARLESTON, SC 29401 • (843) 724-3429 • WWW.CHARLESTON-SC.GOV/FM

CHARLESTON FIRE DEPARTMENT

Fire Marshal Division

Information Bulletin

Fire Department Connection Signs

All Fire Department Connections shall be clearly labeled and will indicate the area served. All newly installed signs, for new projects or sign replacement, must conform to the specifications within this document. Existing signs that provide the needed information may remain until replacement is needed. A sign shall be positioned at each connection and include the following:

1) Signs shall consist of the following:
   a) 6" red letters reading "FDC" posted on a durable sign with a white background.
   b) 2" red letters below "FDC" indicating the building address, building name, or other method clearly indicating the property served by the connection. Systems serving a limited area or portion of the building will be noted on the sign.
   c) Red perimeter boarders are encouraged but not required

   Examples include but are not limited to:

FDC	FDC	FDC	FDC
151 King St	City Hall	City Hall Standpipe Only	151 S. Spring Sprinkler: Flrs 1-3

2) Placement of signs:
   a) Remote connections: Signs may be attached to the upright portion of the FDC or positioned on a post behind the FDC. Signs must remain visible and unobstructed. Signs shall be mounted on posts when shrubs or other vegetation is planted in the area so that the sign remains visible.
   b) Building mounted connections: Signs must be positioned on the building above the connection not less than 8 feet or more than 12 feet above grade.
   c) Connections that are not visible from the approach side of building may require additional signage along the front face of the building or along the primary path of entry for emergency vehicles. These signs, when required, will include a directional arrow indicating the direction of travel to the connection. Examples include:

FDC ↑ ↑ FDC

3) Alternative layouts, designs, and colors may be approved by the Fire Marshal, or his designee, on a case by case basis. Alternative color schemes must utilize reflective letters or backing.

Please contact the City of Charleston Fire Department – Fire Marshal Division at (843)724-3429 with any questions or for additional information.

Document: IB-2015-06-24-9 Issue Date: 7/19/2010 Revision Date: 6/24/2015

2 GEORGE ST, CHARLESTON, SC 29401 • (843) 724-3429 • WWW.CHARLESTON-SC.GOV/FM

FIRE SPRINKLER NOTES:

1. a. AVAILABLE FIRE FLOW AT SITE = Q(20) = 2074 GPM
   STATIC PRESSURE = 44 PSI
   RESIDUAL PRESSURE = 30 PSI W/ FLOW = 1574 GPM
   b. BASED ON TABLE B105.1(2), FIRE DEMAND FOR BUILDING IS: FIRE FLOW DEMAND FOR RESIDENTIAL BUILDING = 1000 GPM

UNIT ADDRESSING:

(THE STREET NAME "ST. MARY'S ALLEY" IS A PLACE HOLDER UNTIL A STREET NAME HAS BEEN RESERVED)

THE BUILDING THAT FACES BARRE STREET WILL HAVE THE ADDRESS: #1 BARRE STREET WITH INTERNAL UNITS #1–#7

THE BUILDING THAT FACES BROAD STREET WILL HAVE THE ADDRESS #1 ST. MARY'S ALLEY WITH INTERNAL UNITS #1–#5

THE BUILDING THAT FACES ST. MARY'S ALLEY WILL HAVE THE ADDRESS #1 ST. MARY'S ALLEY WITH INTERNAL UNITS #1–#7

GENERAL NOTES FIRE MARSHALL DIVISION

CONSTRUCTION CLASSIFICATION = TYPE IIIB 4 STORIES ABOVE GRADE, NONE BELOW, 19 RESIDENTIAL RESIDENTIAL UNITS

1. FIRE HYDRANT QUANTITY= 1 EXISTING LOCATED ON BARRE/BROAD INTERSECTION, 1 EXISTING FH AT BARRE/CANAL INTERSECTION, 1 EXISTING FH AT CANAL/GADSDEN INTERSECTION. SEE PLANS.
2. ALL EXISTING WATER MAINS ARE SHOWN ON PLAN.
3. FIRE ACCESS ROADS WILL BE PAVED SURFACE. ALL BUILDINGS ARE WITHIN 225' OF FIRE TRUCK ACCESS. ALL BUILDINGS ARE WITHIN 500' OF EXISTING OR PROPOSED HYDRANT.
4. THE ENTRY GATE WILL BE POWERED AND A KNOX BOX WITH A KEY OVERRIDE FOR THE FIRE DEPT. WILL BE PROVIDED.

GENERAL NOTES:

1. STREET ADDRESS SHALL BE POSTED IN NOT LESS THAN 4 INCH LETTERS/NUMBERS (RECOMMEND 6 INCH) IN A MANNER THAT IS PLAINLY VISIBLE FROM THE STREET OR ROAD FRONTING THE PROPERTY. INDIVIDUAL SUITES OR SUBDIVISION WITHIN THE BUILDING SHALL INCLUDE THE SUITE DESIGNATION IN A 4 INCH MINIMUM LETTER/NUMBER. STREET MARQUEES SHALL INCLUDE THE SITE ADDRESS. (IFC 505.1)

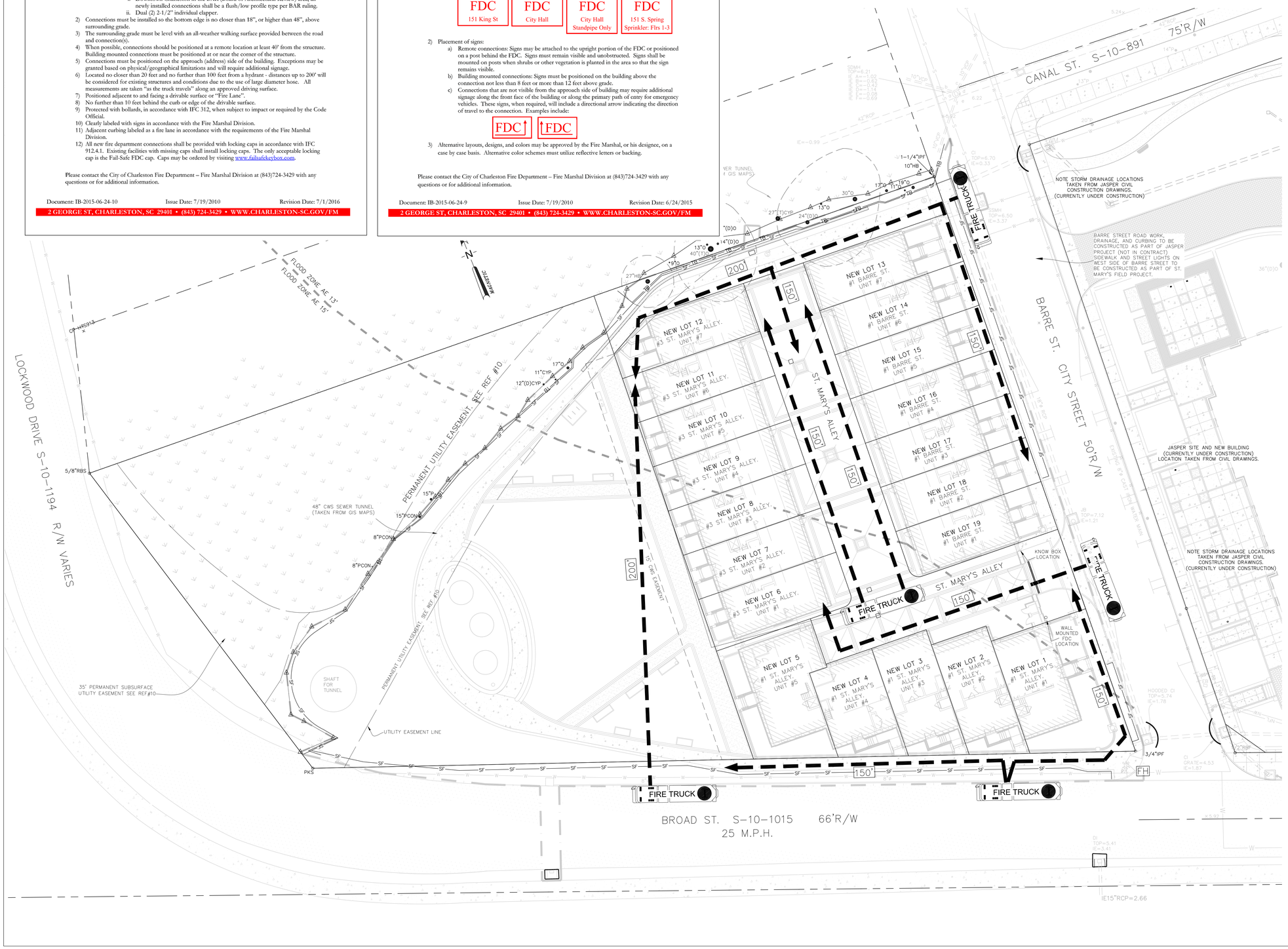

THE GENERAL CONTRACTOR(G.C.) SHALL COORDINATE ALL WORK SUCH THAT ALL SANITARY, POTABLE WATER, & FIRE LINES ARE CONNECTED AND TESTED AS REQUIRED FOR A COMPLETED PROJECT. THE FIRE SUPPLY LINE AND ANY/ALL ELEMENTS OF THE FIRE SYSTEM SUCH AS REMOTE FDC SHALL BE IN ACCORDANCE WITH ALL CURRENT CODES AND SHALL BE CERTIFIED AND TESTED AS REQUIRED BY THE G.C. OR OTHER PROFESSIONALS WORKING FOR THE G.C. THE CIVIL ENGINEER WILL PROVIDE A FIRE SPRINKLER SPECIFICATION SHEET FOR THE SUPPLY LINE FROM THE MAIN TO WITHIN 5' OF THE BUILDING. THE SUPPLY LINE SHALL BE TESTED AS REQUIRED UNDER SPEC SECTION 331100. THE CIVIL ENGINEER DOES NOT SPECIFY OR DESIGN ANY ELEMENTS OF THE FIRE CONTROL SYSTEM. ALL PORTIONS OF THE SUPPLY LINE & FIRE SYSTEM SHALL BE TESTED BY THE G.C. AND CERTIFIED IN ACCORDANCE WITH NFPA 24 AND LATEST VERSION OF THE IBC.

DOB APPROVAL STAMPS:

FORSBERG ENGINEERING AND SURVEYING, INC.
P.O. BOX 30575 1587 SAVANNAH HIGHWAY SUITE B
CHARLESTON, SOUTH CAROLINA 29417
(843) 571-2622 FAX (843) 571-6780
CIVIL ENGINEERING LAND SURVEYING LANDSCAPE ARCHITECTURE AND LANDSCAPE ARCHITECTURE

No.	Date	Description
	12/19/19	Issue for Pricing Check
	11/22/19	Issue for Permit
	10/11/19	Issue for Design Development
	09/13/19	Issue for 50% Design Development

Submissions & Revisions

Owner

The Beach Company
211 King Street, Suite 300
Charleston, South Carolina 29401
843.722. 2615 (Phone)
843.722.6449 (Fax)

Architect

ANTUNOVICH ASSOCIATES
224 West Huron Street, Suite 7E
Chicago, Illinois 60610
Main: (312) 266-1126
Fax: (312) 266-7123
www.antunovich.com

Structural Engineer

Britt, Peters & Associates
101 Falls Park Drive
Suite 601
Greenville, SC 29601
864.271.8869

M.E.P. & F.P. Engineers

WMA, a Salas O'Brien Company
815 South Wabash Avenue
Chicago, IL 60605
312.786.4310

Civil Engineer

Forsberg Engineering
1587 Savannah Highway
Charleston, South Carolina 29417
843.571.2622 (Phone)
843.571.6780 (Fax)

Landscape Architect

DesignWorks
205 1/2 King Street
Charleston, South Carolina 29401
843.723.5525

General Contractor

Balfour Beatty Construction
306 Meeting Street, Suite 300
Charleston, South Carolina 29401
843.974.4590

Project Location

ST. MARY'S FIELD

Charleston, South Carolina

Drawing Title

FIRE PROTECTION PLAN

Seal

REGISTERED PROFESSIONAL ENGINEER 29925 SOUTH CAROLINA LINDSEY A. LINTON

Date: 4/18/20
Drawn By: MSJ
Checked By: GAL
Project No: 4280-1

Drawing No.

C700

Copyright 2016

ADA NOTES:

1. ALL AMENITIES MUST BE ADA COMPLIANT. a.GATE LATCHES - GATE LATCHES SHALL PROVIDE ADA ACCESSIBILITY.
2. THE PUBLIC RIGHT-OF-WAY MUST REMAIN ADA COMPLIANT DURING CONSTRUCTION OR AN ALTERNATIVE ROUTE MUST BE PROVIDED.
3. PUBLIC TRANSPORATION/BUS STOPS IN THE RIGHT OF WAY MUST REMAIN WHEN THE PROJECT IS COMPLETED.
4. ALL GROUNDS AND LANDSCAPING PAVERS TO BE ADA COMPLIANT.
5. DOORS MUST HAVE LESS THAN 5 POUNDS OF PULL FORCE PER ADA UNLESS THE DOOR IS FIRE RATED. SEE ARCHITECTURAL SPECIFICATIONS.
6. ALL SIDEWALKS WILL NOT EXCEED 20:1 SLOPE OR 50:1 CROSS SLOPE.
7. ALL GATES AND DOORWAYS ALONG ADA ACCESSIBLE ROUTE WILL BE ADA COMPLIANT. NOTE THAT MAXIMUM DOOR WEIGHT IS 5 LBS UNLESS IT IS A FIRE RATED DOOR.
8. OF SPACES PROVIDED ON SITE ARE HANDICAP ACCESSIBLE SPACES
9. % OF ALL ENTRANCES WILL BE ADA ACCESSIBLE.
10. THE CONTRACTOR TO ENSURE THE PUBLIC RIGHT OF WAY WILL REMAIN ADA COMPLIANT DURING CONSTRUCTION OR PROVIDE AN ALTERNATIVE ROUTE.
11. IF THERE IS A BUS STOP IN THE RIGHT OF WAY WHEN THE PROJECT STARTS, IT MUST BE THERE WHEN THE PROJECT IS COMPLETED

ADA NOTES:

THE PUBLIC RIGHT OF WAY MUST BE ADA COMPLIANT DURING CONSTRUCTION OR AN ALTERNATIVE ROUTE MUST BE PROVIDED..

THE EXISTING CARTA BUS STOP LOCATED ALONG BROAD STREET IN FRONT OF THE EXISTING SGT. JASPER BUILDING THAT SHALL REMAIN IN PLACE AT PROJECT COMPLETION.

NEW MAIL KIOSK WILL BE ADA COMPLIANT.

ALL AMENITIES SHALL BE ADA COMPLIANT. ALL ENTRANCES ARE ACCESSIBLE.

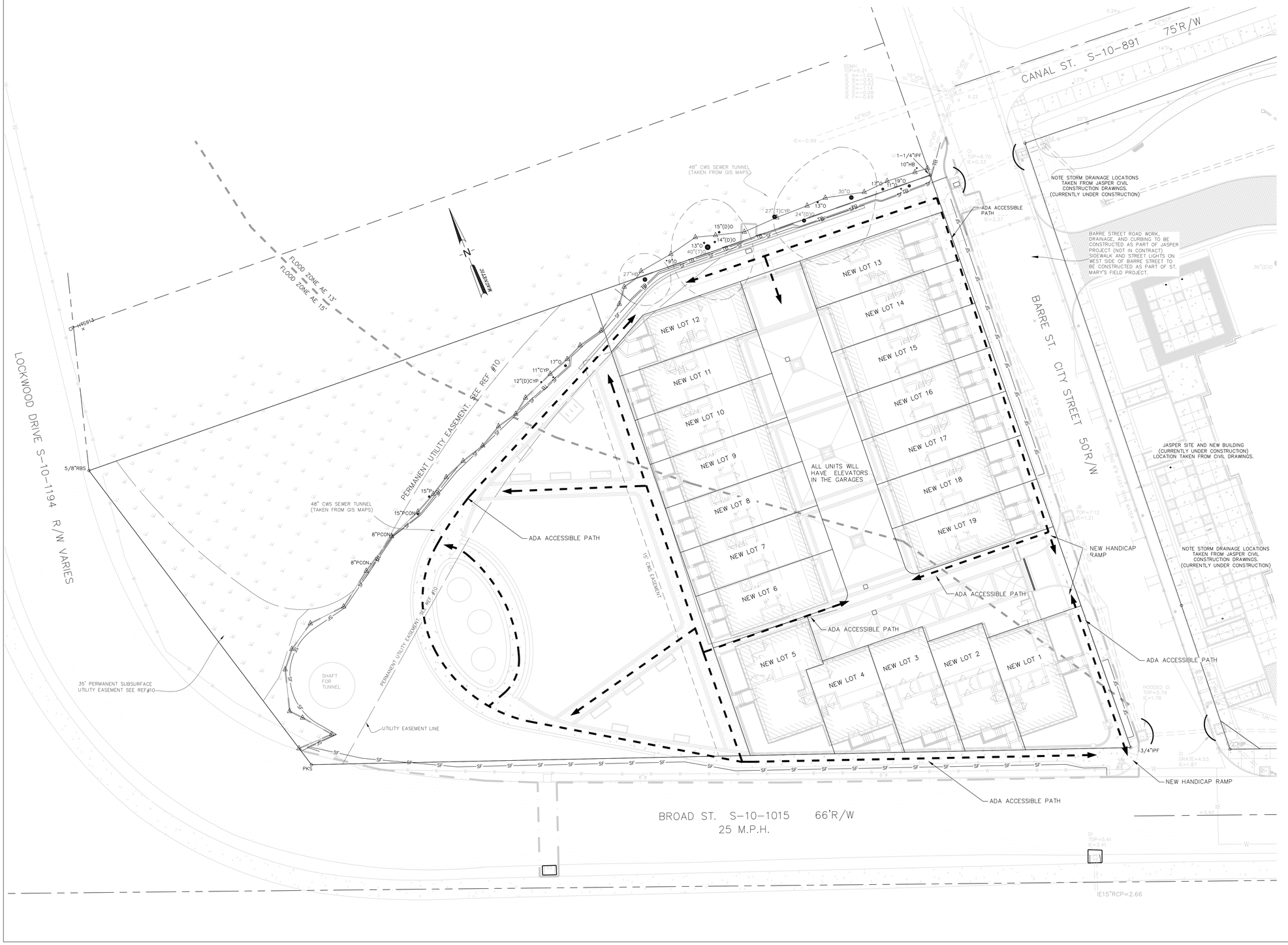

DOB APPROVAL STAMPS:

FORSBERG ENGINEERING AND SURVEYING, INC.
P.O. BOX 30575 1587 SAVANNAH HIGHWAY SUITE B
CHARLESTON, SOUTH CAROLINA 29417
(843) 571-2622 FAX (843) 571-6780
CIVIL ENGINEERING, LAND SURVEYING AND LANDSCAPE ARCHITECTURE

No.	Date	Description
	12/19/19	Issue for Pricing Check
	11/22/19	Issue for Permit
	10/11/19	Issue for Design Development
	09/13/19	Issue for 50% Design Development

Submissions & Revisions

Owner

The Beach Company
211 King Street, Suite 300
Charleston, South Carolina 29401
843.722. 2615 (Phone)
843.722.6449 (Fax)

Architect

ANTUNOVICH ASSOCIATES
ARCHITECTURE · PLANNING · INTERIOR DESIGN
224 West Huron Street, Suite 7E
Chicago, Illinois 60610
Main: (312) 266-1126
Fax: (312) 266-7123
www.antunovich.com

Structural Engineer

Britt, Peters & Associates
101 Falls Park Drive
Suite 601
Greenville, SC 29601
864.271.8869

M.E.P., & F.P. Engineers

WMA, a Salas O'Brien Company
815 South Wabash Avenue
Chicago, IL 60605
312.786.4310

Civil Engineer

Forsberg Engineering
1587 Savannah Highway
Charleston, South Carolina 29417
843.571.2622 (Phone)
843.571.6780 (Fax)

Landscape Architect

DesignWorks
205 1/2 King Street
Charleston, South Carolina 29401
843.723.5525

General Contractor

Balfour Beatty Construction
306 Meeting Street, Suite 300
Charleston, South Carolina 29401
843.974.4590

Project Location

ST. MARY'S FIELD

Charleston, South Carolina

Drawing Title

ADA PLAN

Seal

SOUTH CAROLINA REGISTERED PROFESSIONAL ENGINEER 29925 GAGDON A. LINTON III

Date:	4/18/20
Drawn By:	MSJ
Checked By:	GAL
Project No:	4280-1

Drawing No.

C701

Copyright 2016